GRID-TIED PHOTOVOLTAIC (PV) POWER SYSTEMS

Tracking System

Fixed Photovoltaic Panels

Nellis AFB Solar Power Plant, NV

[Strategy]

Brief Description

Providing grid-tied photovoltaic (PV) power is a process that includes programming, planning and design of PV systems to accommodate both energy savings and energy security, including total load expected to be served by the system, electrical load management, requirements for connection to the electrical grid/utility and/or a micro-grid, battery banks, and other features that must be included in the decision making process. PV systems also have their limitations.

Programming

- The 1391 document needs to mention the PV requirement, including the required power production in MW or KW, and if known, which PV technology/system is desired. Use current PV system unit prices for your area. Consider all supporting electrical equipment – inverters, combiner boxes, DC disconnects, pad mounted transformers, pad mounted switch, duct, underground power cables and manholes – sites will vary as to their required development.
- Life Cycle Cost Analysis (including all rebates, credits, incentives, and Renewable Energy Certificates (RECs) if eligible) should be done for all PV systems in the 1391 to ensure the savings to investment ratio (SIR) exceeds 1.0.
- To obtain Energy Conservation Investment Program (ECIP) funding, submit project documentation through the normal Military Construction review and verification process, to the Office of the Deputy Under Secretary of Defense (Installations & Environment) Facilities Energy and Privatization Directorate (ODUSD (I&E) FE&P) on the highest priority projects. Generally the projects with the highest SIR and best payback periods receive ECIP funding. For ECIP projects, the 1391 will say “ECIP” in block 4 PROJECT TITLE.

Planning

Some key issues to consider when planning PV systems include:

- Energy Production / Reduce Energy Costs.
- Site the PV System – obtain solar weather data, sun orientation (southerly) & exposure to determine preferred PV sites.
- A reliable website for PV weather data generated by the National Renewable Energy Labs can be found at http://gisatnrel.nrel.gov/PVWatts_Viewer/index.html
- Find open space for PV system – a site with no shading.
- Will it be a ground mount, roof mount, or canopy type (carport) system? Inspect existing structure and roof conditions to insure adequate for new PV system installation.
- Energy Conservation Investment Program (ECIP) Funding.
- Net Zero Military Installations.
- LEED Compliance.
- Conserve natural resources and improve air quality.
- Provide a showcase for PV projects on military installations.
- Micro-grids (help facilitate "islanding" of the military installation).
- Utility Incentives / Rebates. WWW.DSIREUSA.ORG is the definitive resource for credits, incentives and rebates, per state.

Design

- Follow National Electrical Code, Articles 690 and 705. Many changes are planned for these articles in the 2014 National Electrical Code. Maximum input up to 25% of rated buss size.
- Follow ANSI C2 - National Electrical Safety Code (NESC).
- Follow ICC and UBC building codes.
- Follow IEEE 1547-2003: Recommended Practice for Utility Interface of Photovoltaic (PV) Systems.
- Follow UL Standard 1703, Flat-Plate Photovoltaic Modules and Panels.
- Perform a site survey to find an open site near utility disconnect location.
- Avoid all obstructions that could shade the array, like vents, trees, etc. The shading affect on an array has a far greater negative impact than just the percentage impact of shaded area. An analysis shall be performed to determine spacing requirements and sun exposure for a given tilt angle, with respect to maximizing KW-HR output.
- Select inverter AC voltage to match building voltage - avoid step down transformers which would create excess losses in the system.
- Use a high efficiency inverter, compliant with UL 1471.
- Size array to operate at the highest code-allowable DC voltage for the inverter (provides greatest temperature, degradation and shade tolerance for the life of the system).
- Coordinate with utility from the start regarding rebates, grid-tied systems, and utility requirements related to grid-tied systems such as safety and security.

- Explain to the military installation (DPW, BCE, etc.) what the grid-tied PV system can and cannot do, such as what happens during a utility outage.
- Consider connecting the PV system into a micro-grid. A micro-grid is a small scale version of the electrical grid—which can be tied to the larger grid, yet retain the ability to independently supply energy if the larger grid experiences power interruptions. Micro-grids can take advantage of local power resources (small wind, PV, energy storage systems, engine-generator systems, etc.) rather than relying on large-scale centrally generated electricity.
- Consider tracking systems. Look at tracking vs, non-tracking systems, factoring in relative maintenance costs. Tracking systems lead to fewer panels spaced further apart, but they produce more energy per panel. For fixed real estate available and other factors like mounting options determine which one makes sense. Long term outlook - tracking systems require more maintenance to keep working.
- PV Software is available to assist in designing PV systems considering weather data, orientation, longitude/latitude, etc. PVWATTS (basic, dartboard accuracy), and PVSYST (better, harder, includes long term annual degradation) are a couple examples.
- Determine Data Acquisition System required for performance verification tracking, usage, credits, etc.

[Energy and Environment]

<u>Energy Savings</u>

- Save money on utility costs. The total load of the military installation fed by utility will be reduced.
- Peak shaving. Through PV system or associated energy storage device, achieve peak shaving during utility's higher energy rate periods.
- Battery Banks. Store energy to be used during higher utility rate periods or during a power outage.
- Obtain LEED points for LEED compliance, by producing a percentage of the facility's energy consumption with a PV system.
- Utilize renewable energy, conserving natural resources and improving air quality.

<u>Energy Security (Connection to the electrical grid/utility)</u>

- "Limitations" due to energy security requirements - Just because you have a PV system on your military installation, that does not mean you can use it to generate power during a power outage. For example, say the utility lines to the facility are down and the sun is shining but your PV system is not operational due to required safety operations, an unfortunate case yet one in which the PV system is operating as required…
- Due to utility company regulations, all grid-tie solar power systems must have inverters with a safety feature that will automatically disconnect them from the power grid when the grid goes down in accordance with UL 1741 (known as the islanding effect). This is to protect power line workers from being electrocuted by a solar power system feeding power back to the grid. It would violate electrical code requirements to circumvent the

agreed operations with the utility. There are several significant system changes that would be required to provide emergency power via the PV system, such as monitoring and controls which will significantly increase cost and complexity of the project.

- In order to allow the existing PV system to operate in the event of an interruption of power from the grid, the existing PV system would require modifications to convert it to a "grid-tie system, typically with battery back-up and a central generator plant system". Key modifications include the following:

  - Automatic Transfer switches
  - Storage Battery Bank (an Uninterruptible Power Supply configuration (UPS)) with storage facility and battery duration determined (i.e. 1 Hr, 2 Hr battery time, etc.) Batteries can also help when clouds briefly shield the PV array to offset a "PV system power production drop". Battery UPS backup systems for very long term duration is not recommended due to cost and increased maintenance requirements.
  - Utility-Interactive with Backup Power Mode Inverter(s) – Can operate in conjunction with utility but provide backup power if utility fails (a.k.a. on grid / off grid type).
  - Back-up generator (appropriately sized) with load & control management that can emulate a utility without effecting safety. Need to investigate this with generator and control manufacturers
  - Sophisticated monitoring , control and load management system
  - Additional maintenance requirements

Load Management Using Microgrids

- A microgrid manages multiple distributed electricity generation and storage resources via intelligent load controls and metering. It promotes sustainability by using renewable power generation and storage to optimally balance energy production and storage, blended together with diesel and/or natural gas generator use and fuel cell use, in order to meet the electrical demand load within a local region such as a military installation.
- Microgrids can reduce outages to critical loads within the Microgrid by disconnecting from the Macrogrid (utility) in the event of a fault (islanding), and by turning off dispatch able loads, if applicable. In certain cases, they can also provide emergency power outside the Microgrid to supplement reduced grid supply during a contingency.
- Ideally, a microgrid can quickly switch between operating on or off the larger grid: when the grid offers cheap electricity, the microgrid uses it. If prices rise or a power failure occurs, the microgrid can isolate itself and operate using its own power generation and -storage resources. While the microgrid concept is gaining popularity, much of the cutting-edge hardware, software, and control systems necessary to implement microgrids have yet to be field tested/demonstrated.
- A microgrid can interface with an Energy Management and Control System (EMCS) to interact with and control building systems such as HVAC and lighting.

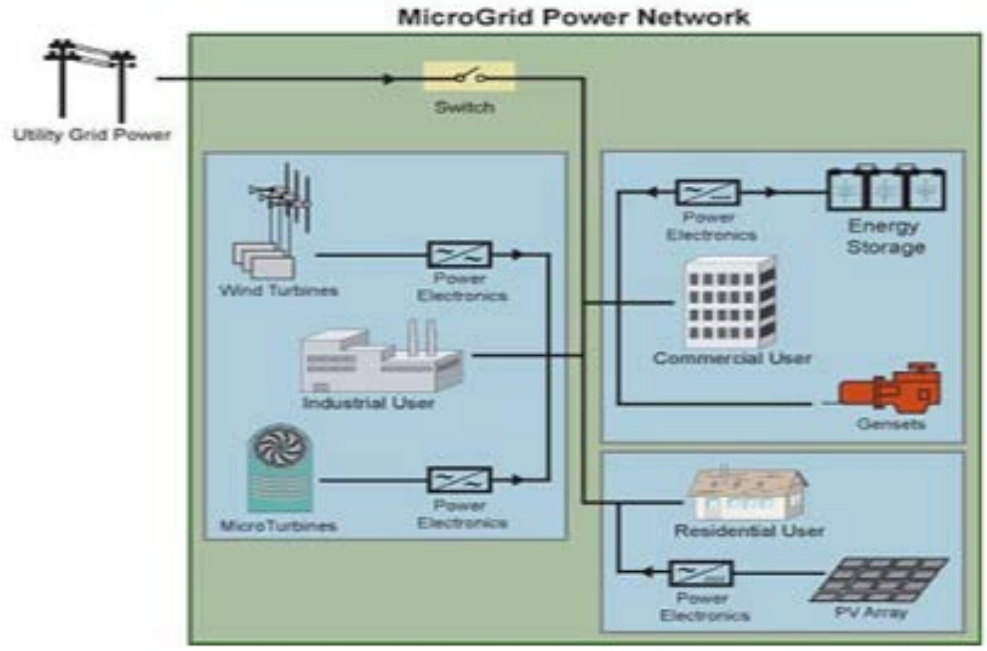

[Product and Economics]

<u>Photovoltaic (PV) (Solar) Panels</u>

Monocrystalline PV Panel

Polycrystalline PV Panels

- When photovoltaic panels convert the sun's energy into electricity, the power generated is direct current (DC).
- Listed to UL 1703. Monocrystalline panels have a higher (efficiency up to 17%) output per kW rating but tend to be slightly more expensive than polycrystalline panels (efficiency up to 14%) ; monocrystalline wafer is black, polycrystalline wafer has a dark blue color. Crystalline PV is here to stay. Panel unit cost is currently around $2.35 (and higher)/Watt.

- Only about 5% of PV panels worldwide are made in the USA. It is about the same percentage for inverters. Projects require compliance with the "Buy American Act".

- Thin film has high internal resistance – better at lower light levels. Cadmium telluride is the best thin film (amorphous). Thin film has claimed for 25 years that it will outperform crystalline PV – has not happened yet. Thin film is close to twice as expensive as crystalline panels.

- Keep PV panels clean. Dirt and dust forms a type of "shade" that reduces power output. Wash panels 1 time per month maximum, but not less than 1 time per year (July 4).

- Panel ratings are based on factory (peak value of solar irradiance = 1000 watts/sq. meter) conditions. Actual power production is less than the panel rating (based on nominal/average value of solar irradiance = 800 watts/sq. meter – roughly half of PV energy is delivered below and half above this "nominal" value). For example, a 150 watt module will deliver around 126 watts dc.

- The "sample" irradiance graph below demonstrates how the output of a PV panel (or array) can vary throughout the day with unpredictable environmental effects like cloud cover. The important idea stressed here is that a PV system's output cannot be held constant like it can be for other power sources like diesel generators, or some other renewable power sources like hydropower.

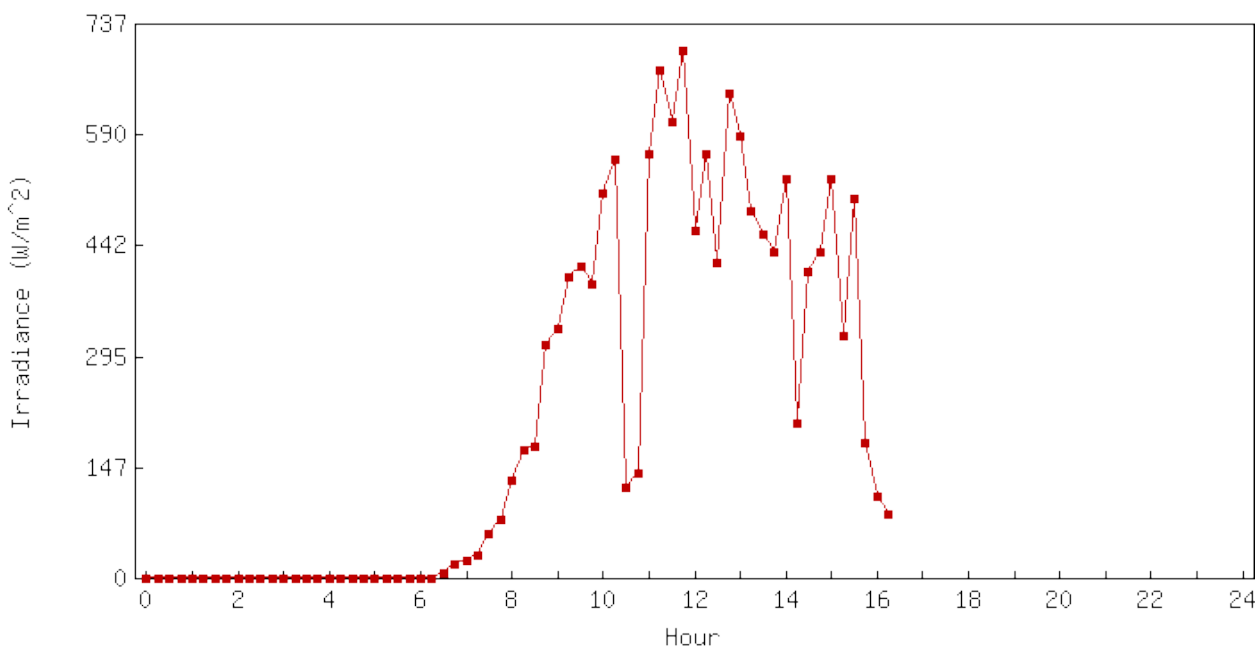

Combiner Boxes

Cooper Bussman Solar Combiner Box

- Electrically combine inputs from multiple PV array panels or strings into one circuit.
- Fuse at 125% x 125% = 156% of maximum load per NEC Art. 690 (also allows for occasional irradiance values over 1000 watts/sq. meter).
- Reverse polarizing in the combiner box is the easiest mistake to make during overall PV system installation.

DC Disconnects

- Switches PV DC circuits. Located between combiner boxes and inverter. UL 98 listed.
- DC circuits require an increased air gap. This is accomplished by breaking the ungrounded conductor twice in series to get the 600 VDC rating. 600 VDC disconnects must be wired following manufacturer's recommendations.

Inverters

Inverter by Schneider Electric

- Converts PV DC input to AC output to the grid. Listed to UL 1741. Label should say input voltage range and maximum continuous output power at 40 degrees C.
- Can provide integral monitoring with software of the PV system.
- Match array to inverter limitations. Be aware of voltage limits of inverter and how they interact with the array. Think about shading, temperature and degradation when selecting inverter.
- The inverter is the weak link in reliability in the PV system – most complex equipment, power electronics failures, unwarranted fault lockouts.
- Install inverter near electrical service entrance – minimize voltage drop and losses.

- Field experience (product history) is most important for reliability and maximum power tracking.
- Utility Interactive or Grid Connected Inverter(s) – Operate only in conjunction with the electric utility, synchronizing the output phase, frequency and voltage with the utility. Directly connected to the PV array.
- Stand-Alone Inverter(s) – Operate from batteries, independent from the electric utility. Can provide control/protection functions for hybrids.
- Utility-Interactive with Backup Power Mode Inverter(s) – Can operate in conjunction with utility but provide backup power if utility fails (a.k.a. on grid / off grid type). Label should say it is "Utility-Interactive".
- Power conversion efficiencies (Pac/Pdc) range from high efficiency (peak>94%; most power per module $) to low efficiency (peak >91%; allows wider input voltage range or better maximum PV power tracking). Energy efficiency is another way to evaluate inverter performance (Eac/Edc).
- Advantages of central inverters (one per array) are lower labor to install and replace. Central inverters are the lower installed cost option today. Disadvantage is reduced power output from arrays due to shadowing or soiling (bird droppings, dust, pollen, etc).
- Advantages of micro-inverters (one on each PV panel) are panel level power optimization. Disadvantages are cost of additional 277/480 volt or 120/208 volt panel boards, and cost of equipment & labor to replace multiple inverters across an entire array in the future.
- If you need to power small isolated loads such as a light pole or small water pump, a panel with a micro-inverter and co-located battery might be more cost effective. A good example is the call boxes on the side of the freeway.
- In areas where shading might be an issue a micro-inverter architecture might be the way to go. When one panel in a string gets shaded it will bring down the output of the whole string. When one panel in a micro-inverter architecture gets shaded only the output of the one panel goes down.
- Inverters require concrete pads with grounding and/or canopies.

Batteries

- Store excess energy to be used at night or when there is no other energy input, for peak shaving, etc.
- Centrally located batteries stored in a climate controlled space, if you have extreme climate, is the way to go.
- If you can lay out the strings uniformly and have no shading issues then most likely a centrally located string inverter with battery bank and charger is the most cost effective.

- There is still however the micro-inverter/string-inverter issue. If you have shading concerns or if the roof you're putting them on makes you "piece-meal" the layout then micro inverters and local batteries might be more cost effective.
- Batteries are expensive. Thus emergency back-up times for a battery-powered Uninterruptible Power Supply (UPS) are not going to carry you for a long period of time – perhaps 1 hour or less.
- How batteries are exercised will greatly affect their life. If they frequently get fully drained and then powered up again, their life will be reduced. This process will be affected by how the batteries are used with the PV array, for peak shaving, to fill in for cloudy periods, etc.
- The contract should state the battery system capacity in kW-hours, as well as the instantaneous power capability in kW.
- Lead-acid batteries offer the best balance of capacity per dollar, and it is a common battery used in stand-alone power systems.
- Batteries for energy storage are normally of the “deep-cycle” type. They have larger and thicker plates and are ideal for renewable energy systems.

Monitoring System

- Monitoring systems monitor the PV array, report system data, detect faults and assist in troubleshooting, ensure safety, and control the PV array for optimal performance such as maximum power tracking (MPT). Recommend having an Email notification for determining faults and off line events of the PV system since an inoperable system could go unnoticed for a long period of time.
- Can be combined with inverter.

Switching and Controls

- Intertie with EMCS via software and LAN. Adjust HVAC and Lighting loads at controlled buildings in conjunction with loss of utility power and/or PV system fluctuations.
- A/C Disconnect with appropriate controls. Disconnect PV system from the utility grid; or island the base electrical system to form a micro-grid.
- Load Management. Shed load at non-essential buildings during utility outages via software and LAN. Utilize battery storage or generator plant when needed to make up load or to shave peak utility load.
- Provide transfer switches, shunt trip breakers, individual building control HVAC and Lighting systems, and other load management schemes at remote buildings to manage micro-grid loads.

Vendors

- Eaton – Inverters, Combiner Boxes, DC Disconnects
- SMA – Inverters and Monitoring Systems
- Xantrex – Inverters, Battery Chargers
- Fronius – Inverters, Battery Chargers
- Outback Power– Inverters, Battery Chargers
- Advanced Energy – Thin Films, Inverters
- SatCon - Inverters
- Solectria – Inverters, Battery Chargers, Combiners
- Schneider Electric - Inverters
- Sharp Electronics – Solar Panels
- 1st Solar – Thin Films
- Honeywell – Micro-grid technology

[Specifications]

Photovoltaic System specifications (UFGS) are currently under development by the Navy.

[Case Study]

Fort Hunter Liggett, California – 4MW Solar PV System and Battery Storage

The Sacramento District is nearing completion on the second of four 1MW photovoltaic projects at Fort Hunter Liggett, Calif. Phase 1 was completed in April 2012 and generates one megawatt of power, enough energy to power 250 to 300 homes. The project's power production and

weather data can be seen here: http://live.deckmonitoring.com/?id=fort_hunter_liggett (may take awhile to load). This is a good example of Measurement and Verification that is required on ECIP projects. The power data is reported directly from the inverter, which is an Advance Energy Soloron inverter. The weather data is reported from an irradiance meter, an anemometer and a thermometer – metering devices which were all part of the contract. Phase 2, scheduled for completion in May 2013, will generate an additional one megawatt of power. Along with the energy production, the panel arrays form a canopy that will shade the majority of the post's vehicles. A separate battery storage project was recently awarded to store PV generated power for use at night, during utility outage, for intermittent cloud cover and for peak shaving. The battery system capacity is 1 MW-Hour, with an instantaneous power capability of 1 MW. The Fort hopes to connect all the PV systems and the Battery storage into a Micro-Grid that will be able to provide power to key buildings on post during power outages. Fort Hunter Liggett is one of six pilot installations selected by the U.S. Army to be net zero energy, meaning the installation will create as much energy as it uses.