US Army Corps of Engineers ®
ENGINEERING AND SUPPORT CENTER
HUNTSVILLE, AL

TRAINING SUPPORT CENTER (TSC) SMALL

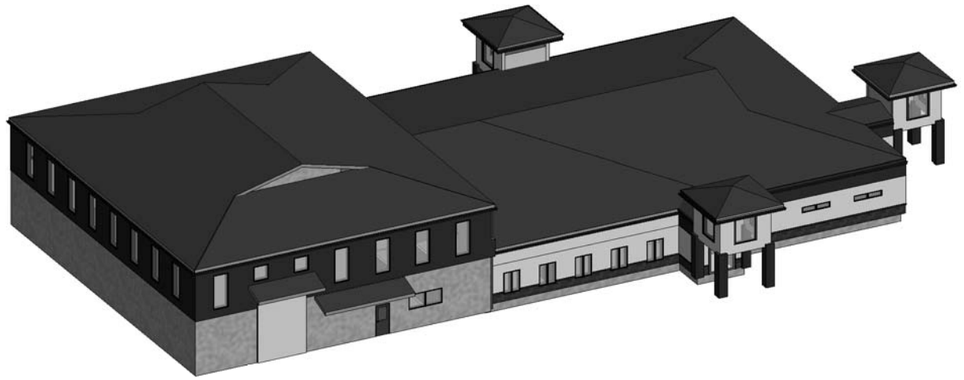

CENTER OF STANDARDIZATION

LOCATION:

CONTRACT NUMBER : N/A

SOLICITATION NUMBER : N/A

PREPARED: JUNE 2014

STATUS: 65% ENERGY CONSERVATION DESIGN PACKAGE

*ENERGY CONSERVATION MEASURES AND LEED/SUSTAINABLE DESIGN FEATURES HAVE BEEN CONSIDERED FOR THIS PROJECT.

ANTICIPATE LEED: 50 CREDIT POINTS.

U.S. ARMY CORPS OF ENGINEERS
ENGINEERING AND SUPPORT CENTER, HUNTSVILLE

DISCIPLINES	DESIGNERS	REVIEWERS	SUPERVISORS
STRUCTURAL	MOLLY RICHARDSON	JOSH UMPHREY	JEFF COULSTON
ARCHITECTURAL	MARILYN SCOTT	TBD	TODD DUVERNAY
MECHANICAL PLUMBING FIRE PROTECTION	JOHN STEVENS	SANDY WOOD	ROD BRIDGEMAN
ELECTRICAL TELECOMMUNICATIONS SECURITY	TBD	TBD	TBD

APPROVALS	SIGNATURES
BCOE BY	
REVIEWED BY (DIVISION CHIEF-MECH/ELEC)	
REVIEWED BY (DIVISION CHIEF-CIVIL/STRUC)	
RECOMMENDED BY (DIR OF ENGINEERING)	
APPROVED BY (COMMANDER)	

THIS PROJECT WAS DESIGNED BY THE U.S. ARMY ENGINEERING AND SUPPORT CENTER, HUNTSVILLE, OF THE U.S.ARMY CORPS OF ENGINEERS. THE INITIALS OR SIGNATURES AND REGISTRATIONS OF INDIVIDUALS APPEAR ON THESE DOCUMENTS WITHIN THE SCOPE OF THEIR EMPLOYMENT AS REQUIRED BY ER 1110-1-8152 AND CEHNC 1110-1-1.

INDEX OF DRAWINGS

SHEET I.D.	SHEET TITLE	SHEET NO.
01 GENERAL		
G-001	COVER SHEET	1
G-002	DRAWING INDEX	2
G-003	SYMBOLS AND ABBREVIATIONS	3
07 STRUCTURAL		
S-001	GENERAL STRUCTURAL NOTES	4
S-101	FOUNDATION PLAN - AREA A	5
S-102	FOUNDATION PLAN - AREA B	6
S-103	ROOF FRAMING PLAN	7
S-201	BUILDING ELEVATIONS	8
S-301	BUILDING SECTIONS	9
S-302	FOUNDATION SECTIONS	10
S-601	SCHEDULES	11
08 ARCHITECTURAL		
A-101	GENERAL PLAN INFORMATION	12
A-102	LIFE SAFETY PLAN	13
A-103	FLOOR PLAN	14
A-104	LARGE SCALE PLANS AND ELEVATIONS	15
A-105	ROOF PLAN	16
A-106	REFLECTED CEILING PLAN	17
A-201	EXTERIOR ELEVATIONS	18
A-202	EXTERIOR ELEVATIONS	19
A-301	BUILDING SECTIONS	20
A-302	WALL SECTIONS	21
A-501	MISCELLANEOUS DETAILS	22
A-502	MISCELLANEOUS DETAILS	23
A-503	DOOR AND WINDOW DETAILS	24
A-601	WALL, DOOR AND WINDOW SCHEDULES	25
A-602	FINISH SCHEDULE	26
11 FIRE PROTECTION		
FA101	FIRE ALARM AND MNS FLOOR PLAN - AREA A	27
FA102	FIRE ALARM AND MNS FLOOR PLAN - AREA B	28
FA602	FA/MNS SYSTEMS OPERATIONS MATRIX	29
12 PLUMBING		
P-101	POTABLE HOT AND COLD WATER - AREA A	30
P-102	SANITARY WASTE AND VENT PIPING - AREA A	31
P-103	SANITARY WASTE AND VENT PIPING - AREA B	32
P-201	HOT AND COLD WATER RISER DIAGRAM - AREA A	33
P-202	WASTE AND VENT RISER DIAGRAM - AREA A & B	34
P-501	PLUMBING DETAILS	35
P-601	PLUMBING SCHEDULES	36
14 MECHANICAL		
M-001	HVAC LEGEND AND NOTES	37
M-101	HVAC FLOORPLAN - AREA A	38
M-102	HVAC FLOORPLAN - AREA B	39
M-501	HVAC DETAILS	40
M-502	HVAC DETAILS	41
M-601	HVAC SCHEDULES	42
M-602	HVAC CONTROLS LEGEND	43
M-603	CONTROLS SCHEMATIC AND SEQUENCE	44
M-604	CONTROLS SCHEMATIC AND SEQUENCE	45
15 ELECTRICAL		
E-001	LEGEND AND NOTES	46
EL101	LIGHTING PLAN - AREA A	47
EL102	LIGHTING PLAN - AREA B	48
EL501	LIGHT FIXTURE SCHEDULE AND DETAILS	49
EP101	POWER PLAN - AREA A	50
EP102	POWER PLAN - AREA B	51
16 TELECOMMUNICATIONS		
T-001	COMMUNICATIONS LEGEND AND GENERAL NOTES	52
T-101	COMMUNICATIONS PLAN - AREA A	53
T-102	COMMUNICATIONS PLAN - AREA B	54

US Army Corps of Engineers ®
HUNTSVILLE CENTER

SYMBOL	DESCRIPTION	DATE	BY

DATE: JUNE 2014
SOLICITATION NO.: N/A
CONTRACT NO.: N/A
CATEGORY CODE:
DESIGN BY: MES
DRAWN BY: ES
CKD BY:
SBMT BY:
PLOT DATE: 6/6/2014 3:28:35 PM
PLOT SCALE:
SIZE: D 22" X 34"
FILE NAME:

U.S. ARMY CORPS OF ENGINEERS
ENGINEERING AND SUPPORT CENTER

4820 UNIVERSITY SQ.
HUNTSVILLE, AL 35816

TRAINING SUPPORT CENTER (TSC) SMALL

DRAWING INDEX

PLATE REFERENCE NUMBER
G-002

DRAWING ABBREVIATIONS

A ----------
A - LABEL CLASS A DOOR
A/C - AIR CONDITION
A/C - UNIT AIR CONDITIONING UNIT
A/E - ARCHITECT/ENGINEER
AB - ANCHOR BOLT
ACC - ACCESSIBLE
ACS - AUTOMATIC CONTROL SYSTEM
ACT - ACOUSTICAL CEILING TILE
ADA - AMERICANS WITH DISABILITIES ACT
ADMIN - ADMINISTRATION
AFC - ABOVE FINISHED COUNTER
AFF - ABOVE FINISHED FLOOR
AFG - ABOVE FINISHED GRADE
AFS - ABOVE FINISHED SLAB
AGGR - AGGREGATE
AHU - AIR HANDLING UNIT
ALT - ALTERNATE
ALUM - ALUMINUM
ANOD - ANODIZE
APPROX - APPROXIMATE
AR - AS REQUIRED
ARCH - ARCHITECT
ASC - ABOVE SUSPENDED CEILING
ASSY - ASSEMBLY
ATC - ACOUSTICAL TILE CEILING
AVG - AVERAGE

B ----------
BALC - BALCONY
BB - BASEBOARD
BD - BOARD
BDRY - BOUNDARY
BFF - BELOW FINISH FLOOR
BHMA - BUILDER'S HARDWARE MANUFACTURER'S ASSOCIATION
BLDG - BUILDING
BLKG - BLOCKING
BLTIN - BUILT-IN
BOS - BOTTOM OF STEEL
BOT - BOTTOM
BRKT - BRACKET
BSMT - BASEMENT
BTWN - BETWEEN

C ----------
C CONC - CAST CONCRETE
CAB - CABINET
CAV - CAVITY
CD - CONSTRUCTION DOCUMENTS
CDW - CHILLED DRINKING WATER
CEM PLAS - CEMENT PLASTER
CER - CERAMIC
CF - CONTRACTOR FURNISHED
CF/CI - CONTRACTOR FURNISHED/CONTRACTOR INSTALLED
CFE - CONTRACTOR FURNISHED EQUIPMENT
CFLG - COUNTERFLASHING
CFM - CUBIC FEET PER MINUTE
CFMF - COLD-FORMED METAL FRAMING
CFS - CUBIC FEET PER SECOND
CG - CORNER GUARD
CI - CAST IRON
CIP - CAST-IN-PLACE
CJ - CONTROL JOINT
CL - CENTER LINE
CLG - CEILING
CLG DIFF - CEILING DIFFUSER
CLG HT - CEILING HEIGHT
CLL - COLUMN LINE
CLO - CLOSET
CLR - COLOR
CLRM - CLASSROOM
CMU - CONCRETE MASONRY UNIT
CNDS - CONDENSATE
CDR - CARD READER
CO - CLEANOUT
COL - COLUMN
COMM - COMMUNICATION
CONC - CONCRETE
CONC FLR - CONCRETE FLOOR
CONF - CONFERENCE
CONT - CONTINUE
COORD - COORDINATE
CORR - CORRIDOR
CP - CONCRETE PIPE
CPT - CARPET
CSWK - CASEWORK
CT - CERAMIC TILE
CTB - CERAMIC TILE BASE
CTF - CERAMIC TILE FLOOR
CTR - CENTER
CU FT - CUBIC FEET
CW - CASEMENT WINDOW

D ----------
D - DEPTH
DBL - DOUBLE
DEMO - DEMOLITION
DEPT - DEPARTMENT
DET - DETAIL
DIA - DIAMETER
DIM - DIMENSION
DIR - DIRECTION
DIST - DISTANCE
DOC - DOCUMENT
DR - DOOR
DS - DOWNSPOUT

E----------
E LABEL - CLASS E DOOR
EA - EACH
EF - EACH FACE
EIFS - EXTERIOR INSULATION AND FINISH SYSTEM
EJ - EXPANSION JOINT
ES - EACH SIDE
EL - ELEVATION
ELEV - ELEVATOR
ENTR - ENTRANCE
EPS - EXPANDED POLYSTYRENE BOARD (INSULATION)
EQ - EQUAL
E.W. - EACH WAY
EWC - ELECTRIC WATER COOLER
EXP - EXPOSED
EXT - EXTERIOR
EXT - EXTINGUISHER
EXT - GR EXTERIOR GRADE

F----------
FAS BD - FASCIA BOARD
FC BRK - FACE BRICK
FCO - FLOOR CLEANOUT
FD - FLOOR DRAIN
FDTN - FOUNDATION
FE - FIRE EXTINGUISHER
FEC - FIRE EXTINGUISHER CABINET
FF - FINISH FACE
FF EL - FINISH FLOOR ELEVATION
FF INSUL - FOIL BACKED INSULATION
FGL - FIBERGLASS
FH - FIRE HOSE
FHP - FULL HEIGHT PARTITION
FIN - FINISH
FIN BS - FINISH BOTH SIDES
FIN FLR - FINISH FLOOR
FIN GR - FINISH GRADE
FIXT - FIXTURE
FLDG - FOLDING
FLEX - FLEXIBLE
FLG - FLOORING
FLMT - FLUSH MOUNT
FLR - FLOOR
FOC - FACE OF CONCRETE
FOM - FACE OF MASONRY
FR - FIRE RESISTANT
FRG - FIBER REINFORCED GYPSUM
FRMG - FRAMING
FRTW - FIRE RETARDANT TREATED WOOD
FSTNR - FASTENER
FT - FEET
FTG - FOOTING
FWC - FABRIC WALLCOVERING

G ----------
G - NATURAL GAS
GALV - GALVANIZED
GB - GRAB BAR
GLZ - GLAZING
GR FL - GROUND FLOOR
GUT - GUTTER
GYP BD - GYPSUM BOARD
GYP PLAS - GYPSUM PLASTER

H ----------
HB - HOSE BIBB
HM - HOLLOW METAL
HMD - HOLLOW METAL DOOR
HORIZ - HORIZONTAL
HT - HEIGHT

I ----------
IBC - INTERNATIONAL BUILDING CODE
INSUL - INSULATION
INT - INTERIOR

J ----------
JAN - JANITOR

K ----------
KIT - KITCHEN
KPL - KICKPLATE

L ----------
LAM - LAMINATE
LAV - LAVATORY
LBR - LUMBER
LF - LINEAR FEET (FOOT)
LIN - LINEAR
LKR - LOCKER
LOC - LOCATION
LT - LIGHT
LVDR - LOUVER DOOR
LVR - LOUVER

M ----------
MACH RM - MACHINE ROOM
MATL - MATERIAL
MAX - MAXIMUM
MC - MOISTURE CONTENT
MD - METAL DECK
MECH - MECHANICAL
MECH RM - MECHANICAL ROOM
MEMB - MEMBRANE
MF - MILL FINISH
MFR - MANUFACTURER
MID - MIDDLE
MIN - MINIMUM, MINUTE
MIRR - MIRROR
MISC - MISCELLANEOUS
MLDG - MOLDING (MOULDING)
MO - MASONRY OPENING
MOD - MODIFY
MB - MOISTURE BARRIER
MTG - MOUNTING
MTL - METAL
MVBL - MOVABLE
MWP - MEMBRANE WATERPROOFING

N ----------
N - NORTH
NA - NOT APPLICABLE
NFPA - NATIONAL FIRE PROTECTION ASSOCIATION
NIC - NOT IN CONTRACT
NO - NUMBER
NOM - NOMINAL
NP - NO PAINT
NRC - NOISE REDUCTION COEFFICIENT
NTS - NOT TO SCALE

O ----------
OA - OVERALL
OC - ON CENTER
OD - OUTSIDE DIAMETER
OFD - OVERFLOW DRAIN
OFF - OFFICE
OGL - OBSCURE GLASS
OPH - OPPOSITE HAND
OPNG - OPENING
OPP - OPPOSITE
OPQ - OPAQUE
OPR - OPERABLE
ORIG - ORIGINAL

P----------
PAT - PATTERN
PB - PULL BOX
PBD - PARTICLEBOARD
PCC - PRECAST CONCRETE
PCF - POUNDS PER CUBIC FOOT
PCT - PERCENT
PERF - PERFORATED
PERIM - PERIMETER
PH - PHASE
PIL - PILASTER
PL - PROPERTY LINE
PLAM - PLASTIC LAMINATE
PLAS - PLASTER
PLBG - PLUMBING
PLG - PILING
PLYWD - PLYWOOD
PNL - PANEL
PP - PL PUSH/PULL PLATE
PR - PAIR
PRCST - PRECAST
PRKG - PARKING
PS CONC - PRESTRESSED CONCRETE
PSF - POUNDS PER SQUARE FOOT
PSI - POUNDS PER SQUARE INCH
PT - PRESSURE TREATED
PTD - PAPER TOWEL DISPENSER
PTDR - PAPER TOWEL DISPENSER AND RECEPTACLE
PTN - PARTITION
PWR - POWER

Q ----------
QT - QUARRY TILE
QTY - QUANTITY

R----------
R - RADIUS
RB - RESILIENT BASE
RBM - REINFORCED BRICK MASONRY
RBR - RUBBER
RC - REINFORCED CONCRETE
RCP - REFLECTED CEILING PLAN
RD - ROOF DRAIN
RDG INS - RIGID INSULATION, SOLID
REC - RECESSED
REC RM - RECREATION ROOM
REF - REFERENCE
REM - REMOVABLE
REP - REPAIR
REPL - REPLACE
REQ - REQUIRE
REQ'D - REQUIRED
RESIL - RESILIENT
REST - RESTROOM
RF - RESILIENT FLOORING
RFG - ROOFING
RH - ROOF HATCH
RHR - RIGHT HAND REVERSE
RL - ROOF LEADER
RLG - RAILING
RM - ROOM
RO - ROUGH OPENING
RSD - ROLLING STEEL DOOR
RV - ROOF VENT
RVL - REVEAL

S----------
SB - SPLASH BLOCK
SCHED - SCHEDULE
SD - SMOKE DETECTOR
SF - SQUARE FOOT (FEET)
SFTWD - SOFTWOOD
SGL - SINGLE
SHT MTL FLASH - SHEET METAL (FLASHING)
SHTHG - SHEATHING
SHV - SHELVING
SIM - SIMILAR
SKLT - SKYLIGHT
SLNT - SEALANT
SMK - SMOKE
SMLS - SEAMLESS
SP EL - SPOT ELEVATION
SPEC - SPECIFICATION
SQ - SQUARE
SQ IN - SQUARE INCH
SQ YD - SQUARE YARD
SST - STAINLESS STEEL
ST - STAIRS
STD - STANDARD
STL JST - STEEL JOIST
STL RF DK - STEEL ROOF DECK
STOR - STORAGE
SUB FL - SUBFLOOR
SV - SHEET VINYL
SW - SIDEWALK

T----------
T - TREAD
TEL - TELEPHONE
TEMP - TEMPORARY
TER - TERRAZZO
TFF - TOP OF FINISH FLOOR
THK - THICKNESS
TK BD - TACKBOARD
TMPD GL - TEMPERED GLASS
TN - TRUE NORTH
TOF - TOP OF FOOTING
TOM - TOP OF MASONRY
TOPO - TOPOGRAPHY
TOS - TOP OF SLAB
TRTD - TREATED
TV - TELEVISION
TYP - TYPICAL

U----------
U-VALUE - THERMAL TRANSMITTANCE

INDEX OF DRAWINGS

NUMBERING SYSTEM:

DISCIPLINE:
C - CIVIL
L - LANDSCAPE
A - ARCHITECTURE
M - MECHANICAL
E - ELECTRICAL
P - PLUMBING
S - STRUCTURAI
G - GENERAL

SHEET NUMBER WITHIN DISCIPLINE

A-101

LEGEND

MATERIALS

CONCRETE/ PRECAST CONCRETE
SOIL
SAND, EIFS FINISH COAT, OR CEMENT PLASTER
BRICK
CMU
STONE
FIBERGLASS BATT INSULATION
FIBERGLASS SEMI RIGID INSULATION
MINERAL WOOL SEMI RIGID INSULATION
EXPANDED POLYSTYRENE RIGID INSULATION
EXTRUDED POLYSTYRENE RIGID INSULATION
POLYISOCYANURATE RIGID INSULATION
GYPSUM BOARD
EXTERIOR GYPSUM SHEATHING
EXTERIOR CEMENT BOARD
COATED GLASS MAT WATER RESISTANT GYP BD
PLYWOOD
COVER BOARD

ANNOTATION CALLOUTS/DRAWING SYMBOLS

1 A101 — INTERIOR ELEVATION
PLATE NUMBER WHERE SECTION/DETAIL IS DRAWN
1 A101 — EXTERIOR ELEVATION
PLATE NUMBER WHERE SECTION/DETAIL IS DRAWN
1 A101 — SECTION
PLATE NUMBER WHERE SECTION/DETAIL IS DRAWN
1 A101 — PLAN, BLOW-UP DETAIL
PLATE NUMBER WHERE SECTION/DETAIL IS DRAWN
SPOT ELEVATION
Name Elevation — FLOOR LEVEL & NAME
A — SHEET KEYNOTE

ROOM NAME/NUMBER
01 — WINDOW TYPE
4 — WALL TYPE
EQUIPMENT NUMBER
101 — DOOR NUMBER
N — NORTH ARROW
JOB NORTH

CEILING SYMBOLS

2' x 2' ACT CEILING
4' x 4' ACT CEILING
1' x 1' ACT CEILING
GYP. BD. CEILING
2 X 4 LIGHT FIXTURE
2 x 2 LIGHT FIXTURE
SUSP. FLUORESCENT LIGHT
RETURN AIR GRILLE
SUPPLY AIR GRILLE
EXHAUST AIR GRILLE
EXIT LIGHT

ENERGY CONSERVATION NOTES

1. BUILDING THERMAL ENVELOPE SHALL MEET MINIMUM REQUIREMENT BASED ON THE CLIMATE ZONE
2. RECOMMEND MINUMUM THERMAL RESISTANCE (R-VALUE) FOR EXTERIOR WALLS IN TSC ZONE 1, 2, USE R-18 OR BETTER
3. A CONTINUOUS AIR BARRIER SHALL BE PROVIDED THROUGHOUT THE BUILDING THERMAL ENVELOPE
4. THE AIR BARRIER SHALL BE PERMITTED TO BE LOCATED ON THE INSIDE OR OUTSIDE OF THE BUILDING ENVELOPE
5. AIR BARRIERS ARE NOT REQUIRED IN BUILDINGS LOCATED IN CLIMATE ZONES 1, 2, AND 3
6. THE AIR BARRIER SHALL BE CONTINUOUS FOR ASSEMBLIES THAT ARE THE THERMAL ENVELOPE OF THE BUILDING AND ACCROSS THE JOINTS AND ASSEMBLIES
7. AIR BARRIER JOINTS AND SEAMS SHALL BE SEALED INCLUDING SEALING TRANSITIONS IN PLACE AND CHANGES IN MATERIALS
8. BREAKS OR JOINTS IN THE AIR BARRIER SHALL BE SEALED

LEED 2009 for New Construction and Major Renovation

Project Checklist

Project Name: Training Support Center (TSC)
Date:

Y	N	?				
3	23		**Sustainable Sites**		Possible Points:	26
Y			Prereq 1	Construction Activity Pollution Prevention		
1			Credit 1	Site Selection	1	
	5		Credit 2	Development Density and Community Connectivity	5	
	1		Credit 3	Brownfield Redevelopment	1	
	6		Credit 4.1	Alternative Transportation—Public Transportation Access	6	
	1		Credit 4.2	Alternative Transportation—Bicycle Storage and Changing Rooms	1	
	3		Credit 4.3	Alternative Transportation—Low-Emitting and Fuel-Efficient Vehicles	3	
	2		Credit 4.4	Alternative Transportation—Parking Capacity	2	
	1		Credit 5.1	Site Development—Protect or Restore Habitat	1	
	1		Credit 5.2	Site Development—Maximize Open Space	1	
	1		Credit 6.1	Stormwater Design—Quantity Control	1	
	1		Credit 6.2	Stormwater Design—Quality Control	1	
	1		Credit 7.1	Heat Island Effect—Non-roof	1	
1			Credit 7.2	Heat Island Effect—Roof	1	
1			Credit 8	Light Pollution Reduction	1	
4	6		**Water Efficiency**		Possible Points:	10
Y			Prereq 1	Water Use Reduction—20% Reduction		
4			Credit 1	Water Efficient Landscaping	2 to 4	
	2		Credit 2	Innovative Wastewater Technologies	2	
	4		Credit 3	Water Use Reduction	2 to 4	
20	15		**Energy and Atmosphere**		Possible Points:	35
Y			Prereq 1	Fundamental Commissioning of Building Energy Systems		
Y			Prereq 2	Minimum Energy Performance		
Y			Prereq 3	Fundamental Refrigerant Management		
15	4		Credit 1	Optimize Energy Performance	1 to 19	
	7		Credit 2	On-Site Renewable Energy	1 to 7	
2			Credit 3	Enhanced Commissioning	2	
	2		Credit 4	Enhanced Refrigerant Management	2	
3			Credit 5	Measurement and Verification	3	
	2		Credit 6	Green Power	2	
7	7		**Materials and Resources**		Possible Points:	14
Y			Prereq 1	Storage and Collection of Recyclables		
	3		Credit 1.1	Building Reuse—Maintain Existing Walls, Floors, and Roof	1 to 3	
	1		Credit 1.2	Building Reuse—Maintain 50% of Interior Non-Structural Elements	1	
	2		Credit 2	Construction Waste Management	1 to 2	
2			Credit 3	Materials Reuse	1 to 2	

Y	N	?			
			Materials and Resources, Continued		
2			Credit 4	Recycled Content	1 to 2
2			Credit 5	Regional Materials	1 to 2
1			Credit 6	Rapidly Renewable Materials	1
	1		Credit 7	Certified Wood	1
9	6		**Indoor Environmental Quality**	Possible Points:	15
Y			Prereq 1	Minimum Indoor Air Quality Performance	
Y			Prereq 2	Environmental Tobacco Smoke (ETS) Control	
1			Credit 1	Outdoor Air Delivery Monitoring	1
	1		Credit 2	Increased Ventilation	1
1			Credit 3.1	Construction IAQ Management Plan—During Construction	1
1			Credit 3.2	Construction IAQ Management Plan—Before Occupancy	1
1			Credit 4.1	Low-Emitting Materials—Adhesives and Sealants	1
1			Credit 4.2	Low-Emitting Materials—Paints and Coatings	1
1			Credit 4.3	Low-Emitting Materials—Flooring Systems	1
	1		Credit 4.4	Low-Emitting Materials—Composite Wood and Agrifiber Products	1
	1		Credit 5	Indoor Chemical and Pollutant Source Control	1
	1		Credit 6.1	Controllability of Systems—Lighting	1
1			Credit 6.2	Controllability of Systems—Thermal Comfort	1
1			Credit 7.1	Thermal Comfort—Design	1
1			Credit 7.2	Thermal Comfort—Verification	1
	1		Credit 8.1	Daylight and Views—Daylight	1
	1		Credit 8.2	Daylight and Views—Views	1
5	1		**Innovation and Design Process**	Possible Points:	6
1			Credit 1.1	Innovation in Design: Specific Title	1
1			Credit 1.2	Innovation in Design: Specific Title	1
1			Credit 1.3	Innovation in Design: Specific Title	1
1			Credit 1.4	Innovation in Design: Specific Title	1
	1		Credit 1.5	Innovation in Design: Specific Title	1
1			Credit 2	LEED Accredited Professional	1
2	2		**Regional Priority Credits**	Possible Points:	4
1			Credit 1.1	Regional Priority: SSc1 Site Selection	1
1			Credit 1.2	Regional Priority:Stormwater Design - Quality Contol	1
	1		Credit 1.3	Regional Priority: Certified Wood	1
	1		Credit 1.4	Regional Priority: Specific Credit	1
50	60		**Total**	Possible Points:	110

Certified 40 to 49 points Silver 50 to 59 points Gold 60 to 79 points Platinum 80 to 110

US Army Corps of Engineers ®
HUNTSVILLE CENTER

SYMBOL	DESCRIPTION	DATE	BY

DESIGN BY: ES
DRAWN BY: ES
CKD BY:
SBMT BY:
DATE: AUG 2014
SOLICITATION NO.: N/A
CONTRACT NO.: N/A
PLOT DATE: 6/3/2014 10:46:23 AM
CATEGORY CODE:
PLOT SCALE: 3/16" = 1'-0"
SIZE: D 22" X 34"
FILE NAME:

U.S. ARMY CORPS OF ENGINEERS
ENGINEERING AND SUPPORT CENTER

4820 UNIVERSITY SQ.
HUNTSVILLE, AL 35816

TRAINING SUPPORT CENTER (TSC) SMALL

SYMBOLS AND ABBREVIATIONS

PLATE REFERENCE NUMBER
G-003

SHEET 3 OF 55

DESIGN CRITERIA

A. BUILDING CODES AND SPECIFICATIONS
1. INTERNATIONAL BUILDING CODE 2006 (IBC) AS MODIFIED BY UFC 1-200-01
2. UNIFIED FACILITIES CRITERIA UFC 3-301-01 "STRUCTURAL ENGINEERING."
3. UNIFIED FACILITIES CRITERIA UFC 4-410-01 "DoD MINIMUM ANTITERRORISM STANDARDS FOR BUILDINGS."
4. AMERICAN CONCRETE INSTITUTE (ACI 318 AND 530)
5.AMERICAN INSTITUTE OF STEEL CONSTRUCTION (AISC, LATEST ED.)
6. AMERICAN WELDING SOCIETY, A.W.S.
7. STEEL DECK INSTITUTE.

B. LIVE LOADS
ROOF LOAD.....20 PSF
SNOW LOAD (pg).....5 PSF

C. WIND LOADS
BASIC WIND SPEED = 90 mph
IMPORTANCE FACTOR (I) = 1.15
EXPOSURE CATEGORY = C
INTERNAL PRESSURE COEFFICIENT (GCpi) = +/- 0.18

D. EARTHQUAKE
OCCUPANCY CATEGORY = III
Ie = 1.25
Ss = 0.08
S1 = 0.04
Sds = 0.085
Sd1 = 0.064
SEISMIC SITE CLASS = D
SEISMIC DESIGN CATEGORY = A
BASIC SEISMIC-FORCE RESISTING SYSTEM:
CLEARSTORY = ORDINARY STEEL MOMENT NOT SPECIFICALLY DETAILED FOR SEISMIC RESISTANCE
ADMIN AREA = LIGHT-FRAMED WALL SYSTEMS USING FLAT STRAP BRACING
WAREHOUSE = PRE-ENGINEERED BUILDING

GENERAL NOTES

1. STRUCTURAL DESIGN PROVIDED HEREIN IS FOR INFORMATION PURPOSES ONLY. STRUCTURAL DRAWINGS ARE NOT MANADATORY AND ARE ONLY PROVIDED TO GIVE DESIGNERS SUGGESTIONS ON HOW THE TRAINING SUPPORT CENTER COULD BE STRUCTURALLY DESIGNED.

2. STRUCTURAL DESIGNER WILL BE RESPONSIBLE FOR SELECTING APPROPRIATE STRUCTURAL SYSTEMS FOR ANY SPECIFIC SITE DESIGN.

3. FOUNDATION, WALL, AND ROOF SYSTEM STRUCTURAL DESIGN IS NOTATIONAL. FINAL STRUCTURAL DESIGN SHALL BE PERFORMED AND COORDINATED BY OTHERS.

4. FLOOR DRAIN LOCATIONS NOT SHOWN FOR CLARITY. LOCATIONS TO BE COORDINATED WITH PLUMBING. SEE ARCH DRAWINGS FOR LOCATION.

5. CONTRACTOR SHALL VERIFY ALL DIMENSTIONS AND SITE CONDIITIONS PRIOR TO CONSTRUCTION/FABRICATION. CONTRACTOR SHALL NOTIFY ARCHITECT/ENGINEER OF ANY DISCREPANCIES PRIOR TO CONSTRUCTION.

6. THE STRUCTURE HAS BEEN DESIGNED TO SUPPORT IN PLACE LOADS ONLY. THE CONTRACTOR SHALL BE RESPONSIBLE FOR LIMITING CONSTRUCTION LOADS SUCH THAT THESE LOADS DO NOT EXCEED THE DESIGN LOADS NOTED IN ABOVE REFERENCES.

7. IT IS THE CONTRACTOR'S RESPONSIBILITY TO DETERMINE CONSTRUCTION METHODS, PROCEDURE, AND SEQUENCES TO ENSURE STABILITY AND SAFETY DURING CONSTRUCTION. THE CONTRACTOR SHALL TAKE NECESSARY PRECAUTIONS TO PROTECT AND MAINTAIN THE STRUCTURAL INTEGRITY OF ALL NEW AND EXITING CONSTRUCTION AT ALL STAGES.

8. SECTIONS AND DETAILS SHOWN ON THE STRUCTURAL DRAWINGS SHALL BE CONSIDERED TYPICAL FOR SIMILAR CONDITIONS THAT DO NOT HAVE A SPECIFIC SECTION INDICATED.

9. THE CONTRACTOR SHALL COORDINATE STRUCTURAL DRAWINGS WITH THE ARCHITECTURAL, CIVIL, AND M/E/P DRAWINGS TO VERIFY SIZES AND LOCATIONS OF OPENINGS, SLEEVED, INSERTS, DEPRESSIONS, FINISHES, SLOPES, ETC. ANY DISCRPANCY SHALL BE BROUGHT TO THE ATTENTION OF THE ARCHITECT.

10. ANY DISCREPANCIES BETWEEN DRAWINGS, SPECIFICATIONS, REFERENCE STANDARDS, OR GOVERNING CODE, THE MORE STRINGENT REQUIREMENTS SHALL GOVERN. CONTRACTOR SHALL NOTIFY THE ENGINEER OF DISCREPANCIES AND OBTAIN DIRECTION PRIOR TO PROCEEDING.

11. CONTRACTOR SHALL PROVIDE TEMPORARY SHORING AND BRACING OF ALL STRUCTURAL WORK, AND SOIL EXCAVATION AS REQUIRED. SHORING AND BRACING SHALL NOT BE REMOVED UNTIL ALL FINAL CONNECTIONS HAVE BEEN COMPLETED IN ACCORDANCE WITH THE DRAWINGS, AND MATERIALS HAVE ACHIEVED DESIGN STRENGTH.

FOUNDATION

1. ASSUMED SIL BEARING CAPACITY = 2,000 psf

2. ALL FOUNDATION BEARING SURFACES SHALL BE REVIEWED BY THE GEOTECHNICAL ENGINEER PRIOR TO PLACING CONCRETE TO ENSURE THEIR COMPLIANCE WITH THE PRESSURES NOTED ABOVE

3. ALL DISTURBED EARTH UNDER FOOTINGS SHALL BE REPLACED WITH LEAN CONCRETE.

4. CONCRETE SHALL NOT BE PLACED OVER FROZEN SOIL OR FOOTING EXCAVATIONS SUBJECTED TO WATER.

5. FILL CELLS OF CONCRETE MASONRY UNIT (CMU) FOUNDATION WALLS WITH GROUT BELOW SLAB OR OUSIDE GRADE, WHICHEVER IS HIGHER

CONCRETE

1. ALL CAST-IN-PLACE CONCRETE SHALL HAVE SPECIFIED MINIMUM COMPRESSIVE STRENGTH OF 3,000 PSI AT 28 DAYS, U.O.N.

2. ALL CONCRETE WORK INCLUDING DETAILING, FABRICATION, PLACEMENT OF REINFORCING, MIXING, HANDLING, PLACING, FINISHING, AND CURING SHALL CONFORM TO THE FOLLOWING DOCUMENTS:

ACI 301 "STANDARD SPECIFICATIONS FOR STRUCTURAL CONCRETE"
ACI 315 "MANUAL OF STANDARD PRACTICE FOR DETAILING REINFORCED CONCRETE STRUCTURES"
ACI 318 "BUILDING CODE REQUIREMENTS FOR STRUCTURAL CONCRETE"

3. REINFORCING BARS SHALL BE DEFORMED TYPE CONFORMING TO ASTM A615 GRADE 60.

4. WELDED WIRE REINFORCEMENT SHALL CONFORM TO ASTM A185, MINIMUM LAP AND EMBEDMENT TO BE THE GREATER OF ONE CROSS WIRE SPACING PLUS 2" OR 6", WHICHEVER IS GREATER.

5. FABRICATE AND PROVIDE BAR SUPPORTING ACCESSORIES IN ACCORDANCE WITH ACI MANUAL OF STANDARD PRACTICE AND C.R.S.I. SPECIFICATIONS. REINFORCING SHALL NOT BE WELDED IN ANY MANNER U.O.N. IN CONSTRUCTION DOCUMENTS.

6. REINFORCING SHALL BE CONTINUOUS WITH CLASS "B" TENSION LAP SPLICES, U.O.N.

7. CONCRETE COVERAGE OF REINFORCEMENT:

CONCRETE CAST AGAINST EARTH ---------- 3"
FORMED CONCRETE EXPOSED TO EARTH OR WEATHER:
NO. 6 BAR AND LARGER ---------- 2"
NO. 5 BAR AND SMALLER ---------- 1-1/2"
CONCRETE NOT EXPOSED TO EARTH OR WEATHER:
SLABS, WALLS, JOISTS ---------- 3/4"
BEAMS AND COLUMNS ---------- 1-1/2"
SLAB ON GRADE ---------- MID-DEPTH OF SLAB

8. PROVIDE REINFORCING BARS IN CONCRETE FOOTINGS TO MATCH THE SIZE AND SPACING OF THE HORIZONTAL REINFORCING AT ALL CORNERS AND INTERSECTIONS OF STRIP FOOTINGS. PROVIDE LEG LENGTH EQUIVALENT TO CLASS "A" TENSION LAP SLIPE U.O.N.

9. PROVIDE DOWEL TO FOUNDATION WITH 90 DEGREE HOOK TO MATCH SIZE AND SPACING OF VERTICAL REINFORCING AT ALL PEDESTALS, WALLS, AND COLUMNS.

10. FOOTINGS AND SLABS SHALL HAVE NO HORIZONTAL JOINTS (POURED TO THEIR FULL DEPTHS IN ONE OPERATION). ANY STOP IN CONCRETE WORK SHALL BE BULKHEADED AND KEYED, U.O.N.

11. FLOOR FINISH SHALL BE SMOOTH. CONCRETE SHALL BE TROWELED NO LESS THAN TWO TIMES.

MASONRY

1. CONCRETE MASONRY CONSTRUCTION SHALL CONFORM TO ACI 520 "BUILDING CODE REQUIREMENTS FOR MASONRY STRUCTURES", AND ACI 530.1 SPECIFICATIONS.

2. MINIMUM COMPRESSIVE STRENGTH OF CONCRETE MASONRY (f'm) SHALL BE 1,500 PSI.

3. GROUT SHALL CONFORM TO ASTM C476 AND SHALL HAVE A MINIMUM COMPRESSIVE STRENGTH OF 3000 psi AT 28 DAYS. TESTING SHALL CONFORM TO ASTM C1019. GROUT SHALL HAVE A SLUMP OF 8-10". WATER REDUCING ADMIXTURES ARE NOT ALLOWED.

4. MASONRY CONSTRUCTION SHALL BE ERECTE IN LIFTS NOT TO EXCEED 4'-0" PRIOR TO GROUTING CELLS. PROVIDE GROUT KET BETWEEN GROUT LIFTS BY TERMINATING THE GROUT MIN 2" BELOW MORTOR JOINT.

5. MORTOR JOINT SHALL CONFORM TO ASTM C270, TYPE M OR S. MORTOR USED BELOW GRADE SHALL BE TYPE M.

6. ALL MASONRY SHALL BE LAID IN RUNNING BOND, U.O.N.

7. MINIMUM REINFORCING LAP SPLICES SHALL BE 48 BAR DIAMETERS, U.O.N.

8. REINFORCEMENT IN WALLS SHALL BE PLACED IN THE CENTER OF THE CELL, U.O.N.

9. PROVIDE SLEEVES THROUGH ALL CMU WALL PENETRATIONS. NO PENETRATIONS ALLOWED THROUGH BOND BEEMS OR LINTELS.

10. VERTICAL CONTROL JOINTS IN CMU WALL SHALL BE PROVIDED AT 25' O.C. MAX U.O.N. SEE DRAWINGS FOR LOCATIONS AND DETAILS.

11. WHEN VERTICAL REINFORCING IS SPECIFIED, PROVIDE 1 #5 VERTICAL MINIMUM EACH SIDE OF CONTROL JOINTS, OPENINGS, CORNERS, END OF WALLS AND INTERSECTIONS.

12. AT TOP OF ALL MASONRY WALLS, BEARING OR NON-BEARING, PROVIDE 8" DEEP CONCRETE FILLED BOND BEAM REINFORCED WITH 2 #5 CONTINUOUS.

13. AT CORNERS AND INTERSECTIONS OF BOND BEAMS, PROVIDE BARS WITH 90 DEGREE HOOKS (12" LONG) TO TIE WALLS TOGETHER.

14. FILL CMU CELLS SOLID BELOW ALL LINTEL AND BEAM BEARING ENDS FROM THE FOUNDATION TO THE LINTEL OR BEAM.

STRUCTURAL STEEL

1. STRUCTURAL STEEL SHAPE CONNECTION DESIGN SHALL CONFORM TO A.I.S.C.'S "SPECIFICATION FOR STRUCTURAL STEEL BUILDINGS."

2. STRUCTURAL STEEL SHALL CONFORM TO THE FOLLOWING ASTM DESIGNATIONS:

W-SHAPES.....ASTM A992, GRADE 50
STEEL CHANNELS, ANGLES, AND BARS.....ASTM A36
HSS.....ASTM A500, GRADE B

3. STRUCTURAL FASTNERS SHALL CONFORM TO THE FOLLOWING ASTM DESIGNATIONS:

ANCHOR BOLTS ---------- ASTM F1554
THREADED RODS ---------- ASTM A36

4. BOLTED CONNECTIONS SHALL CONFORM TO RCSC'S "FOR STRUCTURAL JOINTS USING ASTM A325 AND A490 BOLTS". ALL BOLTS SHALL BE 3/4" DIAMETER U.O.N.

5. WELDED CONNECTIONS SHALL CONFORM TO AWS D1.1 "STRUCTURAL WELDING CODE-STEEL." MINIMUM SIZE OF WELDS SHALL BE 3/16" UNLESS OTHERWISE NOTED AND ELECTRODES SHALL BE E70XX. WELDERS SHALL BE QUALIFIED IN ACCORDANCE WITH AWS.

LIGHT GAUGE METAL TRUSSES

1. PREFABRICATED METAL TRUSSES SHOWN ARE FOR GENERAL INFORMATION AND LAYOUT ONLY.

2. TRUSS MANUFACTURER SHALL DESIGN FOR THE FOLLOWING SUPERIMPOSED GRAVITY LOADS:
TOP CHORD DEAD LOAD.....10 psf
BOTTOM CHORD DEAD LOAD.....10 psf
TOP CHORD LIVE LOAD.....20 psf

3. ALL TRUSS TO TRUSS CONNECTIONS AND TRUSS TO STRUCTURE CONNECTIONS SHALL BE ENGINEERED BY THE TRUSS MANUFACTURER AND DETAILED ON THE TRUSS SHOP DRAWINGS.

4. LIGHT-GAGE METAL TRUSSES SHALL BE DESIGNED FOR CONCENTRATED LOADS HUNG FROM OR SUPPORTED ON TRUSSES. REFER TO MECHANICAL, ELECTRICAL, AND PLUMBING DRAWINGS AND SPECIFICATIONS FOR LOADING INFORMATION AND LOCATION.

METAL BUILDING SYSTEMS

1. WAREHOUSE STRUCTURAL SYSTEM WILLL BE A PREENGINEERED STEEL FRAME STRUCTURE.

2. THE FINAL MBS FOUNDATIONS SHALL BE DESIGNED BY A REGISTERED ENGINEER HIRED BY THE CONTRACTOR. THE DESIGN SHALL BE BASED ON THE GEOTECHNICAL REPORT AND THE FINAL COLUMN REACTIONS REPORTED BY THE MBS MANUFACTURER. THE DESIGN SHALL BE SIGNED AND SEALED BY A PROFESSIONAL ENGINEER AND SUBMITTED TO THE CONTRACTING OFFICER FOR APPROVAL.

3. MAXIMUM LATERAL DRIFT OF THE STEEL FRAMES AT THE EAVE SHALL NOT EXCEED h/200 OR 2-INCHES. "h" REPRESENTS THE FRAME HEIGHT FROM THE TOP OF THE BASE PLATE TO THE EAVE OF THE FRAME.

4. ALL BRACING USED TO TRANSFER OR RESIST LOADS SHALL BE EITHER HOT-ROLLED STEEL SECTIONS OR RODS. CABLE BRACING IS NOT ALLOWED EXCEPT FOR ERECTION PURPOSES.

5. CONTRACTOR SHALL COORDINATE THE COLUMN ANCHOR ROD LAYOUT WITH THE METAL BUILDING MANUFACTURER. AT LEAST (4) ANCHOR RODS ARE REQUIRED FOR COLUMN BASE PLATES (U.N.O.). ANCHOR RODS SHALL NOT BE LESS THAN 3/4" NOMINAL SIZE. ANCHOR RODS SHALL BE DESIGNED BY THE METAL BUILDING SUPPLIER.

6. CONTRACTOR IS RESPONSIBLE FOR THE DESIGN AND COORDNATION OF ALL LOAD SUPPORT SYSTEMS. THE CONTRACTOR SHALL ACCOUNT FOR ALL LOADS IMPOSED ON ALL SUPPORT SYSTEM MEMBERS AND THEIR CONNECTION. INCLUDING BUT NOT LIMITED TO ALL COLLATERAL AND CONCENTRATED LOADS.

7. REDUNDANCY SHALL BE PROVIDED TO THE VERTICAL AND HORZONTAL BRACING SYSTEMS EITHER BY USING MULTIPLE BAYS OF THE TENSION ONLY X-BRACING MEMBERS OR BY USING BRACING MEMBERS THAT ARE CAPABLE OF BOTH TENSION AND COMPRESSION IF BRACING IS PLACED IN A SINGLE BAY.

8. THE STANDING SEAM ROOFING SHALL NOT BE PERMITTED TO ACT AS A DIAPHRAGM TO TRANSFER THE LATERAL LOADS.

METAL DECK

1. METAL DECK SHALL BE IN ACCORDANCE WITH THE STEEL DECK INSTITUTE AND AISI'S"SPECIFICATIONS FOR THE DESIGN OF COLD-FORMED STEEL STRUCTURAL MEMBERS."

2. ALL FIELD WELDING OF DECK SHALL CONFORM WITH ANSI/AWS D1.3 "STRUCTURAL WELDING CODE- SHEET STEEL."

3. METAL DECK SHALL BE CONNECTED TO SUPPORTING STRUCTURE WITH #12 TEK SCREWS 6" O.C. SICLAP FASTENERS SHALL BE #10 TEK SCREWS. PROVIDE 4 SIDE LAP FASTENERS PER SPAN.

4. LIGHT GAGE FRAMING, SUSPENDED CEILING, LIGHT FIXTURES, AND DUCTS OR OTHER UTLITITES SHALL NOT BE SUPPORTED BY THE STEEL DECK.

5. DECK ENDS MAY BE EITHER BUTTED OR LAPPED OVER SUPPORTS. PROVIDE A MINIMUM OF (1-1/2") BEARING AT ALL SUPPORTING STEEL, U.O.N.

6. STEEL DECK SHALL BE CONTINUED OVER THREE OR MORE SPANS.

7. STEEL DECK SHALL BE GALVANIZED FINISHED IN A G-60 COATING CONFORMING TO ASTM A65GRADE 33, MIN.

8. WELDED WASHERS SHALL BE USED WITH STEEL DECK THINNER THAN 22 GAGE.

ABREVIATIONS

AB ANCHORBOLT
ACI AMERICAN CONCRETE INSTITUTE
AISC AMERICAN INSTITUTE OF STEEL CONSTRUCTION
ARCH ARCHITECTURAL
ASTM AMERICAN SOCIETY FOR TESTING AND MATERIALS
CJ CONTROL JOINT
CLR CLEAR
CMU CONCRETE MASONRY UNIT
COL COLUMN
CONC CONCRETE
DIA DIAMETER
EA EACH
E.W. EACH WAY
HORIZ HORIZONTAL
HSS HOLLOW STRUCTURAL SECTION
IBC INTERNATIONAL BUILDING CODE
IAW IN ACCORDANCE WITH
MIN MINIMUM
NEC NECESSARY
NOM NOMINAL
NTS NOT TO SCALE
O.C. ON CENTER
OPP OPPOSITE
OSB ORIENTED STRAND BOARD
PEMB PRE-ENGINEERED METAL BUILDING
PREFAB PREFABRICATED
PSF POUNDS PER SQUARE FOOT
REINF REINFORCEMENT
REQ'D REQUIRED
SIM SIMILAR
SQ SQUARE
STD STANDARD
TYP TYPICAL
U.O.N. UNLESS OTHERWISE NOTED
VCT VINYL COMPOSITE TYLE
W/ WITH

US Army Corps of Engineers ®
HUNTSVILLE CENTER

SYMBOL	DESCRIPTION	DATE	BY

DESIGN BY: MEM
DRAWN BY: ES
CKD BY:
DATE: MAR 2013
SOLICITATION NO.: N/A
SBMT BY:
PLOT DATE: 6/2/2014 9:21:13 AM
CONTRACT NO.: N/A
PLOT SCALE:
CATEGORY CODE:
SIZE: D 22" X 34"
FILE NAME:

U.S. ARMY CORP'S OF ENGINEERS
ENGINEERING AND SUPPORT CENTER
4820 UNIVERSITY SQ
HUNTSVILLE AL 35816

TRAINING SUPPORT CENTER (TSC)
SMALL

GENERAL STRUCTURAL NOTES

PLATE REFERENCE NUMBER
S-001

SHEET 4 OF 43

NOTES:

1. SEE SHEETS-001 FOR GENERAL STRUCTURAL NOTES.
2. ALL EXTERIOR FOOTINGS T.O.C. ELEVATIONS ARE 2'-0" BELOW FINISHED FLOOR. INTERIOR SPREAD FOOTINGS T.O.C. ELEVATIONS ARE 0'-8" BELOW FINISHED FLOOR.
3. FOR TYPICAL CONTROL JOINT DETAIL 7/S-302.

FOOTING SCHEDULE					
MARK	COUNT	SIZE	THICKNESS	VOLUME	REINF
F4.5	2	4'-6" x 4'-6"	1'-0"	41 CF	5 - #5 E.W. E.F
F6.0	12	6'-0" x 6'-0"	1'-0"	432 CF	5 - #5 E.W. E.F
	14			473 CF	

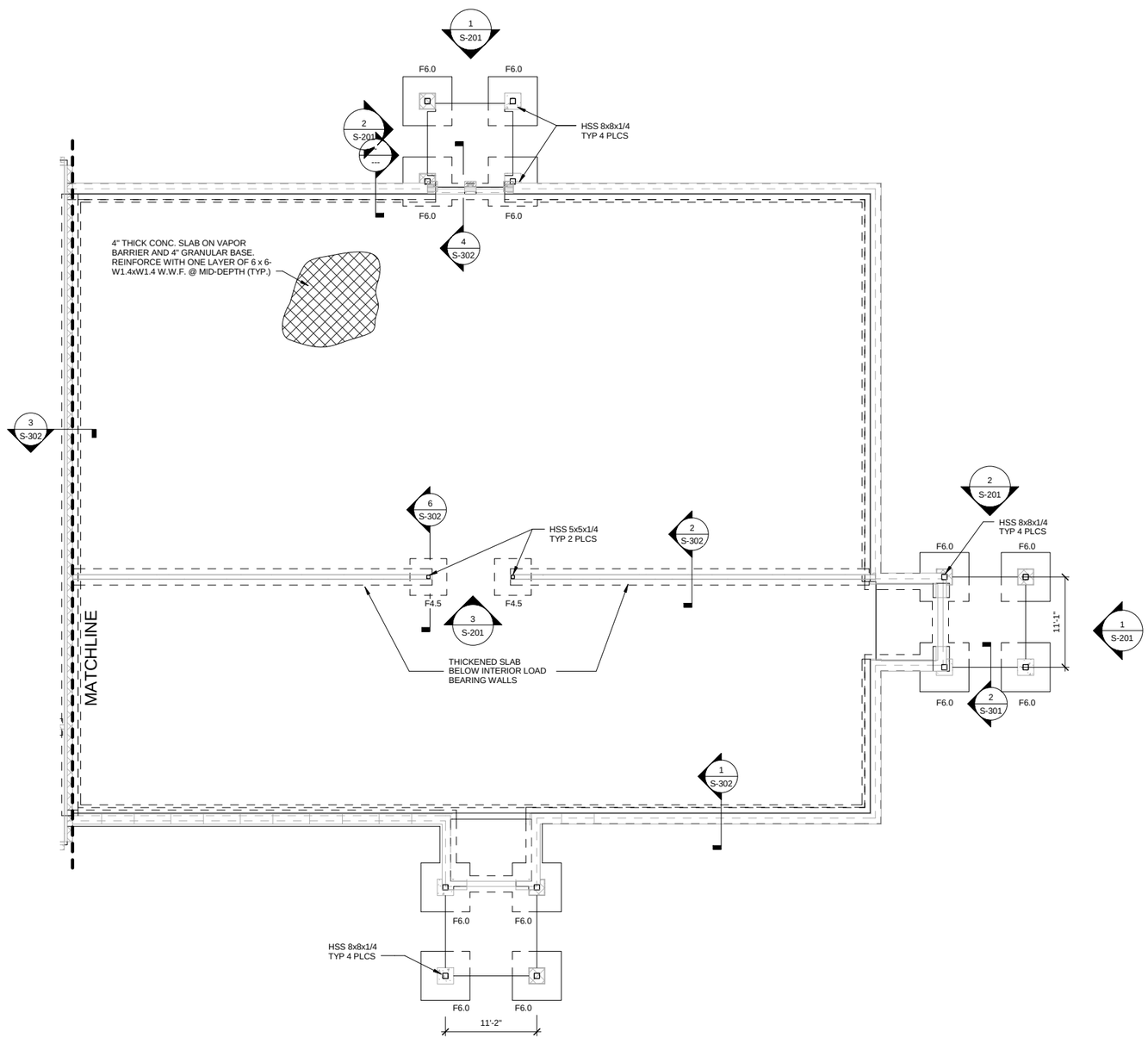

FOUNDATION/SLAB PLAN - AREA A

SCALE: 1/8" = 1'-0"

SCALE: 1/8"=1'-0"

PLAN NORTH

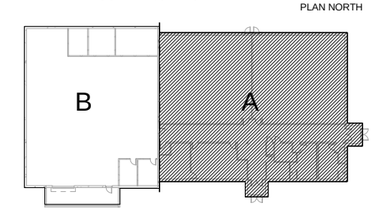

US Army Corps of Engineers ®
HUNTSVILLE CENTER

SYMBOL	DESCRIPTION	DATE	BY

DESIGN BY: MER
DRAWN BY: MER
SBMT BY:
CKD BY: JHU
PLOT DATE: 02/2014 9:21:19 AM
PLOT SCALE: As indicated
SIZE: 22" X 34"
FILE NAME:
DATE: MAR 2013
SOLICITATION NO.: N/A
CONTRACT NO.: N/A
CATEGORY CODE:

U.S. ARMY CORPS OF ENGINEERS
ENGINEERING AND SUPPORT CENTER

4820 UNIVERSITY SQ.
HUNTSVILLE, AL 35816

TRAINING SUPPORT CENTER (TSC) SMALL

FOUNDATION PLAN - AREA A

PLATE REFERENCE NUMBER
S-101

SHEET 5 OF 43

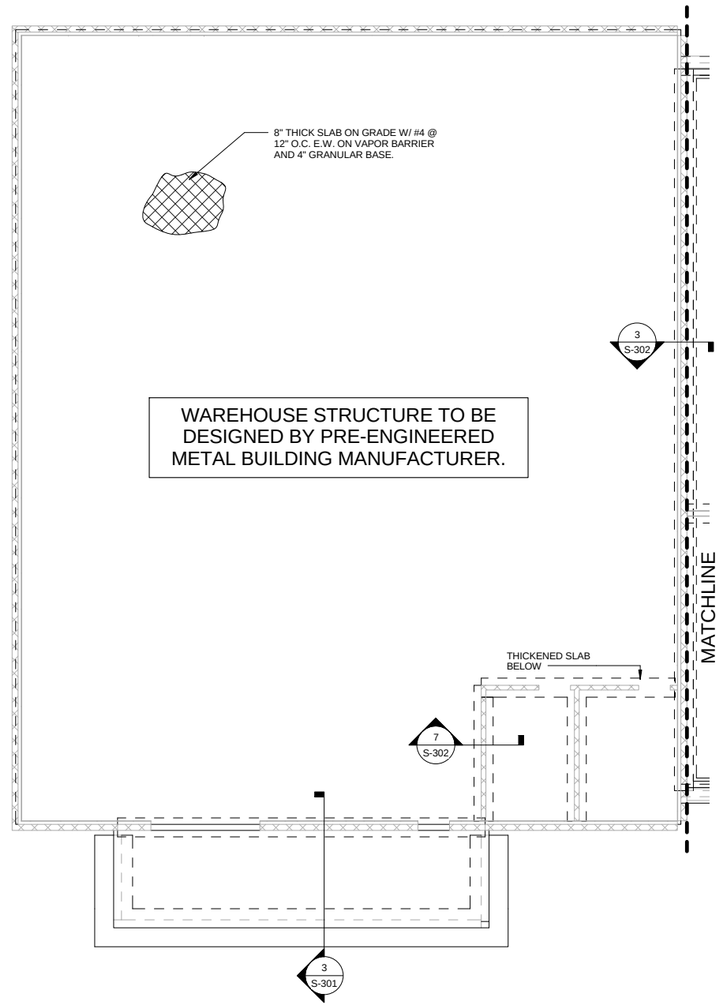

FOUNDATION/SLAB PLAN - AREA B

SCALE: 1/8" = 1'-0"

8 6 4 2 0 8 16

SCALE: 1/8"=1'-0"

N

PLAN NORTH

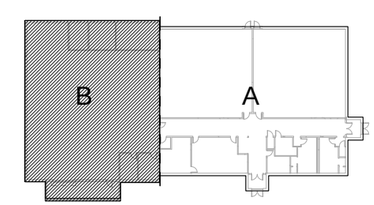

US Army Corps of Engineers ®
HUNTSVILLE CENTER

SYMBOL	DESCRIPTION	DATE	BY

DESIGN BY: MER
DRAWN BY: MER
SBMT BY:
CKD BY: JHU
PLOT DATE: 6/2/2014 9:21:29 AM
PLOT SCALE: As indicated
SIZE: 22" x 34"
DATE: MAR 2013
SOLICITATION NO.: N/A
CONTRACT NO.: N/A
CATEGORY CODE:
FILE NAME:

U.S. ARMY CORPS OF ENGINEERS
ENGINEERING AND SUPPORT CENTER

4820 UNIVERSITY SQ.
HUNTSVILLE, AL 35816

TRAINING SUPPORT CENTER (TSC) SMALL

FOUNDATION PLAN - AREA B

PLATE REFERENCE NUMBER
S-102

SHEET 6 OF 43

NOTES

1. SEE GENERAL NOTES ON S-101.
2. ROOF SYSTEM IS NOTIONAL AND FINAL DESIGN FOR THE SPECIFIC SITE LOCATIONS IS BY OTHERS. THE ROOF SYSTEM STRUCTURAL LOAD PATH SHALL BE COORDINATED WITH THE WALL AND FOUNDATION SYSTEMS.
3. BEAMS LOCATED AT INTERIOR LOAD BEARING WALLS WHERE DOORWAYS AND HALLWAYS CAUSE DISCONTINUITIES IN WALL.

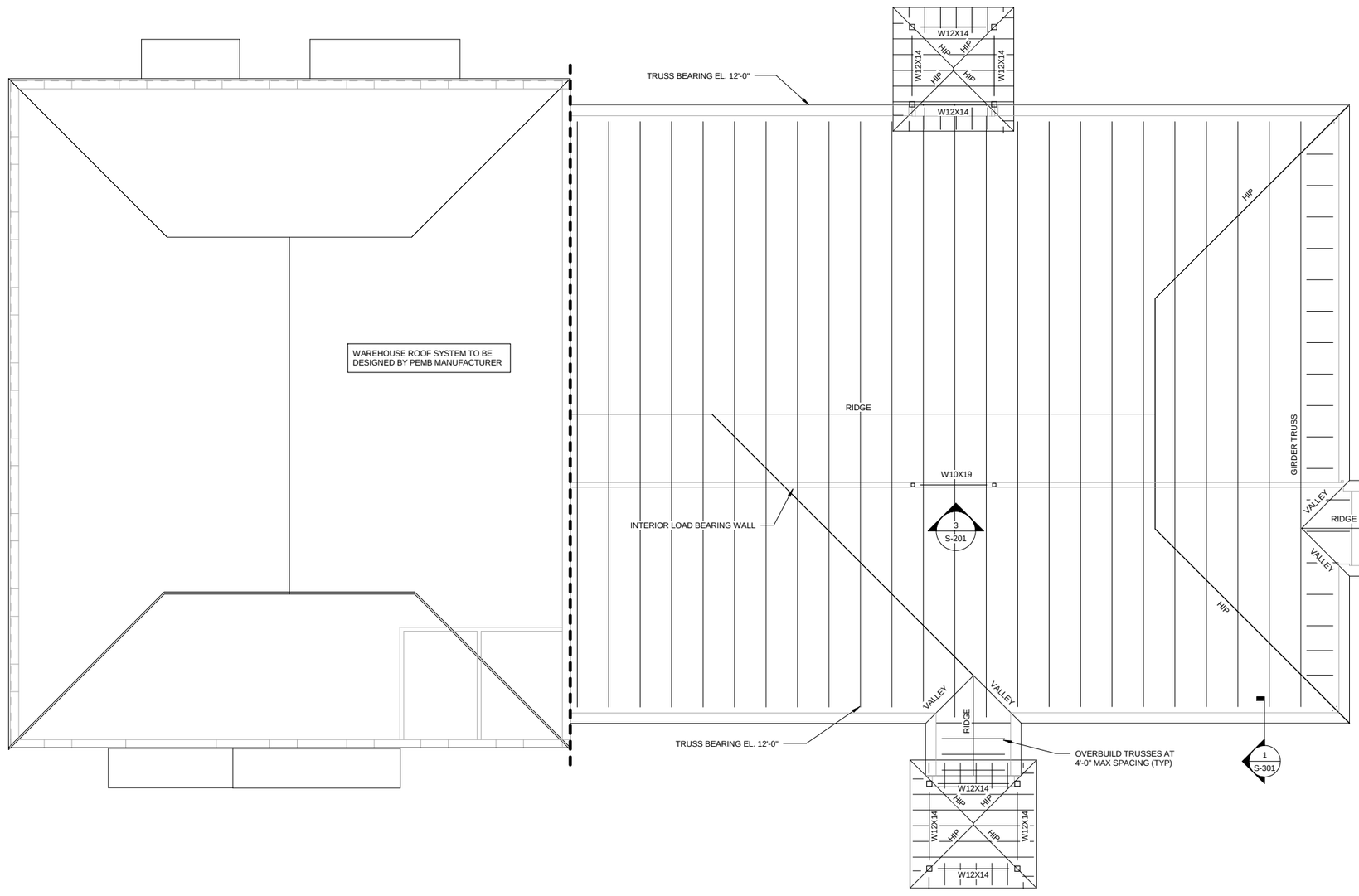

ROOF FRAMING PLAN

SCALE: 1/8" = 1'-0"

N

PLAN NORTH

8 6 4 2 0 8 16

SCALE: 1/8"=1'-0"

US Army Corps of Engineers ®
HUNTSVILLE CENTER

SYMBOL	DESCRIPTION	DATE	BY

DATE: MAR 2013
SOLICITATION NO.: N/A
CONTRACT NO.: N/A
CATEGORY CODE:
DESIGN BY: MER
DRAWN BY: MER
CKD BY: JHU
SBMT BY:
PLOT DATE: 6/2/2014 9:34:28 AM
PLOT SCALE: 1/8" = 1'-0"
SIZE: 22" X 34"
FILE NAME:

U.S. ARMY CORPS OF ENGINEERS
ENGINEERING AND SUPPORT CENTER
4820 UNIVERSITY SQ.
HUNTSVILLE AL 35816

TRAINING SUPPORT CENTER (TSC) SMALL

ROOF FRAMING PLAN

PLATE REFERENCE NUMBER
S-103
SHEET 7 OF 43

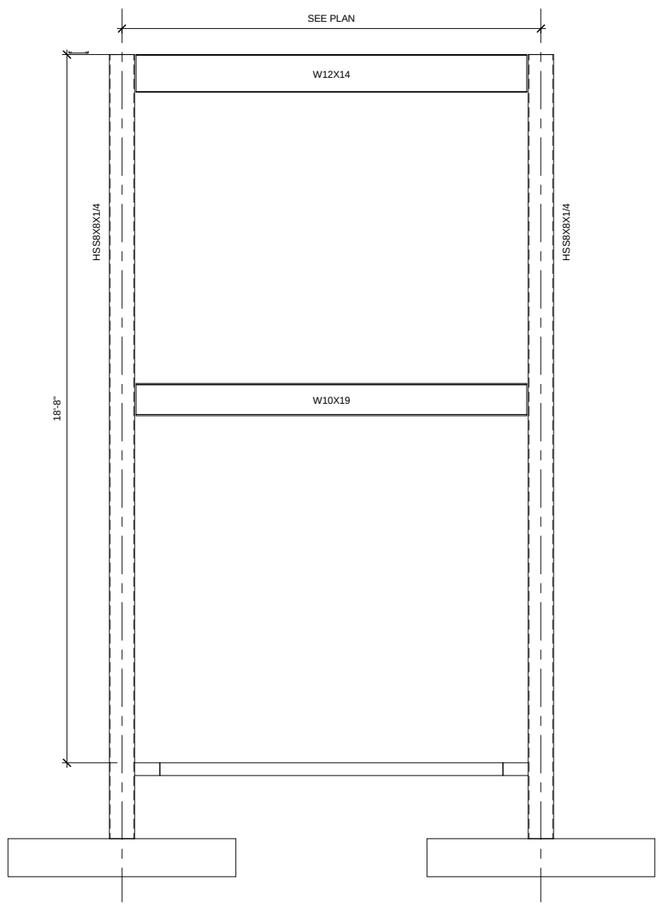

1 S-101 PORCH CANOPY ELEVATION FRONT
SCALE: 1/2" = 1'-0"

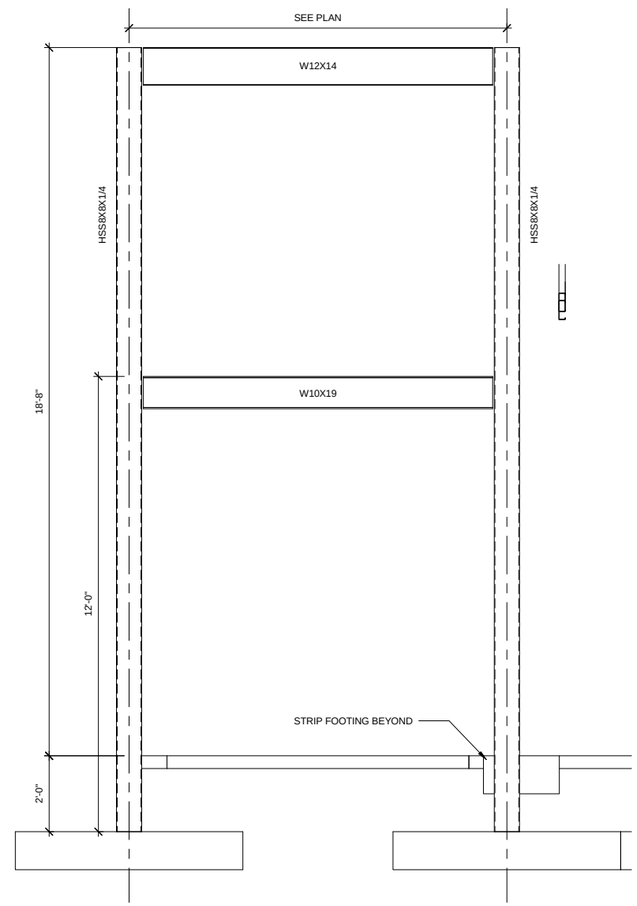

2 S-101 PORCH CANOPY ELEVATION SIDE
SCALE: 1/2" = 1'-0"

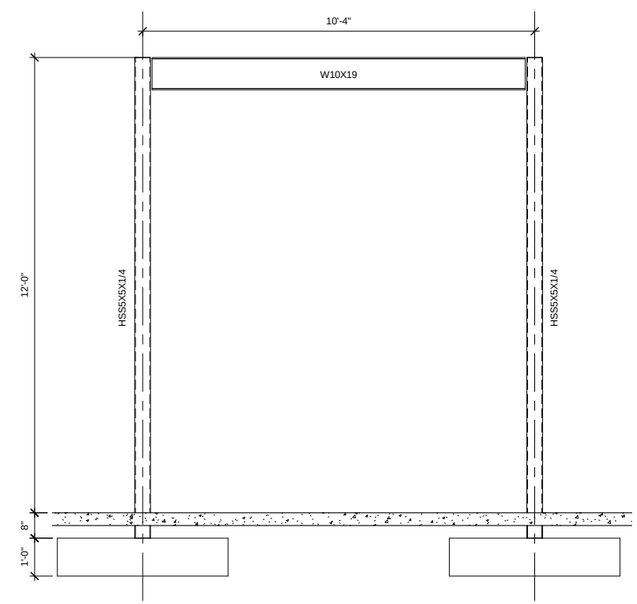

3 S-103 CORRIDOR SPAN
SCALE: 1/2" = 1'-0"

4 3 2 1 0 4 8
SCALE: 1/4"=1'-0"

US Army Corps of Engineers ®
HUNTSVILLE CENTER

SYMBOL	DESCRIPTION	DATE	BY

DESIGN BY: MER
DRAWN BY: MER
CKD BY: JHU
SBMT BY:
PLOT DATE: 6/2/2014 9:37:49 AM
PLOT SCALE: 1/2" = 1'-0"
SIZE: 30" X 42" X 34"
FILE NAME:
DATE: MAR 2013
SOLICITATION NO.: N/A
CONTRACT NO.: N/A
CATEGORY CODE:

U.S. ARMY CORPS OF ENGINEERS
ENGINEERING AND SUPPORT CENTER
4820 UNIVERSITY SQ.
HUNTSVILLE, AL 35816

TRAINING SUPPORT CENTER (TSC) SMALL

BUILDING ELEVATIONS

PLATE REFERENCE NUMBER
S-201
SHEET 8 OF 43

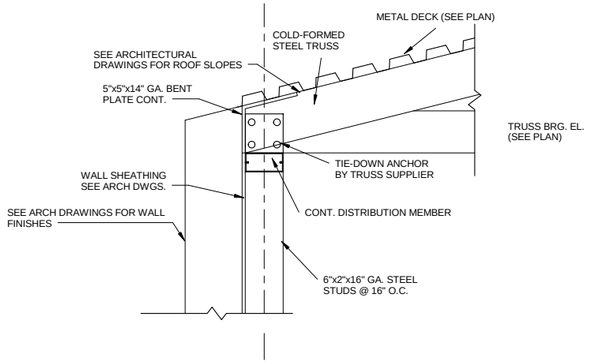

1 TRUSS BEARING SECTION

1" = 1'-0"

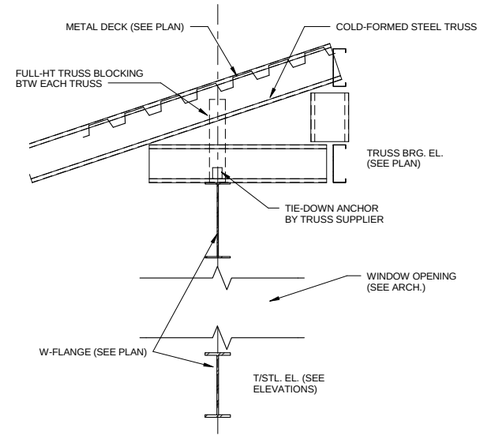

2 TRUSS BEARING

1" = 1'-0"

NOTES

1. SEE SHEET S-001 FOR GENERAL STRUCTURAL NOTES.

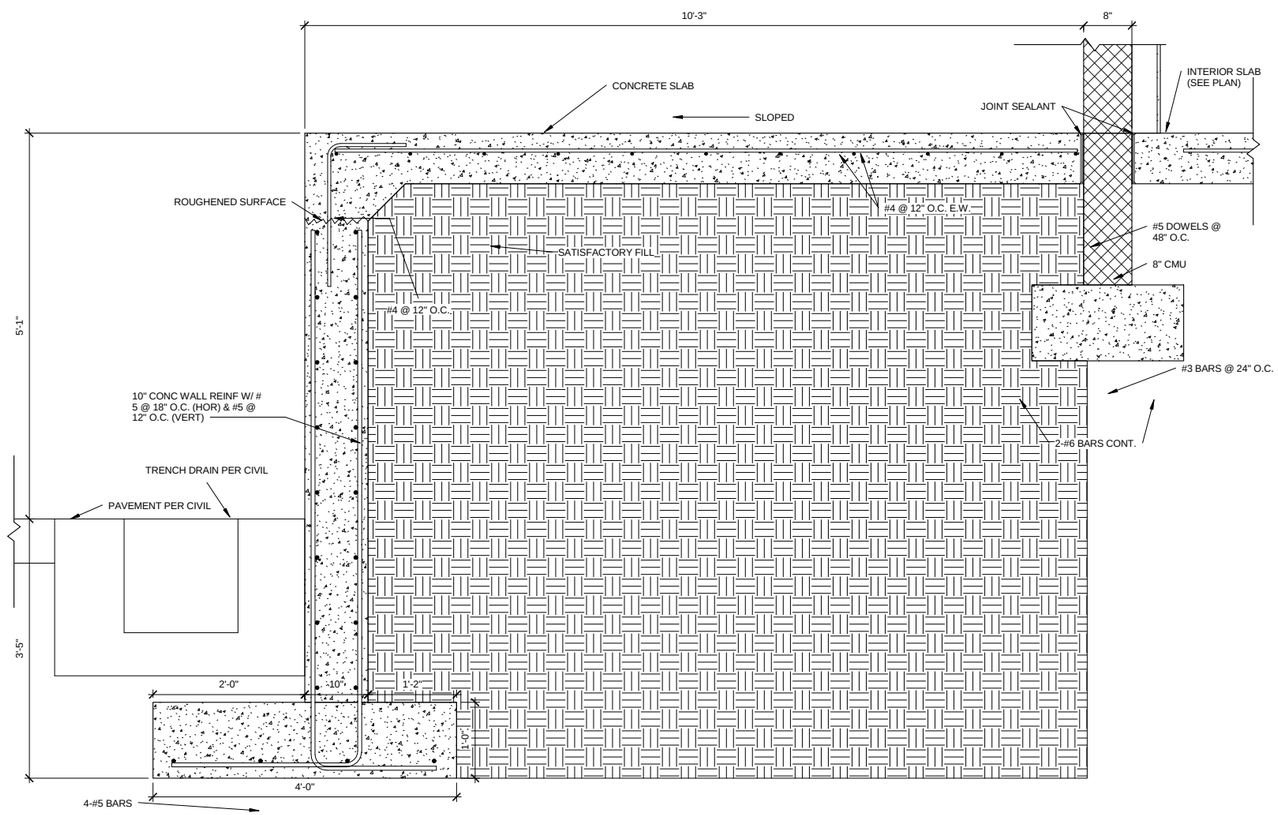

3 T/STL T/WALL

1" = 1'-0"

1 1/2 0 1 2

SCALE: 1"=1'-0"

US Army Corps of Engineers ®
HUNTSVILLE CENTER

SYMBOL	DESCRIPTION	DATE	BY

DATE: MAR 2013
SOLICITATION NO.: N/A
CONTRACT NO.: N/A
CATEGORY CODE:

DESIGN BY: MER
CKD BY: JHU
DRAWN BY: MER
PLOT DATE: 02/2014 9:37:36 AM
SBMT BY:
PLOT SCALE: 1" = 1'-0"
SIZE: 24" X 36"
FILE NAME:

U.S. ARMY CORPS OF ENGINEERS
ENGINEERING AND SUPPORT CENTER

4820 UNIVERSITY SQ.
HUNTSVILLE, AL 35816

TRAINING SUPPORT CENTER (TSC) SMALL

BUILDING SECTIONS

PLATE REFERENCE NUMBER

S-301

SHEET 9 OF 43

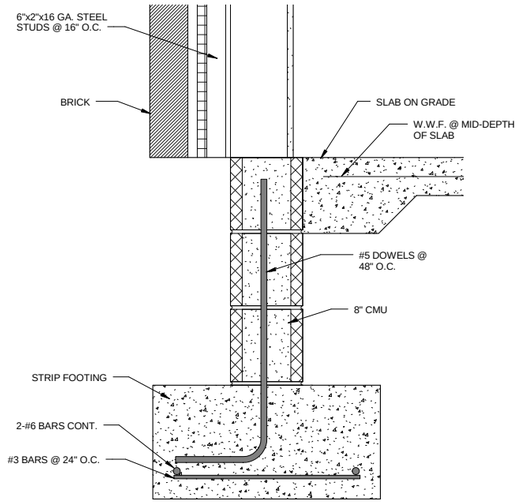

1 FOUNDATION/SLAB SECTION
1 1/2" = 1'-0"

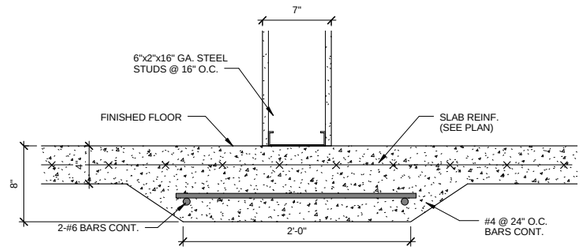

2 THICKENED SLAB SECTION
1 1/2" = 1'-0"

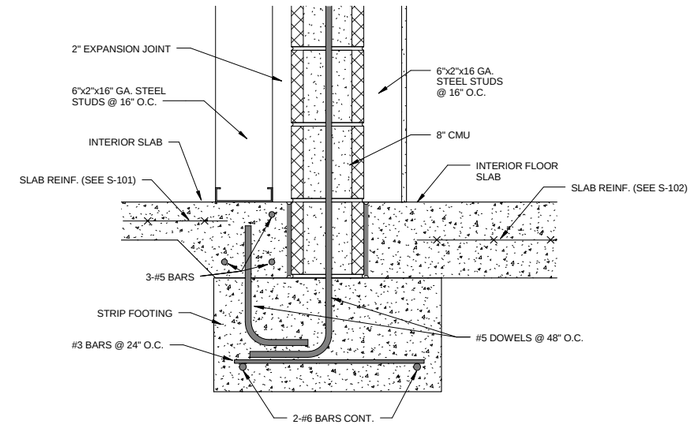

3 INTERIOR SPREAD FOOTING
1 1/2" = 1'-0"

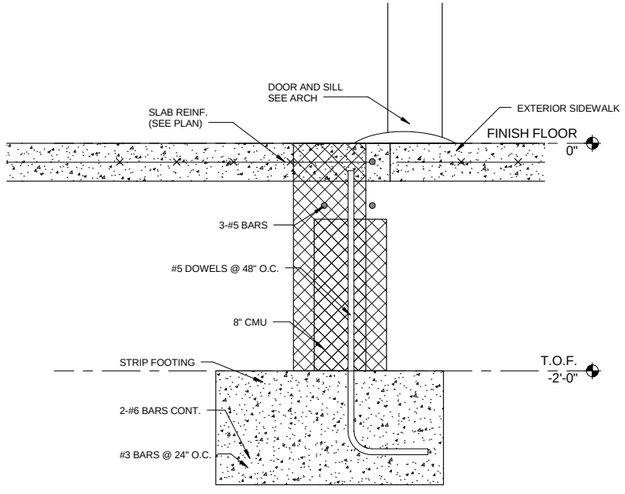

4 FOUNDATION/SLAB SECTION AT PORCH
1 1/2" = 1'-0"

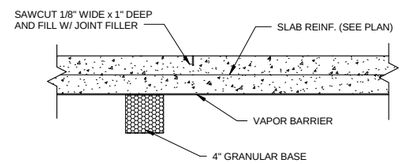

5 TYPICAL CONTROL JOINT
1 1/2" = 1'-0"

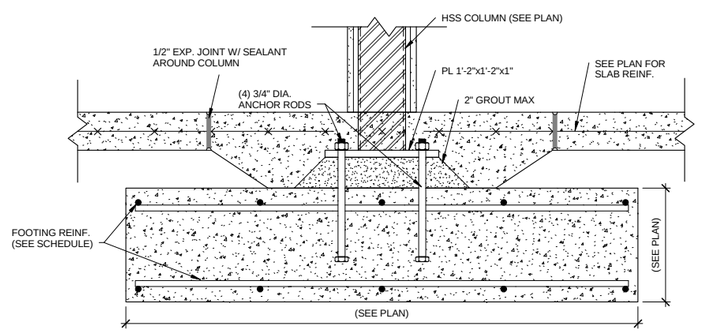

6 INTERIOR SPREAD FOOTING
1 1/2" = 1'-0"

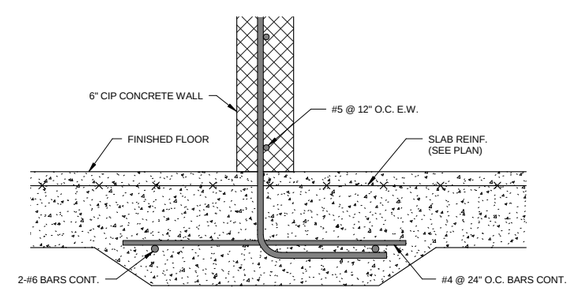

7 INTERIOR SPREAD FOOTING
1 1/2" = 1'-0"

1 0 1
SCALE: 1 1/2"=1'-0"

US Army Corps of Engineers ®
HUNTSVILLE CENTER

SYMBOL	DESCRIPTION	DATE	BY

DATE: MAR 2013
SOLICITATION NO.: N/A
CONTRACT NO.: N/A
CATEGORY CODE:
DESIGN BY: MER
DRAWN BY: MER
CKD BY: JHU
PLOT DATE: 6/2/2014 9:38:02 AM
SBMT BY:
PLOT SCALE: 1 1/2" = 1'-0"
SIZE: 30" x 24"
FILE NAME:

U.S. ARMY CORPS OF ENGINEERS
ENGINEERING AND SUPPORT CENTER
4820 UNIVERSITY SQ.
HUNTSVILLE, AL 35816

TRAINING SUPPORT CENTER (TSC) SMALL

FOUNDATION SECTIONS

PLATE REFERENCE NUMBER
S-302
SHEET 10 OF 43

FOUNDATION WALL SCHEDULE

TYPE	COUNT	STRUCTURAL USAGE	WIDTH	LENGTH	VOLUME (W/GROUT)	COMMENTS
Foundation - 8" CMU	12	Bearing	8"	382'-8"	422 CF	
Foundation - 10" Concrete	3	Bearing	10"	57'-5"	306 CF	
INT-CMU 6in	3	Bearing	6"	50'-0"	236 CF	
INT-CMU 8in	2	Bearing	8"	49'-3"	58 CF	
TSC EXT-MASONRY SPRAY FOAM	4	Bearing	1'-0"	307'-11"	4557 CF	
TSC EXT-METAL WALL PANEL	3	Bearing	1'-1"	224'-3"	770 CF	
TSC EXT-METAL WALL PANEL W/WOOD STUD	3	Bearing	1'-1"	224'-3"	1304 CF	
TSC INTERIOR-INSULATED DRYWALL W2	1	Bearing	7"	98'-1"	672 CF	
Grand total				1393'-10"	8325 CF	

WALL FOOTING SCHEDULE

TYPE	DIMENSIONS			VOLUME	REINFORCING				DEPTH OF FOUNDATION
					LONGITUDINAL		TRANSVERSE		
	WIDTH	DEPTH	LENGTH		QTY	SIZE	SIZE	SPACING	
Strip Footing	2'-0"	1'-0"	426'-2"	785 CF	3	5	6	1'-0"	

US Army Corps of Engineers ®
HUNTSVILLE CENTER

SYMBOL	DESCRIPTION	DATE	BY

DATE: MAR 2013
SOLICITATION NO.: N/A
CONTRACT NO.: N/A
CATEGORY CODE:
DESIGN BY: MER
DRAWN BY: MER
CKD BY: JHU
SBMT BY:
PLOT DATE: 6/2/2014 9:38:07 AM
PLOT SCALE:
FILE NAME:
SIZE: D 22" X 34"

U.S. ARMY CORPS OF ENGINEERS
ENGINEERING AND SUPPORT CENTER
4820 UNIVERSITY SQ
HUNTSVILLE AL 35816

TRAINING SUPPORT CENTER (TSC) SMALL

SCHEDULES

PLATE REFERENCE NUMBER
S-601
SHEET 11 OF 43

BUILDING DATA

1. OCCUPANCY: MIXED USE. A MULTIPURPOSE ADMINISTRATION, WAREHOUSE BUILDING

2. CONSTRUCTION CLASSIFICATION: SEE SHEET A-102

DUE TO THE HVAC'S PLENUM DESIGN, COMBUSTIBLE MATERIALS (TO INCLUDE WOOD FRAMING/BLOCKING) ARE NOT ALLOWED WITHIN THE SPACE.

3. FIRE PREVENTION SYSTEM: AUTOMATIC SPRINKLER SYSTEM

4. TOTAL SIZES: ADMINISTRATION AREA: 7578 SF
WAREHOUSE: 5720 SF

Total = 13,298 SF

5. MAXIMUM TRAVEL DISTANCE IS 200 FEET.

6. SHELL FOR THIS FLOOR PLAN IS BASED ON ZONE 3 CLIMATIC CONDITIONS. WALL THICKNESS MAY VARY BASED ON PROJECT LOCATION AND CLIMATIC CONDITIONS.

WALL TYPES

- W1 — WALL TYPE 1 (DETAIL 7 SHEET A-502)
- W2 — WALL TYPE 2 (DETAIL 6 SHEET A-502)
- W3 — WALL TYPE 3 (DETAIL 5 SHEET A-502)
- W4 — WALL TYPE 4 (DETAIL 11 SHEET A-502)
- W5 — WALL TYPE 5 (DETAIL 12 SHEET A-502)

CDC 6-10 MEDIUM BIM DESIGN

ROOM	DESCRIPTION	PROGRAM AREA (SF2)	ACTUAL AREA (SF2)
101	BREAK ROOM	121 SF	120.6 SF
102	STORAGE	23 SF	22.9 SF
103	TELECOM.	99 SF	99.2 SF
104	WOMEN	179 SF	178.9 SF
105	MEN	179 SF	178.8 SF
106	OFFICE	267 SF	267.5 SF
107	ADMINISTRATION	510 SF	510.6 SF
108	LOBBY	180 SF	179.5 SF
109	CORRIDOR	845 SF	894.7 SF
110	VESTIBULE	70 SF	70.1 SF
111	VESTIBULE	70 SF	70.6 SF
112	TRAINING ROOM	2273 SF	Not Enclosed
113	TRAINING ROOM	2267 SF	Not Enclosed
114	MECH. RM.	313 SF	314.7 SF
115	PUMP RM.	198 SF	197.1 SF
116	ELECT. RM.	143 SF	142.4 SF
117	SECURE STOR.	140 SF	142.6 SF
118	OFFICE	129 SF	128.7 SF
119	TOILET	32 SF	32.4 SF
120	WAREHOUSE	4726 SF	4728 SF
124	WAITING	43 SF	42.5 SF
125	JAN	17 SF	17.4 SF
126	SHOWER	17 SF	17.2 SF
126	SHOWER	15 SF	15.1 SF

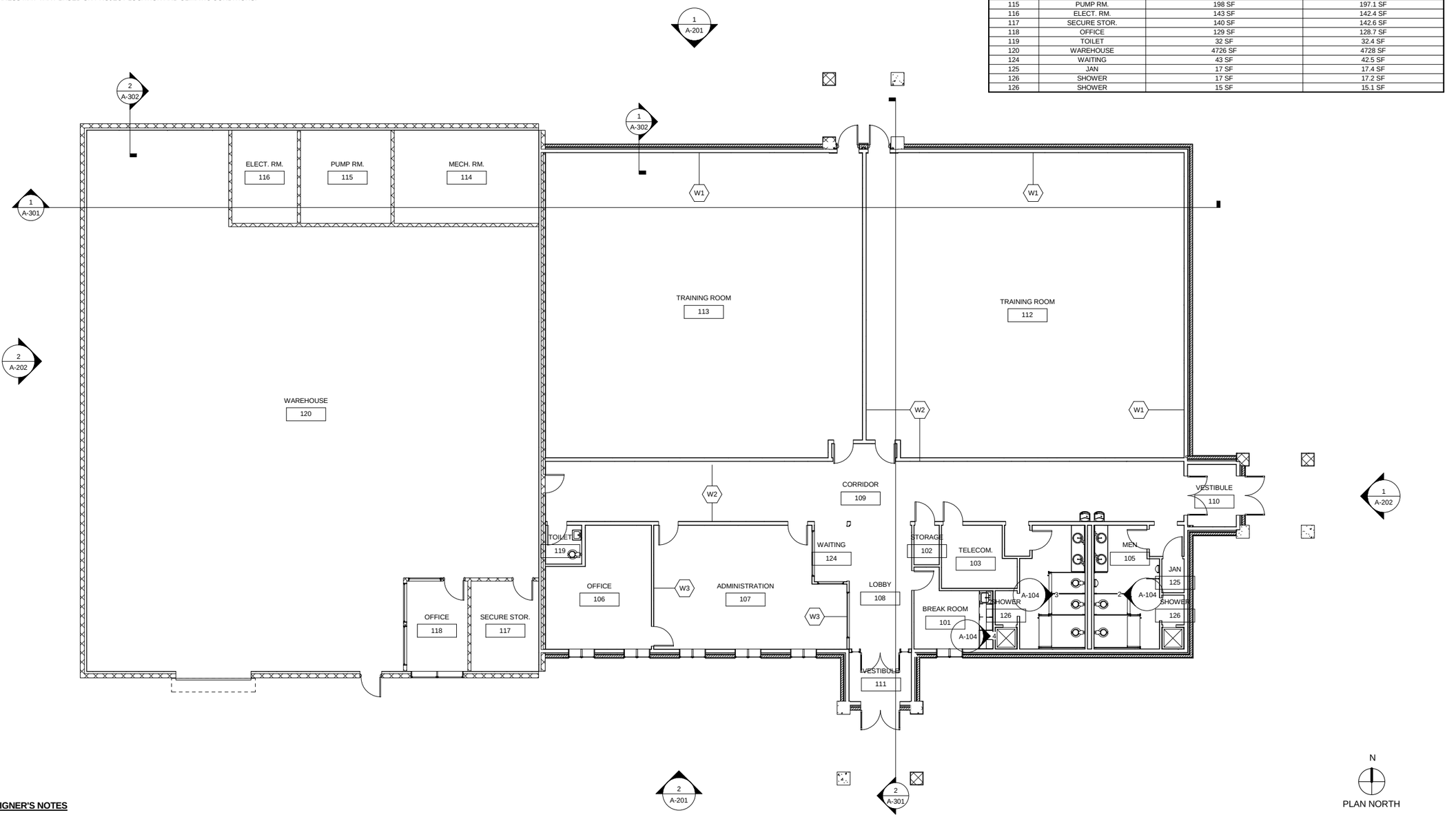

OVERALL FLOOR PLAN

SCALE: 1/8" = 1'-0"

DESIGNER'S NOTES

THE ASSUMED STANDOFF DISTANCE FOR PURPOSES OF AFTP IS 82'. EXTERNAL CONSTRUCTION WALL TYPE SHALL MEET REQUIREMENTS OF UFC 4-010-01

US Army Corps of Engineers ®
HUNTSVILLE CENTER

SYMBOL	DESCRIPTION	DATE	BY

DESIGN BY: WALL
DRAWN BY: ES
CKD BY:
SBMT BY:
DATE: JUNE 2014
SOLICITATION NO.: N/A
PLOT DATE: 6/3/2014 10:45:04 AM
PLOT SCALE: 1/8" = 1'-0"
SIZE: D 22" x 34"
CONTRACT NO.: N/A
CATEGORY CODE:
FILE NAME:

U.S. ARMY CORPS OF ENGINEERS
ENGINEERING AND SUPPORT CENTER
4820 UNIVERSITY SQ.
HUNTSVILLE, AL 35816

TRAINING SUPPORT CENTER (TSC) SMALL

GENERAL PLAN INFORMATION

PLATE REFERENCE NUMBER
A-101
SHEET 12 OF 55

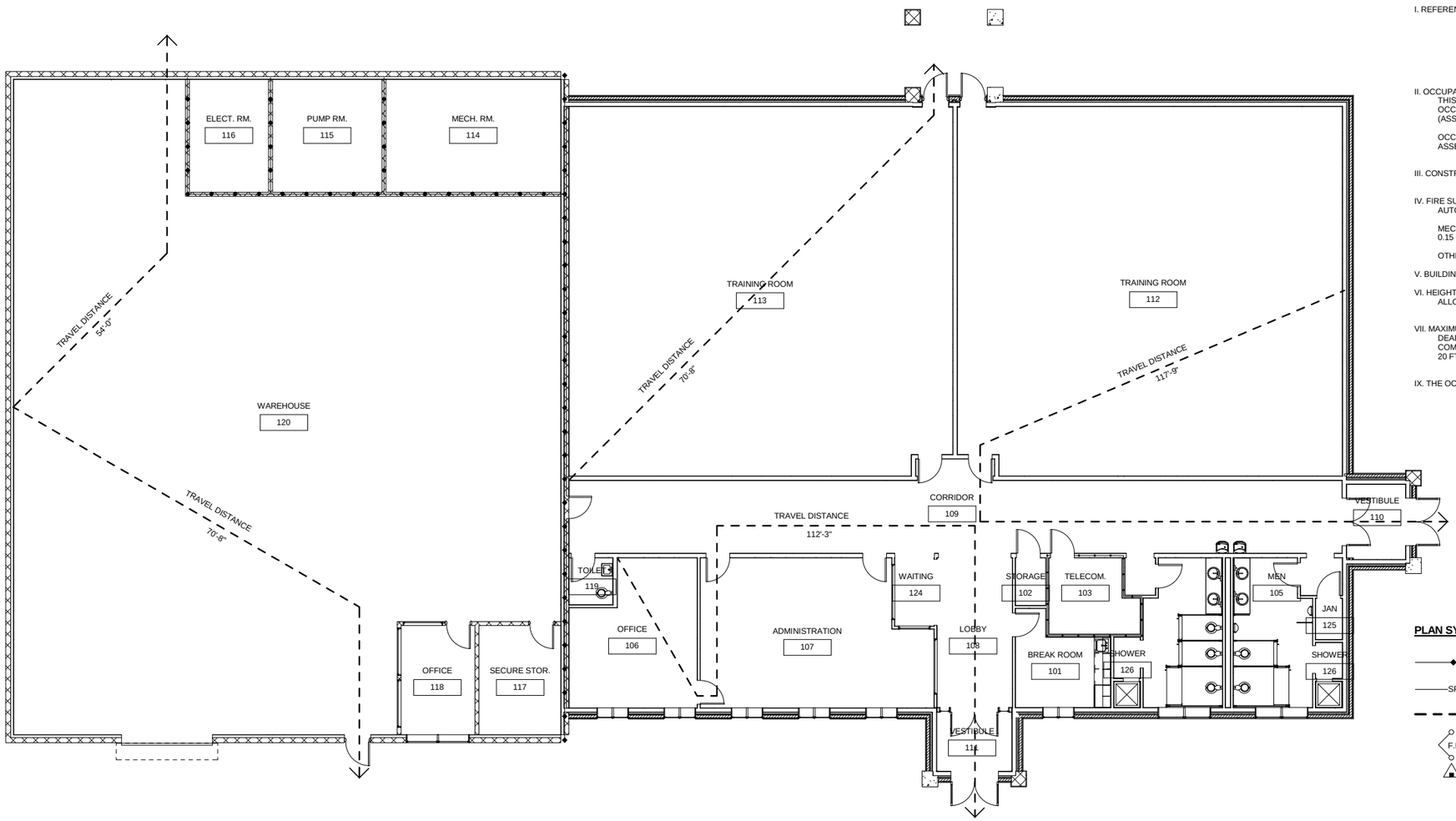

LIFE SAFETY PLAN

SCALE: 1/8" = 1'-0"

CODE SUMMARY

I. REFERENCE : INTERNATIONAL BUILDING CODE (2009)
NFPA 101 LIFE SAFETY CODE (2009)
NFPA 10 PORTABLE FIRE EXTINGUISHER (2007)
NFPA 13 FIRE SPRINKLERS SYSTEMS (2010)
NFPA 70 NATIONAL ELECTRICAL CODE (2008)
NFPA 72 NATIONAL FIRE ALARM CODE (2010)
UFC 3-600-01 FIRE PROTECTION FOR FACILITIES

II. OCCUPANCY (IBC):
THIS BUILDING IS CLASSIFIED AS MIXED OCCUPANCY (SEC. 508-IBC). E (EDUCATIONAL) OCCUPANCY IS SEPARATED. REMAINDER OF BUIDLING IS MIXED NON-SEPARATED A-3 (ASSEMBLY) AND B (BUSINESS)

OCCUPANCY (NFPA 101):
ASSEMBLY / BUSINESS MIXED.

III. CONSTRUCTIONTYPE II-B NON - COMBUSTIBLE

IV. FIRE SUPPRESSION STSTEM:
AUTOMATIC SPRINKLER SYSTEM THROUGHOUT

MECH. ROOM, STORAGE ROOMS: ORDINARY HAZARD GROUP 1, 0.15 GPM/SF @ 3000 SF

OTHER AREAS: LIGHT HAZARD, .10 GPM/SF @ 3000 SF

V. BUILDING SIZE:13,298 S.F. OVERALL HEATED AREA

VI. HEIGHT & AREA: ALLOWABLE HEIGHT3 STORIES, 75' MAX.
ALLOWABLE AREA:28,500 GSF

VII. MAXIMUM TRAVEL DISTANCE 250 FEET
DEAD END CORRIDOR LIMIT 20 FT.
COMMON PATH OF TRAVEL LIMIT 75 FT < 50 OCCUPANTS
20 FT > 50 OCCUPANTS

IX. THE OCCUPANT LOAD IS 150 PEOPLE.

PLAN SYMBOL KEY

1 HOUR TYPE "X" FIRE RATED DRYWALL

SP — SMOKE PARTITION, (DOORS SELF CLOSING)

TRAVEL DISTANCE

F.D. — FIRE DEPARTMENT CONNECTION

DRY CHEMICAL FIRE EXTINGUISHER 4A: 20B: C AND CABINET
MAX TRAVEL DISTANCE: 75 FEET
MAX FLOOR AREA/EXTINGUISHER 6000 S.F.

K — WET CHEMICAL FIRE EXTINGUISHER AND CABINET CLASS K (COOKING FIRE)

N
PLAN NORTH

8 6 4 2 0 8 16
SCALE: 1/8"=1'-0"

US Army Corps of Engineers ®
HUNTSVILLE CENTER

SYMBOL	DESCRIPTION	DATE	BY

DESIGN BY: N/A
DRAWN BY: ES
CKD BY:
SBMT BY:
DATE: JUNE 2014
SOLICITATION NO.: N/A
CONTRACT NO.: N/A
CATEGORY CODE:
PLOT DATE: 6/3/2014 10:45:05 AM
PLOT SCALE: 1/8" = 1'-0"
SIZE: D 22" X 34"
FILE NAME:

U.S. ARMY CORPS OF ENGINEERS ENGINEERING AND SUPPORT CENTER
4820 UNIVERSITY SQ. HUNTSVILLE, AL 35816

TRAINING SUPPORT CENTER (TSC) SMALL

LIFE SAFETY PLAN

PLATE REFERENCE NUMBER
A-102
SHEET 13 OF 55

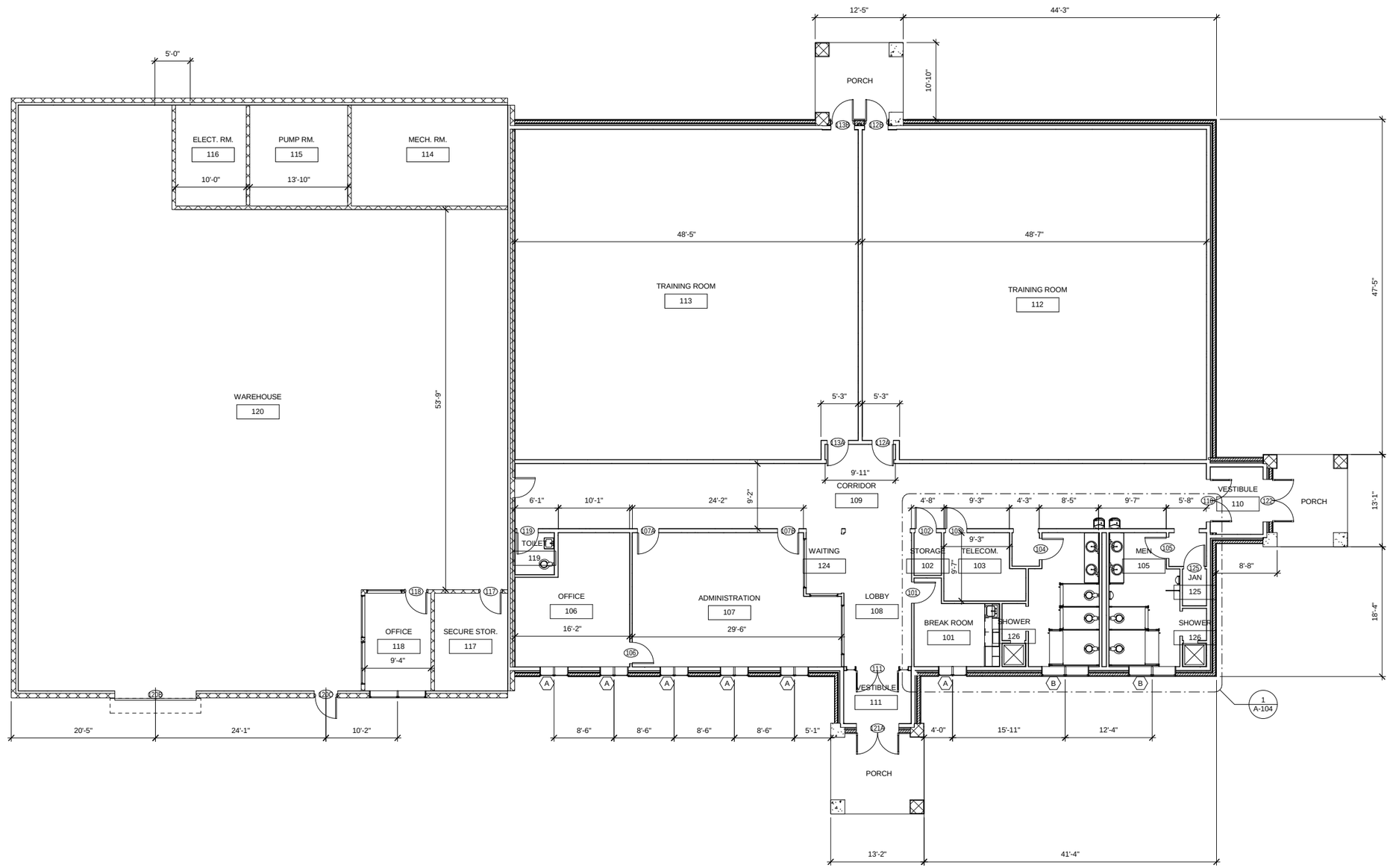

FLOOR PLAN

SCALE: 1/8" = 1'-0"

N

PLAN NORTH

8 6 4 2 0 8 16

SCALE: 1/8"=1'-0"

US Army Corps of Engineers ®
HUNTSVILLE CENTER

SYMBOL	DESCRIPTION	DATE	BY

DESIGN BY: DATE: JANE 2014
DRAWN BY: ES
CKD BY:
SBMT BY:
SOLICITATION NO.: N/A
CONTRACT NO.: N/A
CATEGORY CODE:
PLOT DATE: 6/3/2014 10:45:06 AM
PLOT SCALE: 1/8" = 1'-0"
SIZE: D 22" X 34"
FILE NAME:

U.S. ARMY CORPS OF ENGINEERS
ENGINEERING AND SUPPORT CENTER
4820 UNIVERSITY SQ.
HUNTSVILLE, AL 35816

TRAINING SUPPORT CENTER (TSC) SMALL

FLOOR PLAN

PLATE REFERENCE NUMBER
A-103
SHEET 14 OF 55

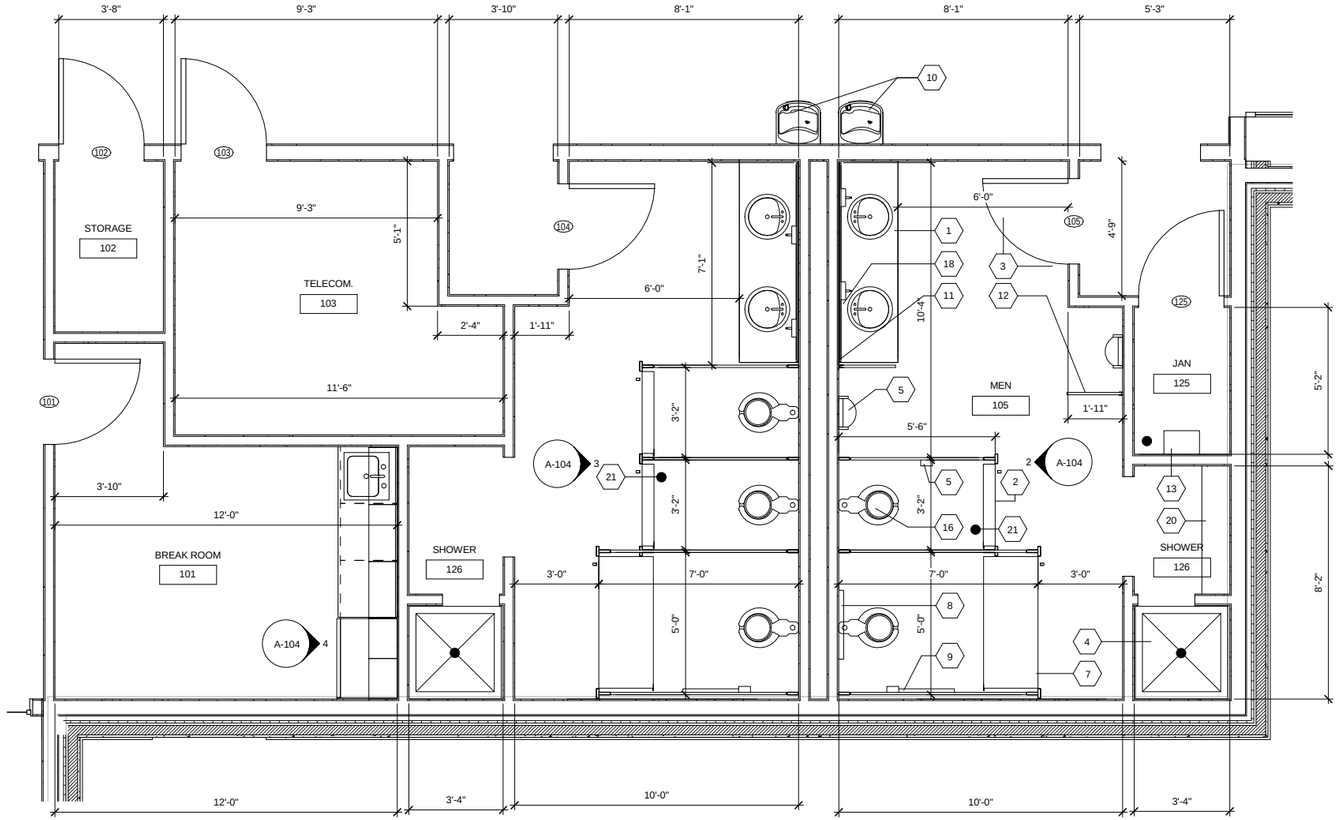

1 A-103 ENLARGED FLOOR PLAN
SCALE: 3/8" = 1'-0"

KEY NOTES

1. SOLID SURFACE VANITY COUNTER WITH INTERGRAL BOWLS
2. SOLID PLASTIC TOILET PARTITIONS-ALL PARTITIONS SHALL BE CEILING HUNG OR OVERHEAD BRACED
3. CERAMIC TILE FLOOR FINISH. SIMILAR TO DETAIL 2 ON A-502
4. FIBERGLASS SHOWER UNIT
5. ROLL TISSUE HOLDER
6. STANDARD 24" PARTITION DOOR
7. HANDICAPPED PARTITION DOOR WITH A MIN. CLEARANCE OF 32"
8. 24" LONG STAINLESS STEEL GRAB BAR MOUNT CENTER 20" AFF
9. 36" LONG STAINLESS STEEL GRAB BAR MOUNT CENTER 20" AFF
10. WATER COOLERS-ONE ADA COOLER IS REQUIRED
11. FULL-HEIGHT MIRROR
12. URINAL DIVIDER
13. JANITOR SINK WITH SHELVES ABOVE
14. PAPER TOWEL DISPENSER
15. URINAL
16. WATER CLOSET
17. BASE AND WALL CABINETS
18. SOAP DISPENSER
19. REFRIGERATOR
20. DRY AREA WITH FIBERGLASS BENCH AND WARDROBE HANGER
21. FLOOR DRAIN-THE CONTRACTOR HAS THE OPTION OF RECESSING THE SLAB 1-1/2" AND SLOPING THE MORTAR BED TO THE DRAIN (DETAIL 9 ON A-502) OR SLOPING THE SLAB TOWARDS THE FLOOR DRAIN AND THIN-SET THE TILE, DETAIL 2 ON A-502

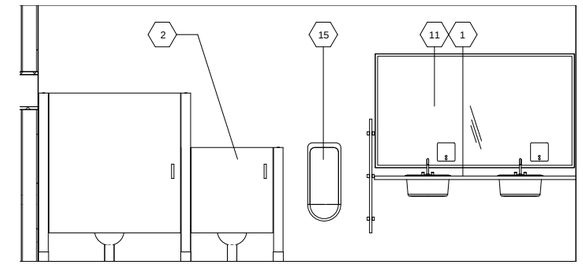

2 A-101 MALE TOILET
SCALE: 3/8" = 1'-0"

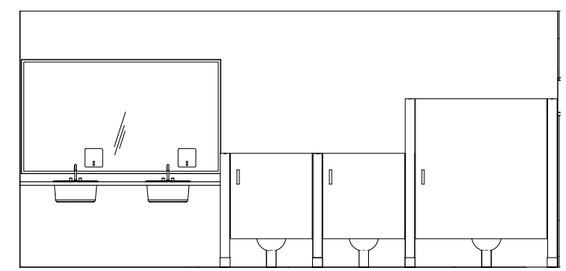

3 A-101 FEMALE TOILET
SCALE: 3/8" = 1'-0"

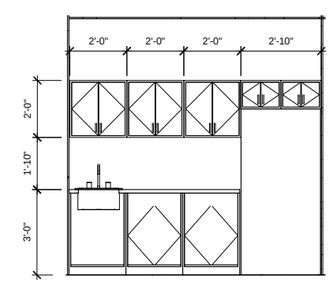

4 A-101 BREAK ROOM
SCALE: 3/8" = 1'-0"

US Army Corps of Engineers ®
HUNTSVILLE CENTER

SYMBOL	DESCRIPTION	DATE	BY

DESIGN BY: NAS
DRAWN BY: ES
CKD BY:
SBMT BY:
DATE: JUNE 2014
SOLICITATION NO.: N/A
CONTRACT NO.: N/A
CATEGORY CODE:
PLOT DATE: 6/3/2014 10:45:07 AM
PLOT SCALE: 3/8" = 1'-0"
SIZE: D 22" x 34"
FILE NAME:

U.S. ARMY CORPS OF ENGINEERS
ENGINEERING AND SUPPORT CENTER
4820 UNIVERSITY SQ.
HUNTSVILLE, AL 35816

TRAINING SUPPORT CENTER (TSC) SMALL

LARGE SCALE PLANS AND ELEVATIONS

PLATE REFERENCE NUMBER
A-104
SHEET 15 OF 55

GENERAL NOTES

1. MAIN BUILDING ROOF SLOPES ARE 3:12
2. ALL VALLEYS SHALL HAVE METAL FLASHING
3. GUTTERS AND DOWN SPOUTS SHALL BE SIZES AS REGIONAL BUILDING CODES MANDATE

ENERGY CONSERVATION NOTES

1. THE MINIMUM THERMAL RESISTANCE (R-VALUE) OF THE INSULATING MATERIAL INSTALLED EITHER BETWEEN THE ROOF FRAMING OR CONTINUOUSLY ON THE ROOF ASSEMBLY SHALL MEET MINIMUM REQUIREMENT BASED ON CLIMATE ZONE

CLIMATE ZONE	1	2	3	4	5	6	7	8
INSULATION ENTIRELY ABOVE DECK	R-20ci	R-20ci	R-20ci	R-25ci	R-25ci	R-30ci	R-35ci	R-35ci

ENERGY CONSERVATION NOTES

1. REFER TO ELECTRICAL DESIGN FOR ENERGY CONSERVATION MEASURES.

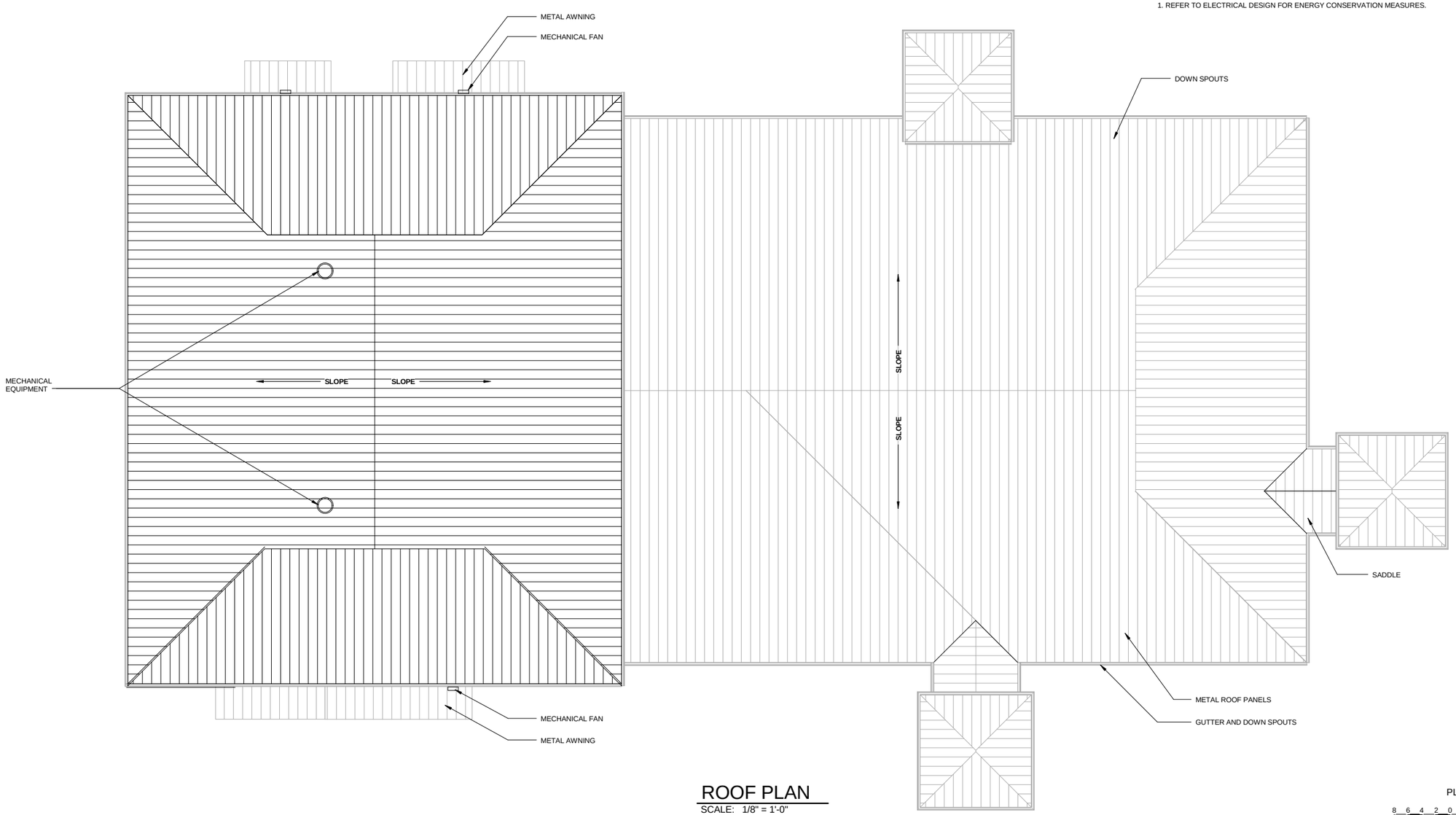

ROOF PLAN
SCALE: 1/8" = 1'-0"

N
PLAN NORTH
8 6 4 2 0 8 16
SCALE: 1/8"=1'-0"

US Army Corps of Engineers ®
HUNTSVILLE CENTER

SYMBOL	DESCRIPTION	DATE	BY

DESIGN BY: NWS
DRAWN BY: ES
CKD BY:
SBMT BY:
DATE: 13 MAY 2014
SOLICITATION NO.: N/A
CONTRACT NO.: N/A
CATEGORY CODE:
PLOT DATE: 6/3/2014 10:45:08 AM
PLOT SCALE: As indicated
SIZE: D 22" x 34"
FILE NAME:

U.S. ARMY CORPS OF ENGINEERS
ENGINEERING AND SUPPORT CENTER
4820 UNIVERSITY SQ.
HUNTSVILLE, AL 35816

TRAINING SUPPORT CENTER (TSC) SMALL

ROOF PLAN

PLATE REFERENCE NUMBER
A-105
SHEET 16 OF 55

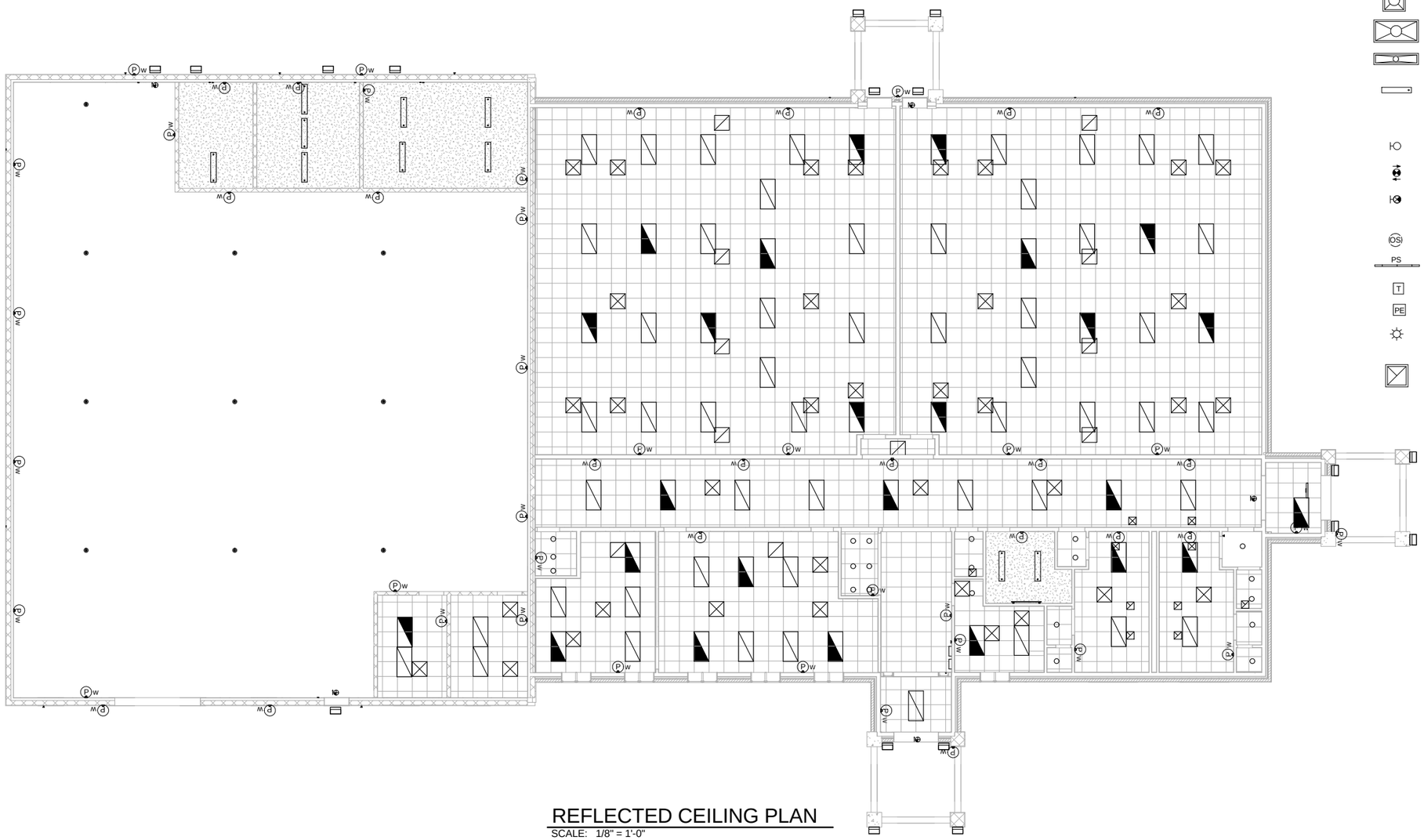

REFLECTED CEILING PLAN

SCALE: 1/8" = 1'-0"

SYMBOL LEGEND

- 2X2 CEILING GRID
- GWB CEILING
- EXPOSED CONSTRUCTION
- RETURN AIR DIFFUSER - REFERENCE MECHANICAL
- SUPPLY AIR DIFFUSER - REFERENCE MECHANICAL
- CEILING ACCESS PANEL
- 2X2 LIGHTING FIXTURE
- 2X4 LIGHTING FIXTURE
- 1X4 LIGHTING FIXTURE
- SUSPENDED LIGHT FIXTURE - REFERENCE ELECTRICAL
- RECESSED LIGHT FIXTURE - REFERENCE ELETRICAL
- WALL LIGHT FIXTURE - REFERENCE ELECTRICAL
- EXIT SIGN
- WALL MOUNTED EXIT SIGN
- SPRINKLER HEAD
- OS — OCCUPANCY SENSOR
- PS — RECESSED PRJECTION SCREEN
- T — THERMOSTAT
- PE — DAYLIGHT PHOTO SENSOR
- EXTERIOR RECESSED SOFFIT FIXTURE
- RETURN AIR DIFFUSER - REFERENCE MECHANICAL

N

PLAN NORTH

8 6 4 2 0 8 16

SCALE: 1/8"=1'-0"

US Army Corps of Engineers ®
HUNTSVILLE CENTER

SYMBOL	DESCRIPTION	DATE	BY

DESIGN BY: N/A
DRAWN BY: ES
CKD BY:
SBMT BY:
DATE: JUNE 2014
SOLICITATION NO.: N/A
CONTRACT NO.: N/A
CATEGORY CODE:
PLOT DATE: 6/3/2014 10:45:09 AM
PLOT SCALE: As indicated
SIZE: D 22" x 34"
FILE NAME:

U.S. ARMY CORPS OF ENGINEERS
ENGINEERING AND SUPPORT CENTER
4820 UNIVERSITY SQ.
HUNTSVILLE, AL 35816

TRAINING SUPPORT CENTER (TSC) SMALL

REFLECTED CEILING PLAN

PLATE REFERENCE NUMBER
A-106

SHEET 17 OF 55

GENERAL NOTES

1. WINDOW TYPE "A" SEE DETAIL 11 SHEET A-503
2. WINDOW TYPE "B" SEE DETAIL 12 SHEET A-503
3. WINDOW TYPE "C" SEE DETAIL 13 SHEET A-503
4. TRANSLUCENT PANELS-SEE DETAIL 14-SHEET A-503
5. DOOR SCHEDULE-SEE SHEET A-601

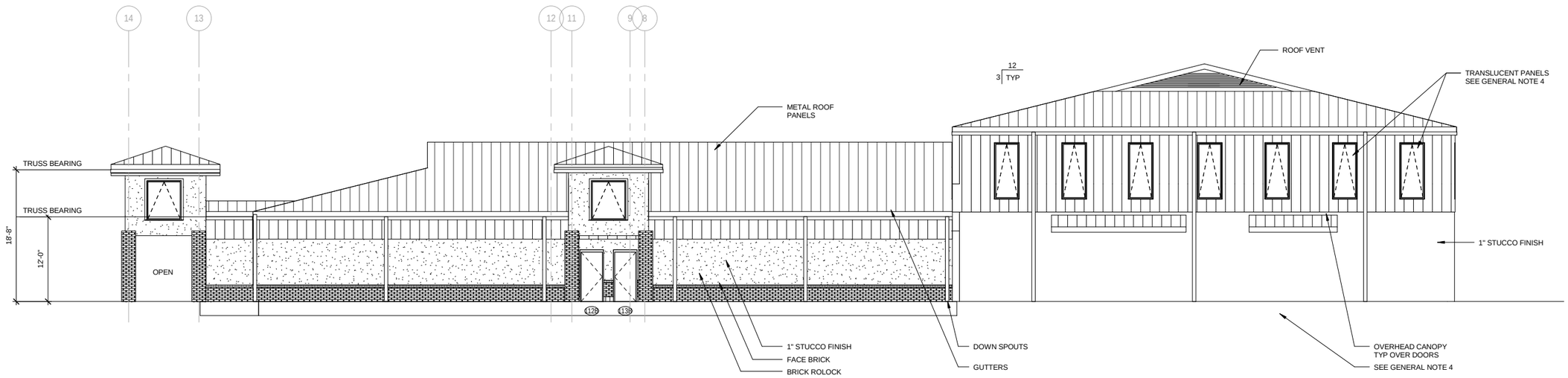

1 A-101 NORTH ELEVATION
SCALE: 1/8" = 1'-0"

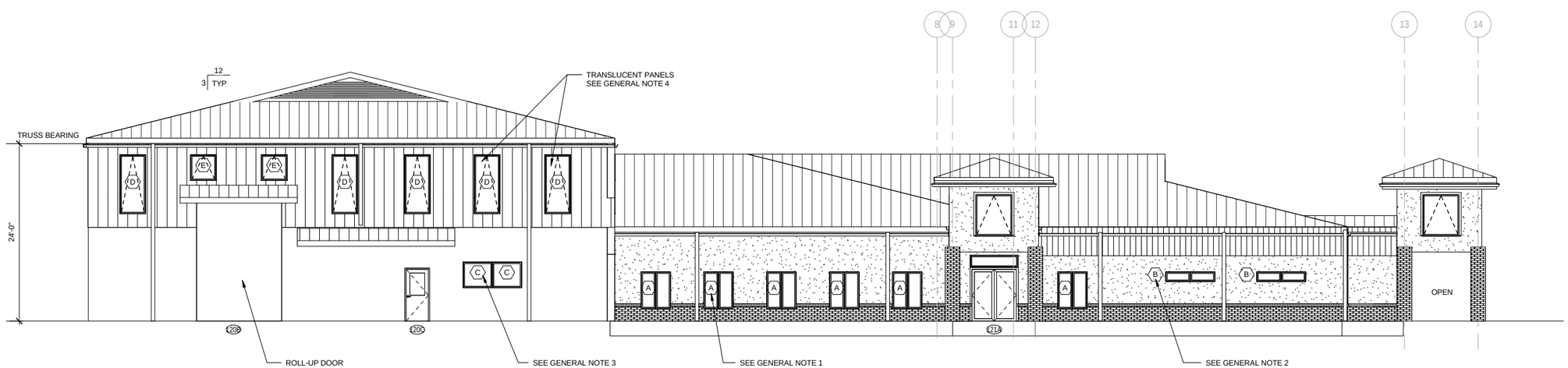

2 A-101 SOUTH ELEVATION
SCALE: 1/8" = 1'-0"

8 6 4 2 0 8 16
SCALE: 1/8"=1'-0"

US Army Corps of Engineers ®
HUNTSVILLE CENTER

SYMBOL	DESCRIPTION	DATE	BY

DESIGN BY: N/A
DATE: DATE: 2014
DRAWN BY: ES
CKD BY:
SOLICITATION NO.: N/A
SBMT BY:
CONTRACT NO.: N/A
PLOT DATE: 6/3/2014 10:45:11 AM
CATEGORY CODE:
PLOT SCALE: 1/8" = 1'-0"
SIZE: D 22" X 34"
FILE NAME:

U.S. ARMY CORPS OF ENGINEERS
ENGINEERING AND SUPPORT CENTER
4820 UNIVERSITY SQ.
HUNTSVILLE, AL 35816

TRAINING SUPPORT CENTER (TSC) SMALL

EXTERIOR ELEVATIONS

PLATE REFERENCE NUMBER
A-201
SHEET 18 OF 55

GENERAL NOTES

1. WINDOW TYPE "A" SEE DETAIL 11 SHEET A-503
2. WINDOW TYPE "B" SEE DETAIL 12 SHEET A-503
3. WINDOW TYPE "C" SEE DETAIL 13 SHEET A-503
4. TRANSLUCENT PANELS-SEE DETAIL 14-SHEET A-503
5. DOOR SCHEDULE-SEE SHEET A-601

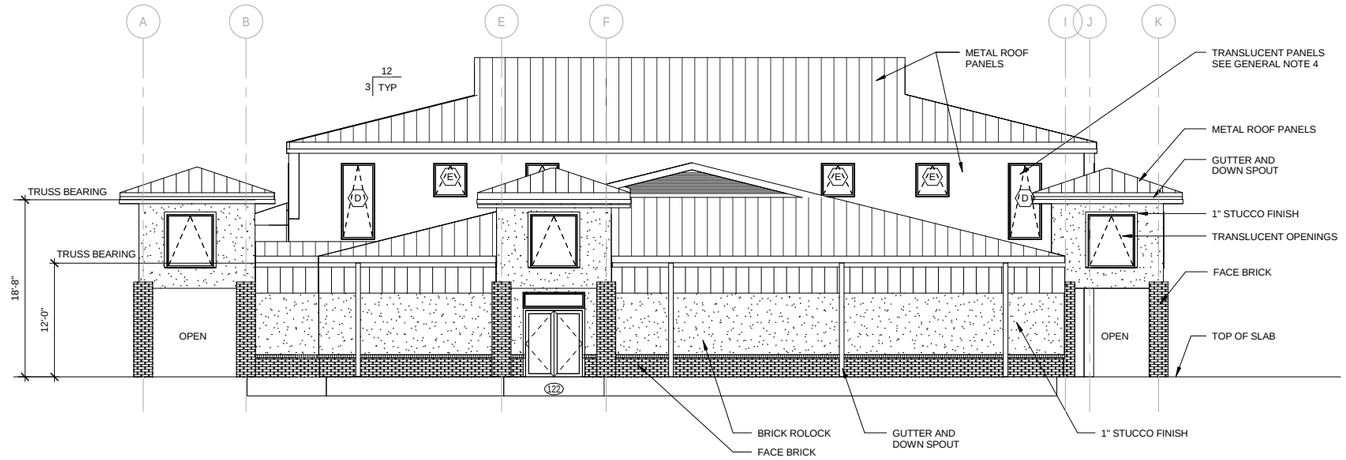

1 A-101 EAST ELEVATION
SCALE: 1/8" = 1'-0"

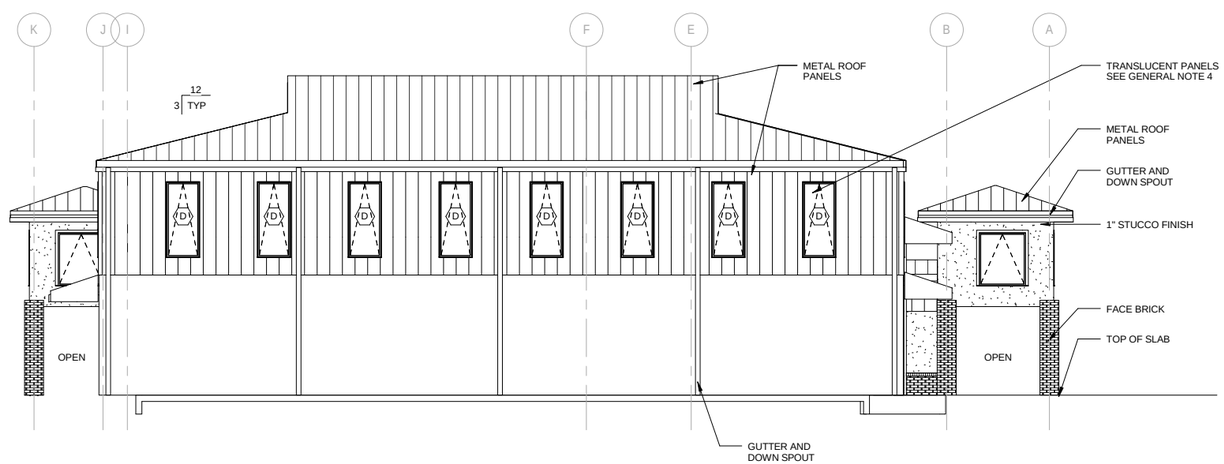

2 A-101 WEST ELEVATION
SCALE: 1/8" = 1'-0"

8 6 4 2 0 8 16
SCALE: 1/8"=1'-0"

US Army Corps of Engineers ®
HUNTSVILLE CENTER

SYMBOL	DESCRIPTION	DATE	BY

DESIGN BY: NEAS
DRAWN BY: ES
CKD BY:
SBMT BY:
DATE: JUNE 2014
SOLICITATION NO.: N/A
CONTRACT NO.: N/A
CATEGORY CODE:
PLOT DATE: 6/3/2014 10:45:12 AM
PLOT SCALE: 1/8" = 1'-0"
SIZE: D 22" X 34"
FILE NAME:

U.S. ARMY CORPS OF ENGINEERS
ENGINEERING AND SUPPORT CENTER
4820 UNIVERSITY SQ.
HUNTSVILLE, AL 35816

TRAINING SUPPORT CENTER (TSC) SMALL

EXTERIOR ELEVATIONS

PLATE REFERENCE NUMBER
A-202

SHEET 19 OF 55

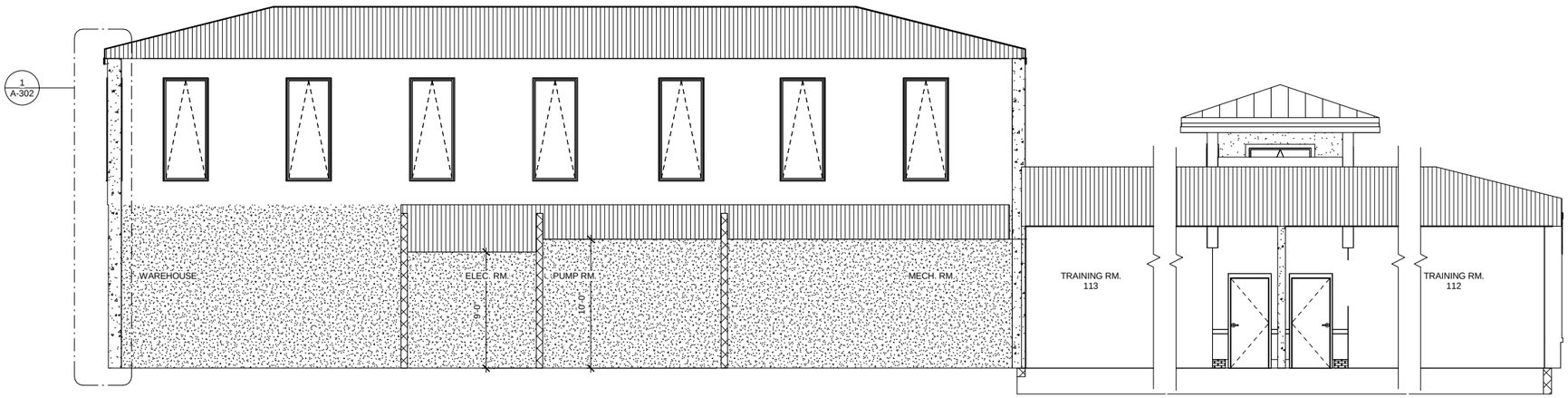

1 A-101 BUILDING SECTION
SCALE: 3/16" = 1'-0"

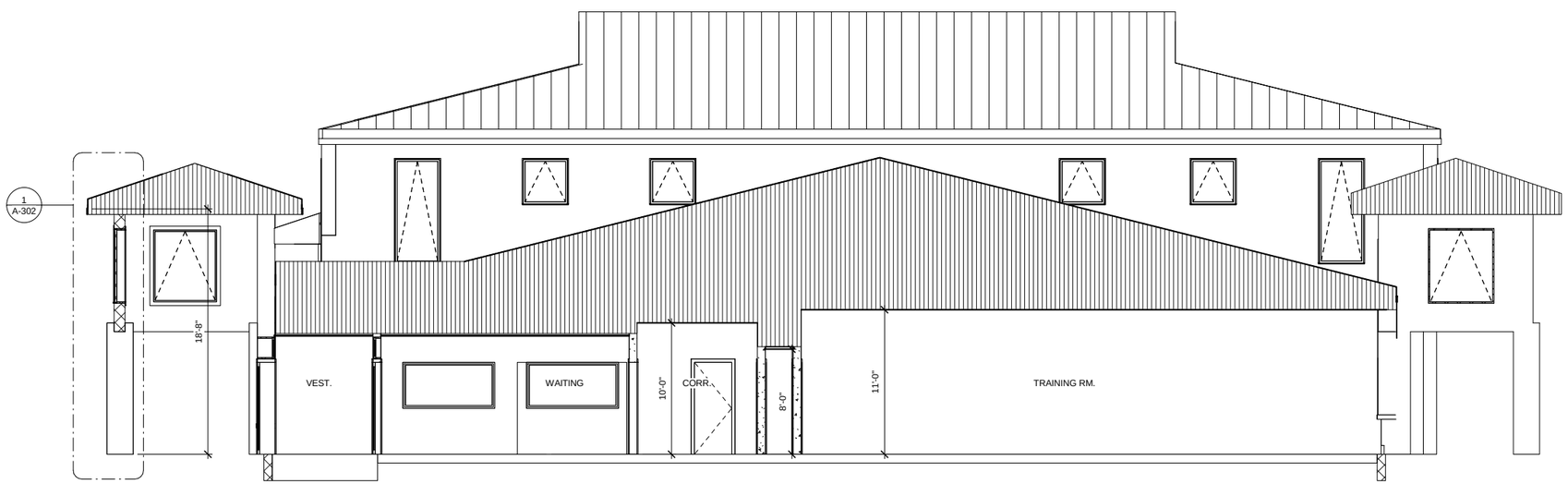

2 A-101 BUILDING SECTION
SCALE: 3/16" = 1'-0"

8 4 0 8
SCALE: 3/16"=1'-0"

US Army Corps of Engineers ®
HUNTSVILLE CENTER

SYMBOL	DESCRIPTION	DATE	BY

DESIGN BY: NWS
DRAWN BY: ES
CKD BY:
SBMT BY:
DATE: JUNE 2014
SOLICITATION NO.: N/A
CONTRACT NO.: N/A
CATEGORY CODE:
PLOT DATE: 6/3/2014 10:45:13 AM
PLOT SCALE: 3/16" = 1'-0"
SIZE: D 22"X 34"
FILE NAME:

U.S. ARMY CORPS OF ENGINEERS
ENGINEERING AND SUPPORT CENTER
4820 UNIVERSITY SQ.
HUNTSVILLE, AL 35816

TRAINING SUPPORT CENTER (TSC)
SMALL

BUILDING SECTIONS

PLATE REFERENCE NUMBER
A-301
SHEET 20 OF 55

ENERGY CONSERVATION NOTES

1. ALL PENETRATIONS OF AIR BARRIER SHALL BE CAULKED, GASKETED, AND COMPATIBLE WITH CONSTRUCTION MATERIALS AND LOCATION.
2. PROPOSED WALL ASSEMBLY MIN R VALUE: 22

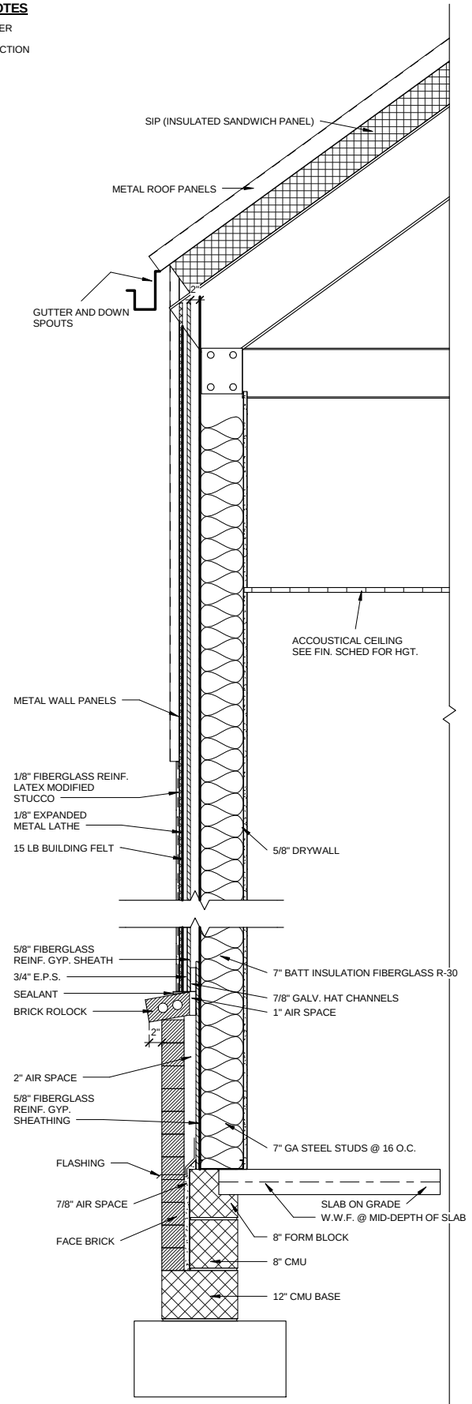

1 A-101 ADMIN WALL DETAIL
SCALE: 1" = 1'-0"

2 1 0 2 4
SCALE: 1/2"=1'-0"

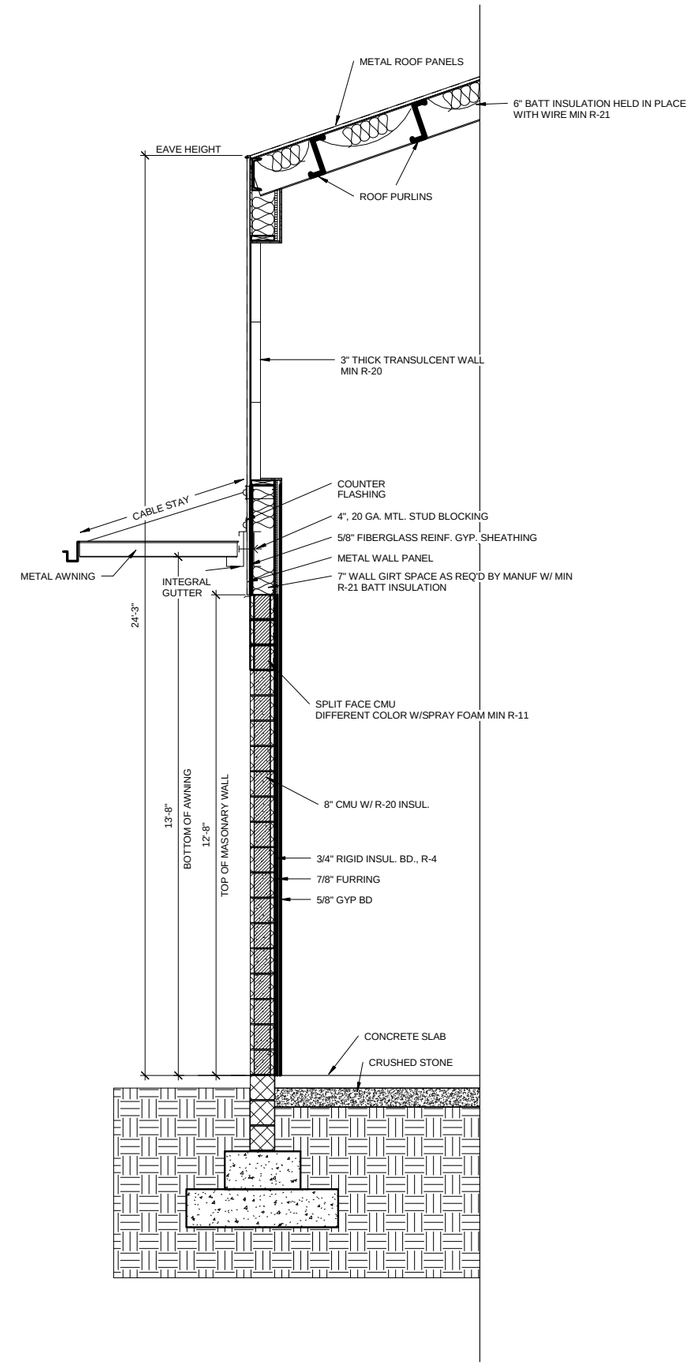

2 A-101 WAREHOUSE WALL DETAIL
SCALE: 1/2" = 1'-0"

1 1/2 0 1 2
SCALE: 1"=1'-0"

US Army Corps of Engineers ®
HUNTSVILLE CENTER

SYMBOL	DESCRIPTION	DATE	BY

DESIGN BY: MAS
DRAWN BY: ES
CKD BY:
SBMT BY:
DATE: JUNE 2014
SOLICITATION NO.: N/A
CONTRACT NO.: N/A
CATEGORY CODE:
PLOT DATE: 6/3/2014 10:45:14 AM
PLOT SCALE: As indicated
SIZE: D 22" x 34"
FILE NAME:

U.S. ARMY CORPS OF ENGINEERS
ENGINEERING AND SUPPORT CENTER
4820 UNIVERSITY SQ.
HUNTSVILLE, AL 35816

TRAINING SUPPORT CENTER (TSC) SMALL

WALL SECTIONS

PLATE REFERENCE NUMBER
A-302
SHEET 21 OF 55

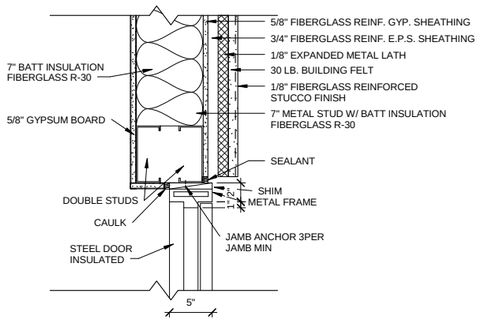

1 CONNECTION DETAIL 1
NOT TO SCALE

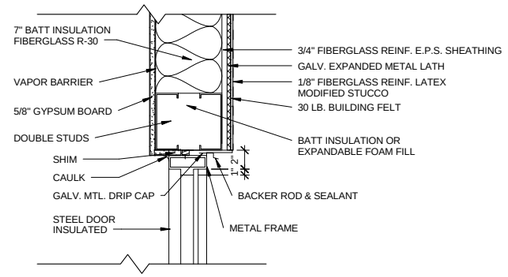

2 CONNECTION DETAIL 2
NOT TO SCALE

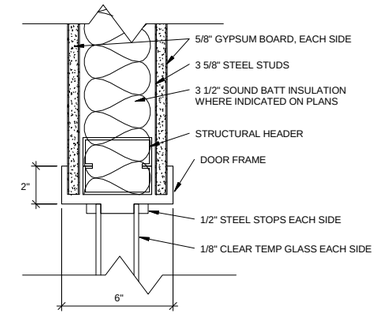

3 CONNECTION DETAIL 3
NOT TO SCALE

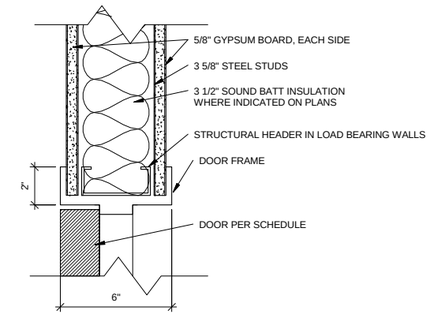

4 CONNECTION DETAIL 4
NOT TO SCALE

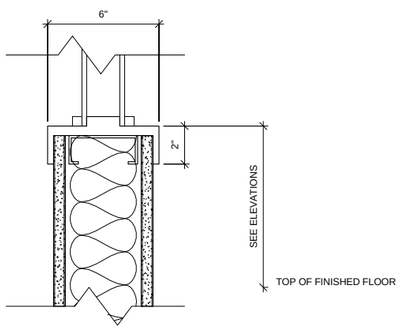

5 CONNECTION DETAIL 5
NOT TO SCALE

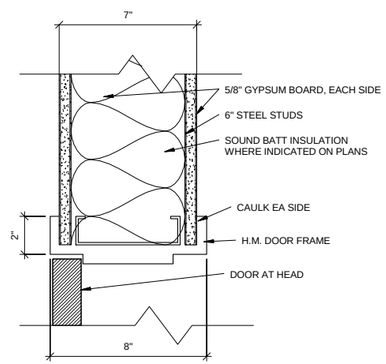

6 CONNECTION DETAIL 6
NOT TO SCALE

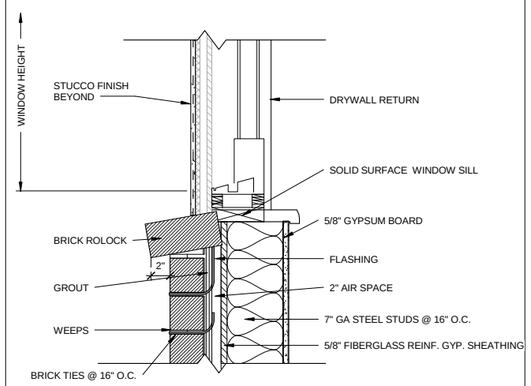

12 CONNECTION DETAIL 7
NOT TO SCALE

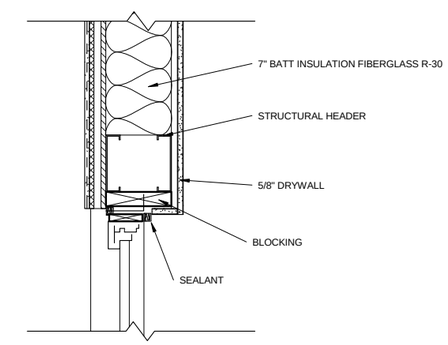

8 CONNECTION DETAIL 8
NOT TO SCALE

DETAIL BLOCK NOT USED

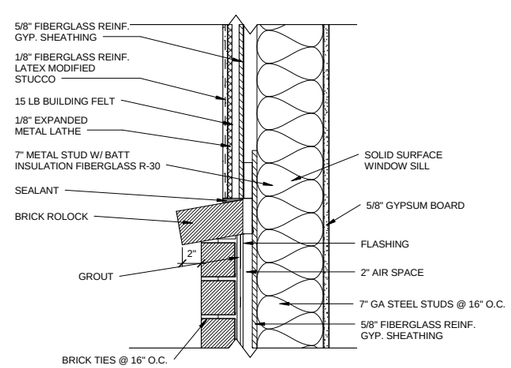

10 CONNECTION DETAIL 10
NOT TO SCALE

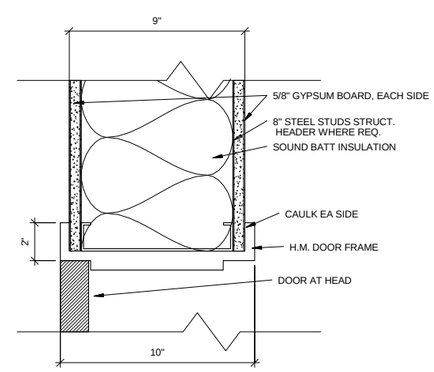

11 CONNECTION DETAIL 11
NOT TO SCALE

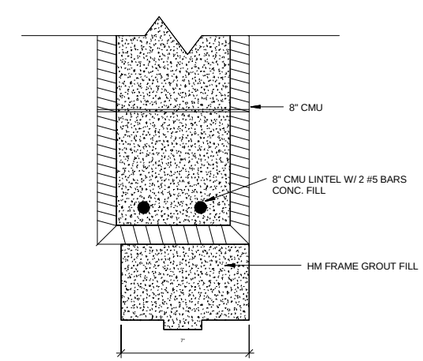

9 CONNECTION DETAIL 12
NOT TO SCALE

US Army Corps of Engineers ®
HUNTSVILLE CENTER

SYMBOL	DESCRIPTION	DATE	BY

DATE: JUNE 2014
SOLICITATION NO.: N/A
DESIGN BY: NEES
CKD BY:
DRAWN BY: ES
CONTRACT NO.: N/A
SIMT BY:
PLOT DATE: 6/23/2014 10:45:15 AM
CATEGORY CODE:
PLOT SCALE: As indicated
SIZE: D 22" X 34"
FILE NAME:

U.S. ARMY CORPS OF ENGINEERS
ENGINEERING AND SUPPORT CENTER
4820 UNIVERSITY SQ.
HUNTSVILLE, AL 35816

TRAINING SUPPORT CENTER (TSC) SMALL

MISCELLANEOUS DETAILS

PLATE REFERENCE NUMBER
A-501
SHEET 22 OF 55

DETAIL BLOCK NOT USED

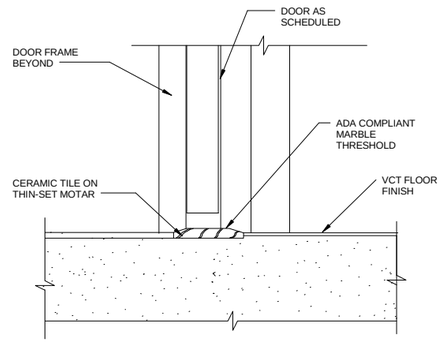

2 DETAIL - SILL 2
NOT TO SCALE

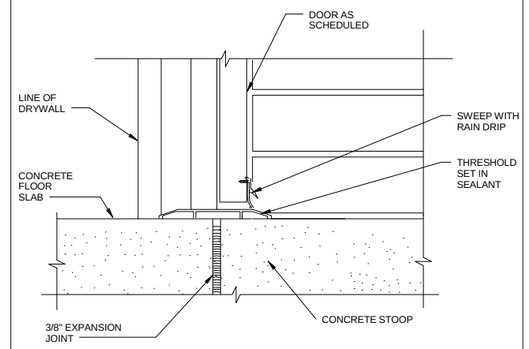

3 DETAIL - SILL 3
NOT TO SCALE

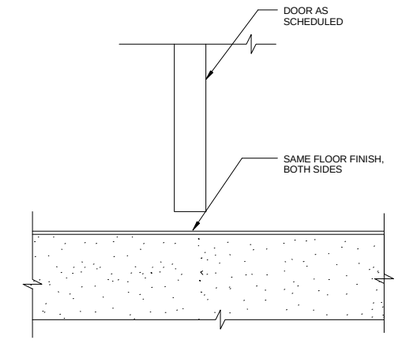

4 DETAIL - SILL 4
NOT TO SCALE

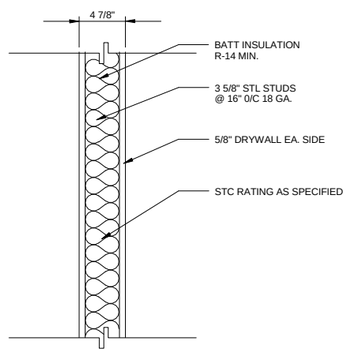

5 DETAIL - WALL TYPE W3
NOT TO SCALE

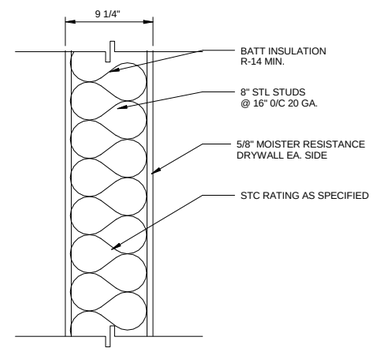

6 DETAIL - WALL TYPE W2
NOT TO SCALE

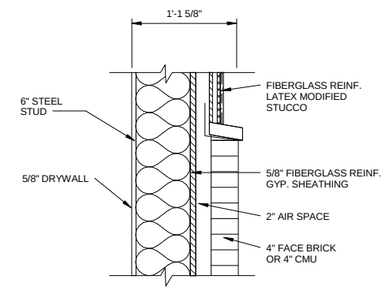

7 DETAIL - WALL TYPE W1
1" = 1'-0"

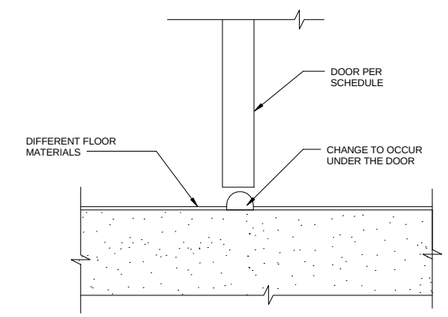

8 DETAIL - SILL 6
NOT TO SCALE

NOTE: THE CONTRACTOR HAS THE OPTION OF USING A MORTAR BED OR SLOPING THE SLAB AND APPLY TILE W/THIN-SET MORTAR.

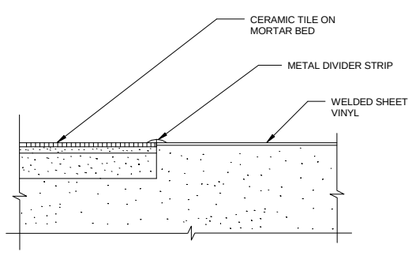

9 DETAIL - SILL 5
NOT TO SCALE

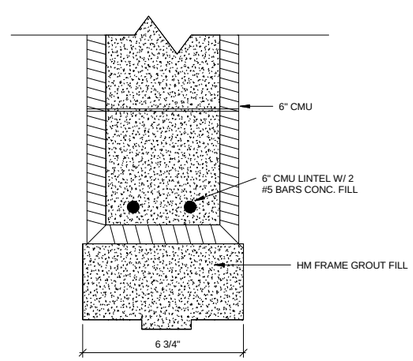

10 DETAIL - HEAD JAMB SIMILAR
NOT TO SCALE

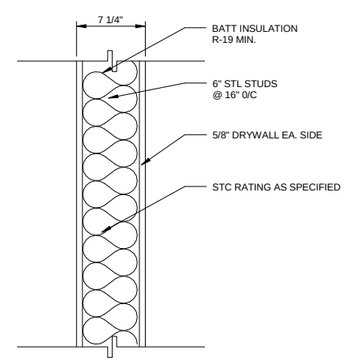

11 DETAIL - WALL TYPE W4
NOT TO SCALE

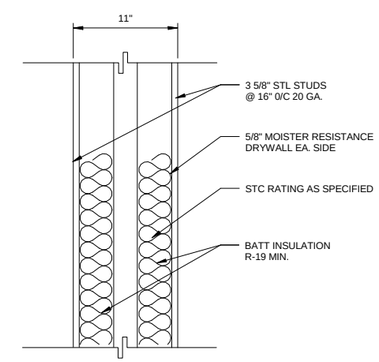

12 DETAIL - WALL TYPE W5
NOT TO SCALE

US Army Corps of Engineers ®
HUNTSVILLE CENTER

SYMBOL	DESCRIPTION	DATE	BY

DESIGN BY: NWS
DRAWN BY: ES
SBMT BY:
CKD BY:
PLOT SCALE: As indicated
PLOT DATE: 6/2/2014 10:46:15 AM
SIZE: D 22" x 34"
FILE NAME:
DATE: JUNE 2014
SOLICITATION NO.: N/A
CONTRACT NO.: N/A
CATEGORY CODE:

U.S. ARMY CORPS OF ENGINEERS
ENGINEERING AND SUPPORT CENTER
4820 UNIVERSITY SQ.
HUNTSVILLE, AL 35816

TRAINING SUPPORT CENTER (TSC) SMALL

MISCELLANEOUS DETAILS

PLATE REFERENCE NUMBER
A-502
SHEET 23 OF 55

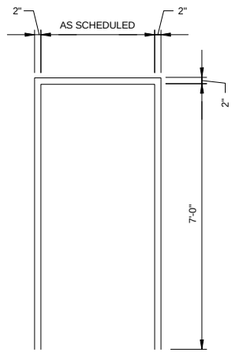

1 DETAIL - FRAME TYPE F1
NOT TO SCALE

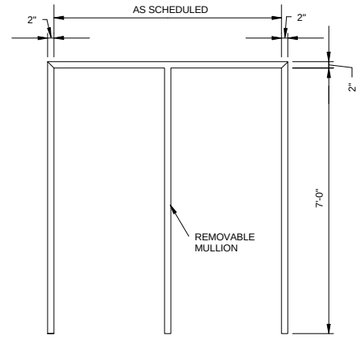

2 DETAIL - FRAME TYPE F2
NOT TO SCALE

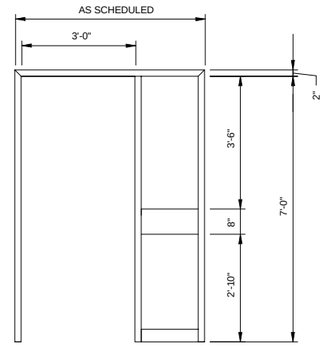

3 DETAIL - FRAME TYPE F3
NOT TO SCALE

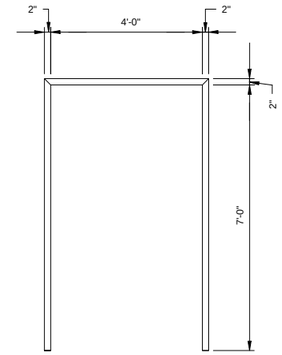

4 DETAIL - FRAME TYPE F4
NOT TO SCALE

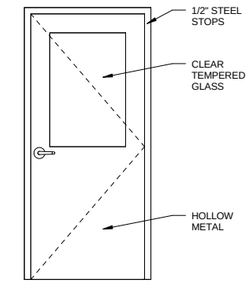

5 DETAIL - DOOR TYPE A
NOT TO SCALE

NOTE: ALL INTERIOR DOORS SHALL BE SOLID
WOOD-EXTERIOR DOORS SHALL BE INSULATED METAL.

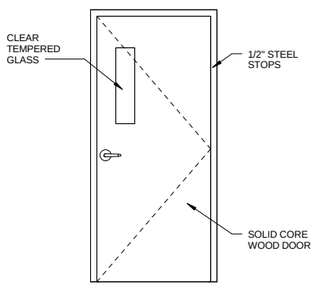

6 DETAIL - DOOR TYPE B
NOT TO SCALE

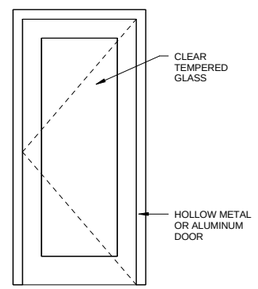

7 DETAIL - DOOR TYPE C
NOT TO SCALE

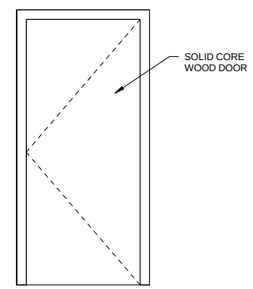

8 DETAIL - DOOR TYPE D
NOT TO SCALE

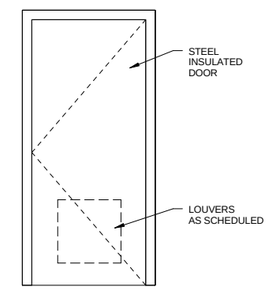

9 DETAIL - DOOR TYPE E
NOT TO SCALE

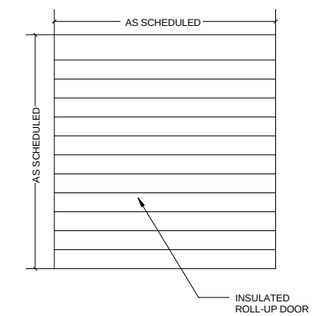

10 DETAIL - ROLL-UP DOOR
NOT TO SCALE

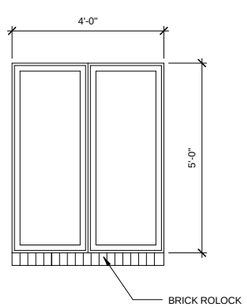

11 DETAIL - WINDOW TYPE A
NOT TO SCALE

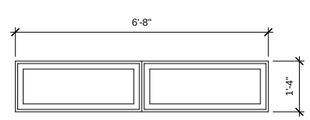

12 DETAIL - WINDOW TYPE B
NOT TO SCALE

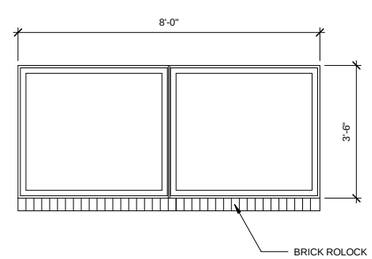

13 DETAIL - WINDOW TYPE C
NOT TO SCALE

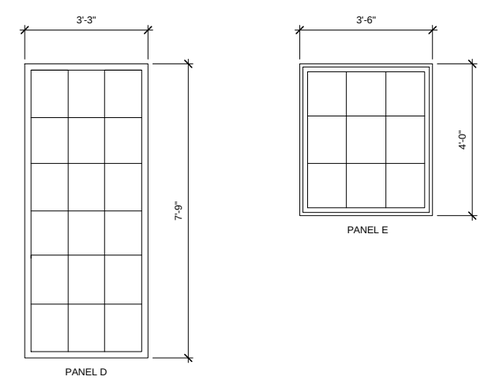

14 TRANSLUCENT PANELS D & E
NOT TO SCALE

2 1 0 2 4
SCALE: 1/2"=1'-0"

US Army Corps of Engineers ®
HUNTSVILLE CENTER

SYMBOL	DESCRIPTION	DATE	BY

DESIGN BY: NAS
DRAWN BY: ES
SBMT BY:
CKD BY:
PLOT DATE: 6/3/2014
PLOT SCALE: As indicated
SIZE: D 22" x 34"
FILE NAME:
DATE: JUNE 2014
SOLICITATION NO.: N/A
CONTRACT NO.: N/A
CATEGORY CODE:

U.S. ARMY CORPS OF ENGINEERS
ENGINEERING AND SUPPORT CENTER
4820 UNIVERSITY SQ.
HUNTSVILLE, AL 35816

TRAINING SUPPORT CENTER (TSC) SMALL

DOOR AND WINDOW DETAILS

PLATE REFERENCE NUMBER
A-503
SHEET 24 OF 55

DOOR SCHEDULE

DOOR NUMBER	TYPE	DOOR MATERIAL	WIDTH	HEIGHT	FRAME TYPE	FRAME MATERIAL
101	B	HOLLOW METAL/GLASS	3'-0"	7'-0"	F1	HOLLOW METAL
102	D	WOOD	3'-0"	7'-0"	F1	HOLLOW METAL
103	D	WOOD	3'-0"	7'-0"	F1	HOLLOW METAL
104	D	HOLLOW METAL	3'-0"	7'-0"	F1	HOLLOW METAL
105	D	HOLLOW METAL	3'-0"	7'-0"	F1	HOLLOW METAL
106	B	HOLLOW METAL/GLASS	3'-0"	7'-0"	F1	HOLLOW METAL
107	N/A	CASED OPENING	9'-7"	7'-0"	F1	HOLLOW METAL
107A	D	HOLLOW METAL	3'-0"	7'-0"	F1	HOLLOW METAL
107B	D	HOLLOW METAL	3'-0"	7'-0"	F1	HOLLOW METAL
107C	N/A	CASED OPENING	5'-0"	7'-0"	F1	HOLLOW METAL
107D	N/A	CASED OPENING	9'-2"	7'-0"	F1	HOLLOW METAL
107E	N/A	CASED OPENING	8'-4"	7'-0"	F1	HOLLOW METAL
109A	9	HOLLOW METAL	2'-10"	7'-0"	F1	HOLLOW METAL
109B	N/A	CASED OPENING	3'-6"	7'-2"	F1	HOLLOW METAL
110	C	HOLLOW METAL/GLASS	6'-0"	7'-0"	F2	HOLLOW METAL
111	C	HOLLOW METAL/GLASS	6'-0"	7'-0"	F2	HOLLOW METAL
112A	B	HOLLOW METAL/GLASS	3'-0"	7'-0"	F1	HOLLOW METAL
112B	D	HOLLOW METAL	3'-0"	7'-0"	F1	HOLLOW METAL
113A	B	HOLLOW METAL/GLASS	3'-0"	7'-0"	F1	HOLLOW METAL
113B	D	HOLLOW METAL	3'-0"	7'-0"	F1	HOLLOW METAL
113C	N/A	CASED OPENING	3'-6"	7'-2"	F1	HOLLOW METAL
113D	N/A	CASED OPENING	2'-0"	7'-0"	F1	HOLLOW METAL
113E	N/A	CASED OPENING	2'-0"	7'-0"	F1	HOLLOW METAL
117	B	HOLLOW METAL/GLASS	3'-0"	7'-0"	F1	HOLLOW METAL
118	B	HOLLOW METAL/GLASS	3'-0"	7'-0"	F1	HOLLOW METAL
119	D	HOLLOW METAL	3'-0"	7'-0"	F1	HOLLOW METAL
120B	F	ROLL-UP DOOR	11'-6"	16'-0"	N/A	N/A
120C	A	HOLLOW METAL	3'-0"	7'-0"	F1	HOLLOW METAL
121A	C	HOLLOW METAL/GLASS	6'-0"	7'-0"	F2	HOLLOW METAL
121B	N/A	CASED OPENING	3'-6"	7'-0"	F1	HOLLOW METAL
122	C	HOLLOW METAL/GLASS	6'-0"	7'-0"	F2	HOLLOW METAL
125	D	HOLLOW METAL	3'-0"	7'-0"	F1	HOLLOW METAL
126	N/A	CASED OPENING	3'-6"	7'-0"	F1	HOLLOW METAL

GENERAL DOOR, FRAME, AND WINDOW NOTES

1. ALL NEW WINDOWS REQUIRE THERMAL BROKEN FRAMES.

2. DUAL PANE GLASS WITH A LOW E-COATING AND LAMINATE SHALL CONFORM TO MIN STANDARDS FOR ANTI-TERRORISM AND FORCE PROTECTION.

3. ALL WINDOWS SHALL BE CAULKED ON INTERIOR WITH A LATEX CAULK AND ON THE EXTERIOR WITH A URETHANE CAULK TO MATCH THE WINDOW COLOR.

4. ALL EXTERIOR DOORS SHALL BE WEATHER STRIPPED AND SEALED, INCLUDING FOYER AND VESTIBULE DOORS.

5. ALL WINDOWS SHALL BE CAULKED SEALED AGAINST AIR AND MOISTURE PENETRATION.

WINDOW SCHEDULE

TYPE	WIDTH	HEIGHT	FRAME MATERIAL	U-VALUE	SHGC
A	2'-0"	5'-0"	HOLLOW MTL., ALUM. OPT.	MAX U-.55	.25
B	3'-4"	1'-4"	HOLLOW MTL., ALUM. OPT.	MAX U-.55	.25
C	4'-0"	3'-6"	HOLLOW MTL., ALUM. OPT.	MAX U-.55	.25
D	3'-6"	8'-0"	HOLLOW MTL., ALUM. OPT.	MAX U-.55	.25
E	3'-6"	3'-6"	HOLLOW MTL., ALUM. OPT.	MAX U-.55	.25
F	5'-0"	5'-8"	HOLLOW MTL., ALUM. OPT.	MAX U-.55	.25
G	6'-0"	3'-6"	WOOD	MAX U-.55	.25
H	5'-0"	3'-6"	WOOD	MAX U-.55	.25
I	7'-0"	3'-6"	WOOD	MAX U-.55	.25
J	1'-4"	7'-3"	HOLLOW MTL., ALUM. OPT.	MAX U-.55	.25
K	8'-11"	1'-8"	HOLLOW MTL., ALUM. OPT.	MAX U-.55	.25
L	6'-6"	1'-8"	HOLLOW MTL., ALUM. OPT.	MAX U-.55	.25

* PROPOSED WWR FOR TSC SMALLL IS 17%

WINDOW TO WALL RATIO (WWR)

CRITERIA	BENCHMARK
ASHRAE 189.1 - 2009	40% OR LESS
ASHRAE 90.1 - 2007	40% OR LESS

TYPICAL DOOR DETAIL NOTES

1. ALL EXTERIOR DOOR W/ 6" HEAD & JAMB DETAILS (DETAILS 1 & 2 SHEET A-501).
2. ALL INTERIOR WALLS W/ 3-5/8" HEAD & JAMB DETAILS (DETAILS 3 &4 SHEET A-501).
3. ALL INTERIOR WALLS 6" HEAD & JAMB DETAILS (DETAIL 6 SHEET A-501).
4. ALL INTERIOR WALLS 8" HEAD & JAMB DETAILS (DETAIL 11 SHEET A-501).

US Army Corps of Engineers ®
HUNTSVILLE CENTER

SYMBOL	DESCRIPTION	DATE	BY

DATE: JUNE 2014
SOLICITATION NO.: N/A
CONTRACT NO.: N/A
CATEGORY CODE:
DESIGN BY: NWS
DRAWN BY: ES
CKD BY:
SBMT BY:
PLOT DATE: 6/23/2014 10:45:16 AM
PLOT SCALE: 1/4" = 1'-0"
SIZE: D 22" X 34"
FILE NAME:

U.S. ARMY CORPS OF ENGINEERS
ENGINEERING AND SUPPORT CENTER
4820 UNIVERSITY SQ.
HUNTSVILLE, AL 35816

TRAINING SUPPORT CENTER (TSC) SMALL

WALL, DOOR AND WINDOW SCHEDULES

PLATE REFERENCE NUMBER
A-601

SHEET 25 OF 55

FINISH SCHEDULE

ROOM NO	ROOM NAME	CEILING HEIGHT	NORTH FINISH		EAST FINISH		SOUTH FINISH		WEST FINISH		CEILING FINISH	FLOOR FINISH
			WALL	BASE	WALL	BASE	WALL	BASE	WALL	BASE		
101	BREAK ROOM	9'-0"	DRYWALL	RUBBER	DRYWALL	RUBBER	DRYWALL	RUBBER	DRYWALL	RUBBER	ACOUSTICAL CEILING	VCT
102	STORAGE	9'-0"	DRYWALL	RUBBER	DRYWALL	RUBBER	DRYWALL	RUBBER	DRYWALL	RUBBER	ACOUSTICAL CEILING	VCT
103	TELECOM.	9'-0"	DRYWALL	RUBBER	DRYWALL	RUBBER	DRYWALL	RUBBER	DRYWALL	RUBBER	ACOUSTICAL CEILING	VCT
104	WOMEN	11'-0"	CERAMIC TILE/DRYWALL	CERAMIC TILE	CERAMIC TILE/DRYWALL	CERAMIC TILE	CERAMIC TILE/DRYWALL	CERAMIC TILE	CERAMIC TILE/DRYWALL	CERAMIC TILE	ACOUSTICAL CEILING	CERAMIC TILE
105	MEN	11'-0"	CERAMIC TILE/DRYWALL	CERAMIC TILE	CERAMIC TILE/DRYWALL	CERAMIC TILE	CERAMIC TILE/DRYWALL	CERAMIC TILE	CERAMIC TILE/DRYWALL	CERAMIC TILE	ACOUSTICAL CEILING	CERAMIC TILE
106	OFFICE	9'-0"	DRYWALL	RUBBER	DRYWALL	RUBBER	DRYWALL	RUBBER	DRYWALL	RUBBER	ACOUSTICAL CEILING	CARPET
107	ADMINISTRATION	10'-0"	DRYWALL	RUBBER	DRYWALL	RUBBER	DRYWALL	RUBBER	DRYWALL	RUBBER	ACOUSTICAL CEILING	CARPET
108	LOBBY	10'-0"	DRYWALL	RUBBER	DRYWALL	RUBBER	DRYWALL	RUBBER	DRYWALL	RUBBER	ACOUSTICAL CEILING	VCT
109	CORRIDOR	10'-0"	DRYWALL	RUBBER	DRYWALL	RUBBER	DRYWALL	RUBBER	DRYWALL	RUBBER	ACOUSTICAL CEILING	VCT
110	VESTIBULE	9'-0"	DRYWALL	QUARRY TILE	DRYWALL	QUARRY TILE	DRYWALL	QUARRY TILE	DRYWALL	QUARRY TILE	ACOUSTICAL CEILING	QUARRY TILE
111	VESTIBULE	9'-0"	DRYWALL	QUARRY TILE	DRYWALL	QUARRY TILE	DRYWALL	QUARRY TILE	DRYWALL	QUARRY TILE	ACOUSTICAL CEILING	QUARRY TILE
112	TRAINING ROOM	11'-0"	DRYWALL	RUBBER	DRYWALL	RUBBER	DRYWALL	RUBBER	DRYWALL	RUBBER	ACOUSTICAL CEILING	VCT
113	TRAINING ROOM	11'-0"	DRYWALL	RUBBER	DRYWALL	RUBBER	DRYWALL	RUBBER	DRYWALL	RUBBER	ACOUSTICAL CEILING	CARPET
114	MECH. RM.	10'-0"	CMU	RUBBER	CMU	RUBBER	CMU	RUBBER	CMU	RUBBER	DRYWALL	SEALED CONCRETE
115	PUMP RM.	11'-0"	CMU	RUBBER	CMU	RUBBER	CMU	RUBBER	CMU	RUBBER	EXPOSED	SEALED CONCRETE
116	ELECT. RM.	10'-0"	CMU	RUBBER	CMU	RUBBER	CMU	RUBBER	CMU	RUBBER	DRYWALL	SEALED CONCRETE
117	SECURE STOR.	8'-0"	CMU	RUBBER	CMU	RUBBER	CMU	RUBBER	CMU	RUBBER	CONCRETE	SEALED CONCRETE
118	OFFICE	9'-0"	CMU	RUBBER	CMU	RUBBER	CMU	RUBBER	CMU	RUBBER	ACOUSTICAL CEILING	VCT
119	TOILET	9'-0"	CERAMIC TILE/DRYWALL	CERAMIC TILE	CERAMIC TILE/DRYWALL	CERAMIC TILE	CERAMIC TILE/DRYWALL	CERAMIC TILE	CERAMIC TILE/DRYWALL	CERAMIC TILE	ACOUSTICAL CEILING	CERAMIC TILE
120	WAREHOUSE	24'-0"	CMU	STEEL ANGLE	CMU	STEEL ANGLE	CMU	STEEL ANGLE	CMU	STEEL ANGLE	EXPOSED	SEALED CONCRETE
124	WAITING	8'-0"	DRYWALL	RUBBER	DRYWALL	RUBBER	DRYWALL	RUBBER	DRYWALL	RUBBER	ACOUSTICAL CEILING	CARPET
125	JAN	8'-0"	DRYWALL	RUBBER	DRYWALL	RUBBER	DRYWALL	RUBBER	DRYWALL	RUBBER	ACOUSTICAL CEILING	VCT
126	SHOWER	8'-0"	CERAMIC TILE/DRYWALL	CERAMIC TILE	CERAMIC TILE/DRYWALL	CERAMIC TILE	CERAMIC TILE/DRYWALL	CERAMIC TILE	CERAMIC TILE/DRYWALL	CERAMIC TILE	FIBERGLASS	CERAMIC TILE
126	SHOWER	8'-0"	CERAMIC TILE/DRYWALL	CERAMIC TILE	CERAMIC TILE/DRYWALL	CERAMIC TILE	CERAMIC TILE/DRYWALL	CERAMIC TILE	CERAMIC TILE/DRYWALL	CERAMIC TILE	FIBERGLASS	CERAMIC TILE

US Army Corps of Engineers ®
HUNTSVILLE CENTER

SYMBOL	DESCRIPTION	DATE	BY

DESIGN BY: N/A
DRAWN BY: ES
CKD BY:
SBMT BY:
DATE: 2014
SOLICITATION NO.: N/A
CONTRACT NO.: N/A
CATEGORY CODE:
PLOT DATE: 6/3/2014 10:45:17 AM
PLOT SCALE:
FILE NAME:
SIZE: D 22"X 34"

U.S. ARMY CORPS OF ENGINEERS
ENGINEERING AND SUPPORT CENTER

4820 UNIVERSITY SQ.
HUNTSVILLE, AL 35816

TRAINING SUPPORT CENTER (TSC) SMALL

FINISH SCHEDULE

PLATE REFERENCE NUMBER
A-602

SHEET 26 OF 55

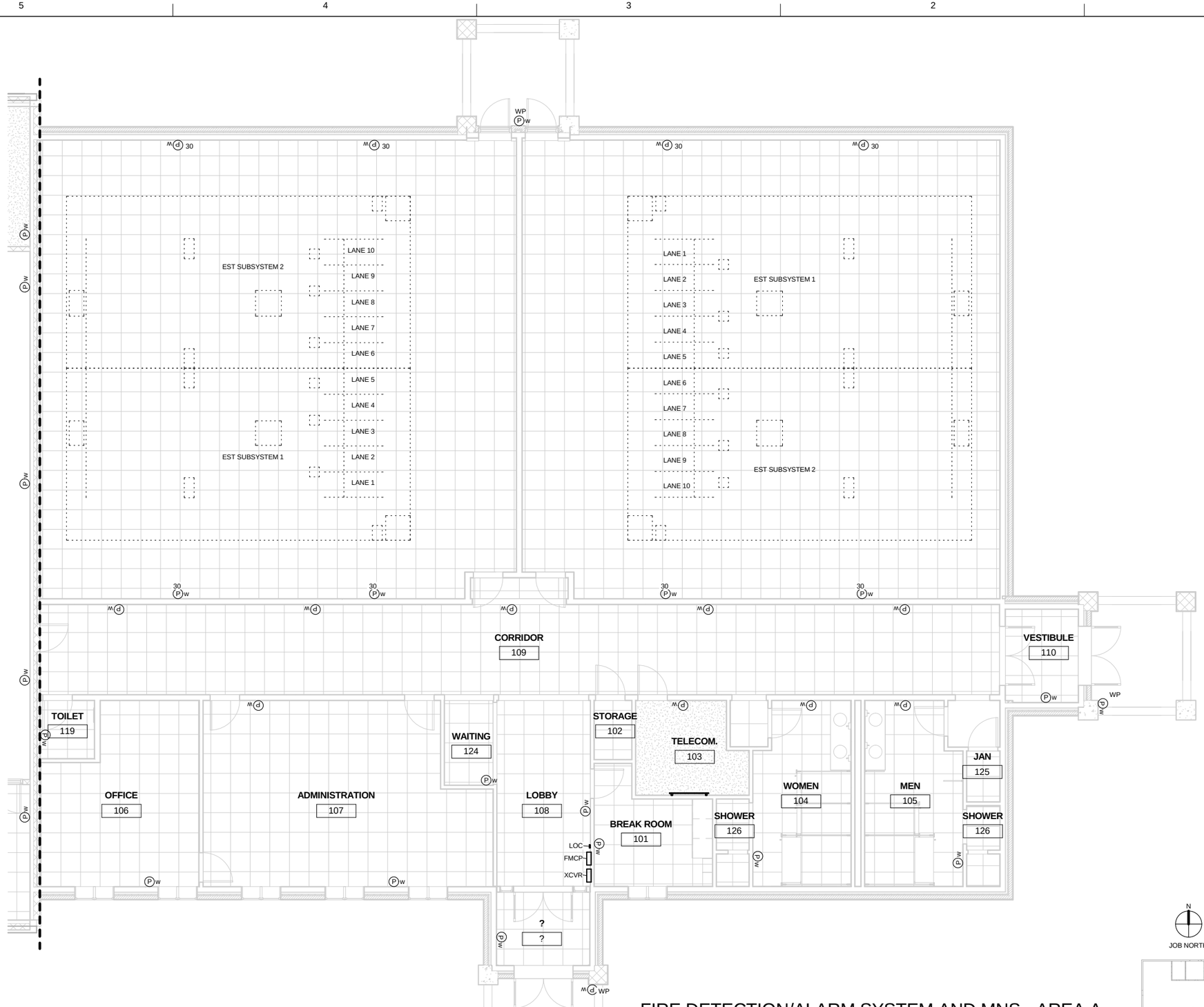

FIRE DETECTION/ALARM SYSTEM AND MNS - AREA A

SCALE: 3/16" = 1'-0"

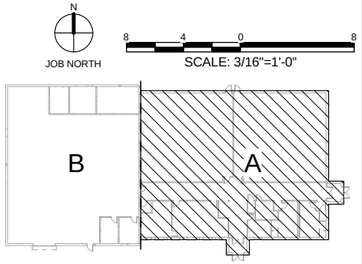

8 4 0 8

SCALE: 3/16"=1'-0"

US Army Corps of Engineers ®
HUNTSVILLE CENTER

SYMBOL	DESCRIPTION	DATE	BY

DESIGN BY: EEJ
DRAWN BY: EJJ
SBMT BY:
CKD BY:
PLOT DATE: 6/2/2014 11:51:44 AM
PLOT SCALE: As indicated
SIZE: 36" x 24"
FILE NAME:
DATE: JUNE 2014
SOLICITATION NO.: N/A
CONTRACT NO.: N/A
CATEGORY CODE: 95% DESIGN PACKAGE

U.S. ARMY CORPS OF ENGINEERS
ENGINEERING AND SUPPORT CENTER, HUNTSVILLE
4820 UNIVERSITY SQ.
HUNTSVILLE, AL 35816

TRAINING SUPPORT CENTER (TSC)
STANDARD DESIGN
SMALL

FIRE ALARM AND MNS FLOOR PLAN - AREA A

PLATE REFERENCE NUMBER
FA101

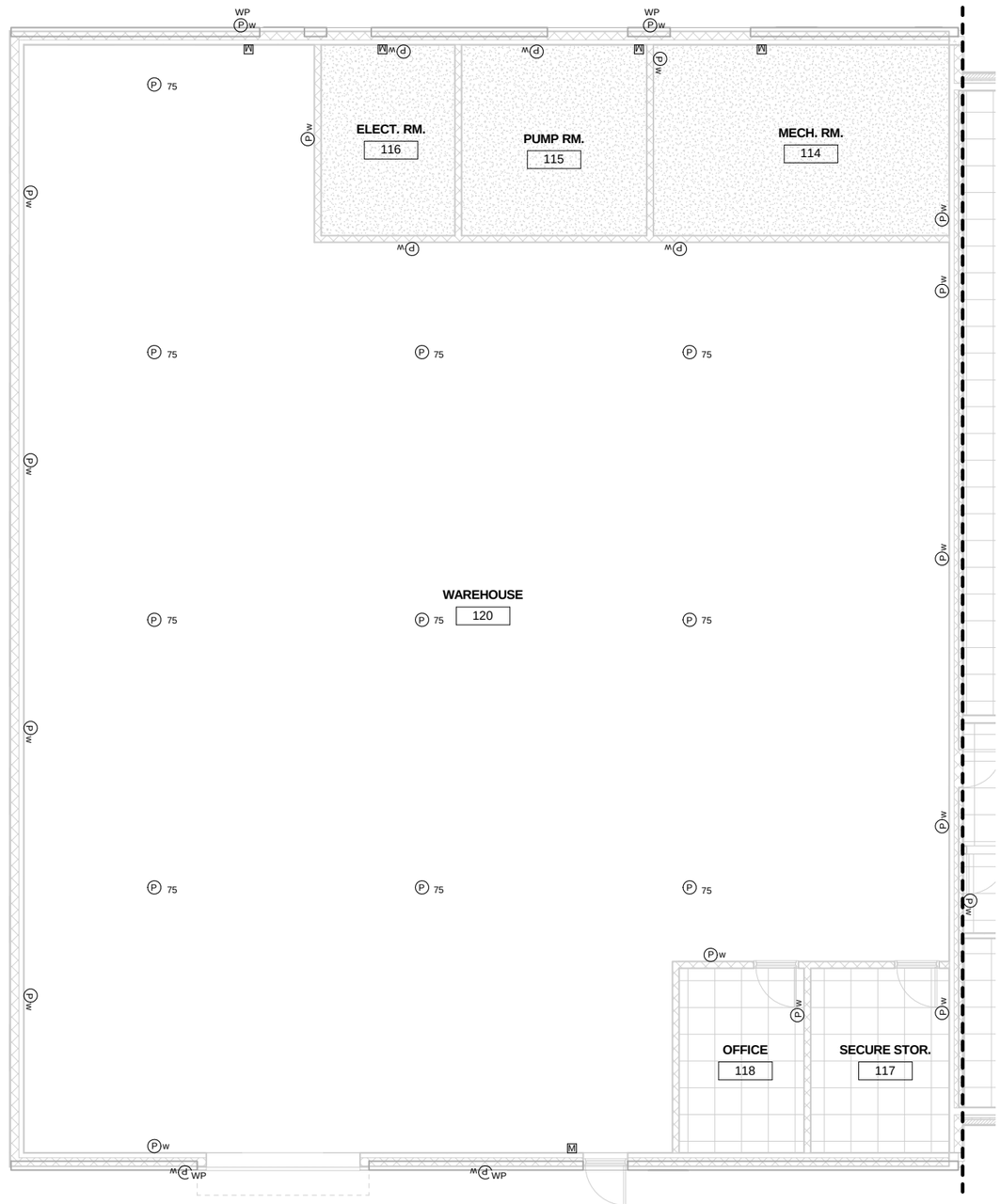

FIRE DETECTION/ALARM SYSTEM AND MNS - AREA B

SCALE: 3/16" = 1'-0"

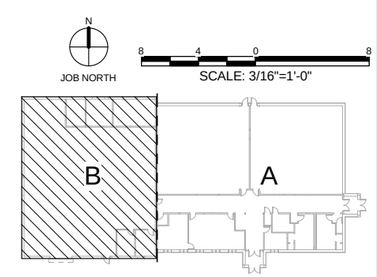

US Army Corps of Engineers ®
HUNTSVILLE CENTER

SYMBOL	DESCRIPTION	DATE	BY

DESIGN BY: EBA
DRAWN BY: EJJ
SBMT BY:
CKD BY:
PLOT SCALE: As indicated
PLOT DATE: 6/2/2014 1:15:47 AM
FILE NAME:
DATE: JUNE 2014
SOLICITATION NO.: N/A
CONTRACT NO.: N/A
CATEGORY CODE: 163% DESIGN PACKAGE
SIZE: 36" X 24" 22" X 34"

U.S. ARMY CORPS OF ENGINEERS
ENGINEERING AND SUPPORT CENTER, HUNTSVILLE
4820 UNIVERSITY SQ.
HUNTSVILLE, AL 35816

TRAINING SUPPORT CENTER (TSC)
STANDARD DESIGN
SMALL

FIRE ALARM AND MNS FLOOR PLAN - AREA B

PLATE REFERENCE NUMBER
FA102

FIRE ALARM/MASS NOTIFICATION SYSTEMS OPERATIONS MATRIX

	DISPLAY MESSACE ON FACP	DISPLAY MESSAGE ON FIRE ALARM ANNUNCIATOR	RECORD EVENT IN THE HISTORY LOG		TRANSMIT ALARM TO CENTRAL FIRE ALARM SYSTEM	TRANSMIT SUPERVISORY SIGNAL TO CENTRAL FIRE ALARM SYSTEM	TRANSMIT TROUBLE SIGNAL TO CENTRAL FIRE ALARM SYSTEM		ACTIVATE CLEAR FIRE ALARM NOTIFICATION STROBES	ACTIVATE AMBER MASS NOTIFICATION STROBES		BROADCAST FIRE ALARM MESSAGE	BROADCAST FIRE ALARM TROUBLE SIGNAL	BROADCAST RECORDED OR LIVE MASS NOTIFICATION MESSAGE		SHUT DOWN PROTECTED AIR-HANDLING UNIT(S)		ELEVATOR RECALL PRIMARY FLOOR (FIRST FLOOR) (N/A)	ELEVATOR RECALL SECONDARY FLOOR (SECOND FLOOR) (N/A)	CONTINUOUSLY ILLUMINATE FIREFIGHTER SERVICE LIGHT IN ELEVATOR CAB (N/A)	FLASH FIREFIGHTER SERVICE INDICATOR IN ELEVATOR CAB (N/A)	SHUNT-TRIP DISCONNECT OF ELEVATOR EQUIPMENT (N/A)				
MANUAL FIRE ALARM PULL STATION	●	●	●		●				●			●															
SPRINKLER WATER FLOW SWITCH - ELEVATOR EQUIP ROOM (N/A)																											
SPRINKLER WATER FLOW SWITCH - ELEVATOR HOISTWAY (N/A)																											
SPRINKLER WATER FLOW SWITCH - OTHER	●	●	●		●				●			●															
SPRINKLER VALVE TAMPER SWITCH AND PIV	●	●	●			●																					
SMOKE DETECTOR - ELEVATOR EQUIPMENT ROOM (N/A)																											
SMOKE DETECTOR - ELEVATOR HOISTWAY (N/A)																											
SMOKE DETECTOR - FIRST FLOOR ELEVATOR LOBBY (N/A)																											
SMOKE DETECTOR - SECOND FLOOR ELEVATOR LOBBY (N/A)																											
SMOKE DETECTOR - FA/MNS CONTROL PANEL ROOM	●	●	●		●				●			●															
DUCT SMOKE DETECTOR	●	●	●		●				●			●				●											
HEAT DETECTOR - ELEVATOR EQUIPMENT ROOM (N/A)																											
HEAT DETECTOR - ELEVATOR SHAFT (N/A)																											
FACP TROUBLE	●	●	●				●						●														
FACP SILENCE SWITCH	●	●	●																								
MNS ACTIVATION						●				●				●													

NOTES, FIRE ALARM & MASS NOTIFICATION SYSTEM SEQUENCE OF OPERATION:

GENERAL:
1. N/A = NOT APPLICABLE
2. WHEN FIRE PUMP IS REQUIRED TO BE PROVIDED: FOR FIRE PUMP OR MOTOR RUNNING DISPLAY MESSAGE ON FIRE ALARM ANNUNCIATOR, RECORD EVENT IN THE HISTORY LOG, AND TRANSMIT UNIQUE ALARM TO CENTRAL FIRE ALARM SYSTEM. FOR EACH UNIQUE SUPERVISORY SIGNALS DESCRIBED BY NFPA 20 (LOSS OF PHASE, PHASE REVERSAL, CONTROLLER CONNECTED TO ALTERNATE SOURCE) DISPLAY MESSACE ON FACP, DISPLAY MESSAGE ON FIRE ALARM ANNUNCIATOR, RECORD EVENT IN THE HISTORY LOG, AND TRANSMIT UNIQUE SUPERVISORY SIGNAL TO CENTRAL FIRE ALARM SYSTEM.

SPECIFIC NOTES:

N/A

US Army Corps of Engineers ®
HUNTSVILLE CENTER

SYMBOL	DESCRIPTION	DATE	BY

DESIGN BY: EJJ
DRAWN BY: EJJ
SBMT BY:
CKD BY:
DATE: JUNE 2014
SOLICITATION NO.: N/A
PLOT DATE: 6/2/2014 11:51:51 AM
CONTRACT NO.: N/A
PLOT SCALE: 12" = 1'-0"
SIZE: 30" 22 X 34
FILE NAME:
CATEGORY CODE: 0510 DESIGN PACKAGE

U.S. ARMY CORPS OF ENGINEERS
ENGINEERING AND SUPPORT CENTER, HUNTSVILLE
4820 UNIVERSITY SQ.
HUNTSVILLE, AL 35816

TRAINING SUPPORT CENTER (TSC) STANDARD DESIGN
SMALL

FA/MNS SYSTEMS OPERATIONS MATRIX

PLATE REFERENCE NUMBER
FA602

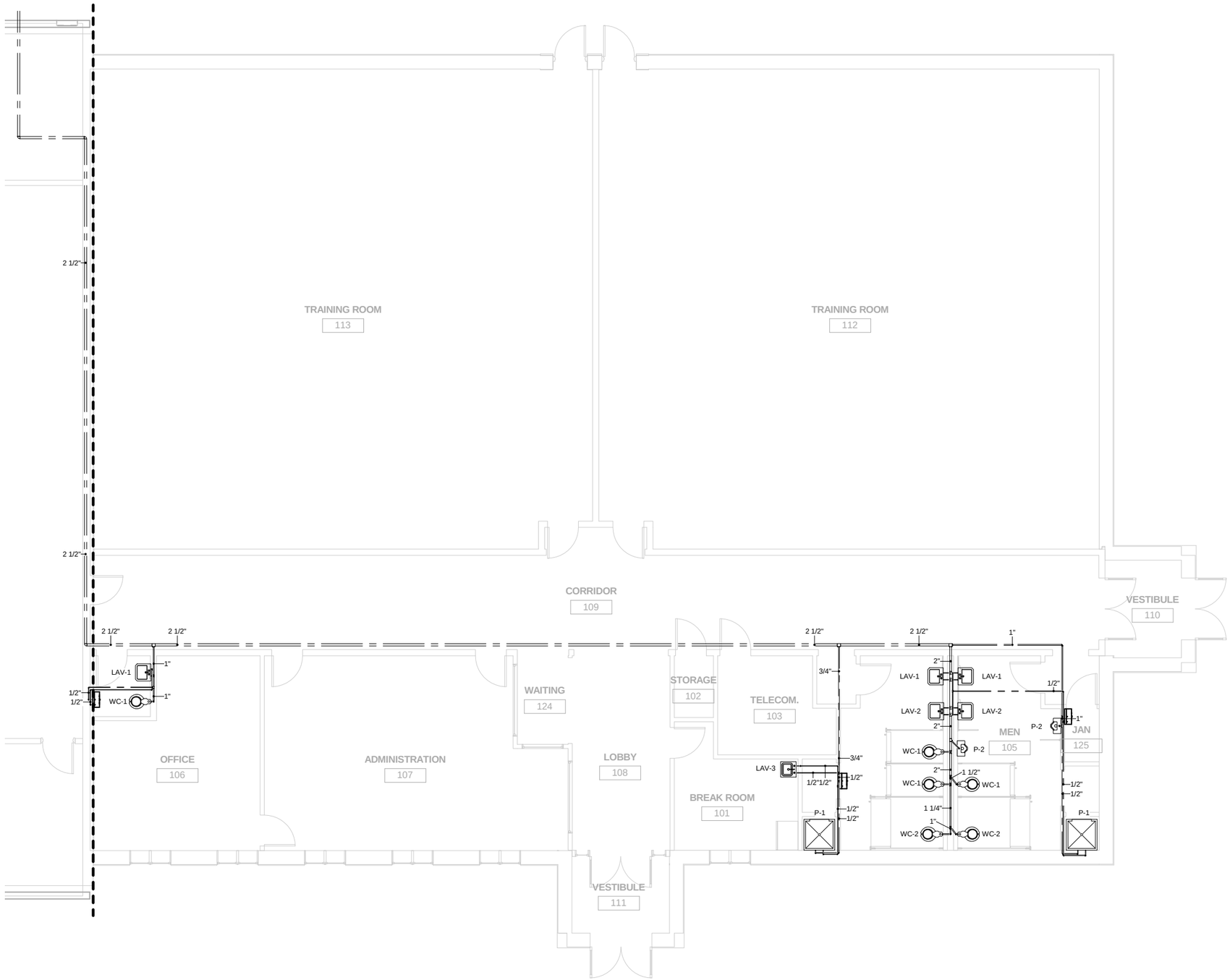

POTABLE HOT AND COLD WATER - AREA A

SCALE: 3/16" = 1'-0"

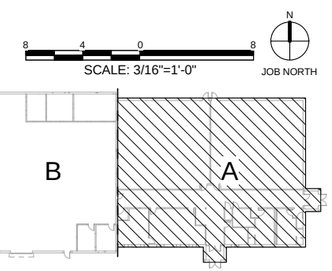

US Army Corps of Engineers ®
HUNTSVILLE CENTER

SYMBOL	DESCRIPTION	DATE	BY

DESIGN BY: JES
DATE: JUNE 2014
DRAWN BY: JCS
CKD BY: SW
SOLICITATION NO.: N/A
SBMT BY:
PLOT DATE: 6/2/2014 11:47:18 AM
CONTRACT NO.: N/A
PLOT SCALE: As indicated
CATEGORY CODE: 65% DESIGN PACKAGE
SIZE: 22" x 34"
FILE NAME:

U.S. ARMY CORPS OF ENGINEERS
ENGINEERING AND SUPPORT CENTER, HUNTSVILLE
4820 UNIVERSITY SQ.
HUNTSVILLE, AL 35816

TRAINING SUPPORT CENTER (TSC)
STANDARD DESIGN
SMALL

POTABLE HOT AND COLD WATER - AREA A

PLATE REFERENCE NUMBER
P-101

SHEET 30 OF 55

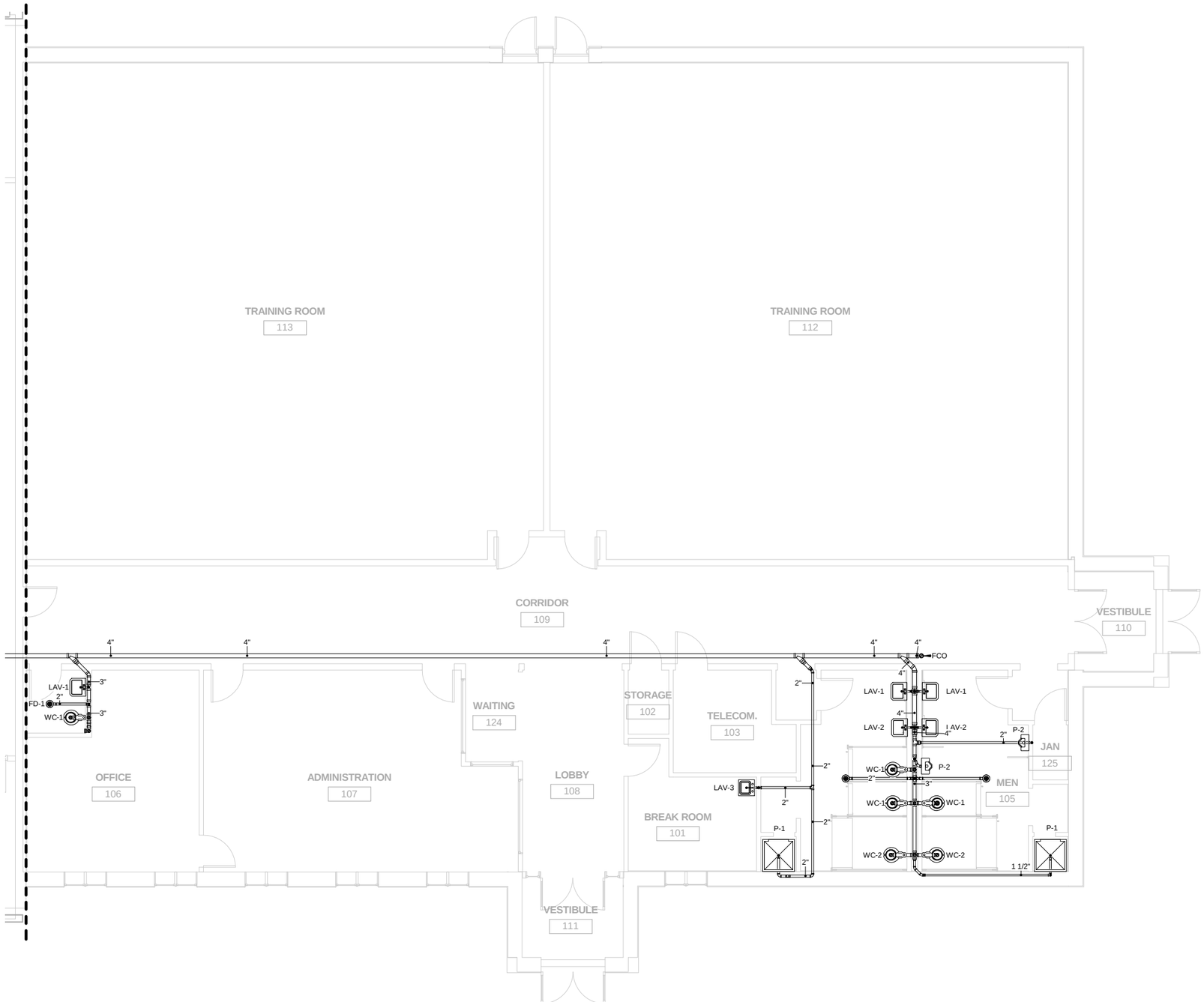

SANITARY WASTE AND VENT PIPING - AREA A

SCALE: 3/16" = 1'-0"

SCALE: 3/16"=1'-0"

JOB NORTH

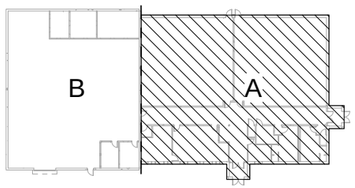

US Army Corps of Engineers ®
HUNTSVILLE CENTER

SYMBOL	DESCRIPTION	DATE	BY

DATE: JUNE 2014
SOLICITATION NO.: N/A
CONTRACT NO.: N/A
CATEGORY CODE: 635% DESIGN PACKAGE
DESIGN BY: JCS
DRAWN BY: JCS
CKD BY: SW
SBMT BY:
PLOT DATE: 6/3/2014 11:47:22 AM
PLOT SCALE: As indicated
SIZE: 22" X 34"
FILE NAME:

U.S. ARMY CORPS OF ENGINEERS
ENGINEERING AND SUPPORT CENTER, HUNTSVILLE
4820 UNIVERSITY SQ.
HUNTSVILLE, AL 35816

TRAINING SUPPORT CENTER (TSC)
STANDARD DESIGN
SMALL

SANITARY WASTE AND VENT PIPING - AREA A

PLATE REFERENCE NUMBER
P-102

SHEET 31 OF 55

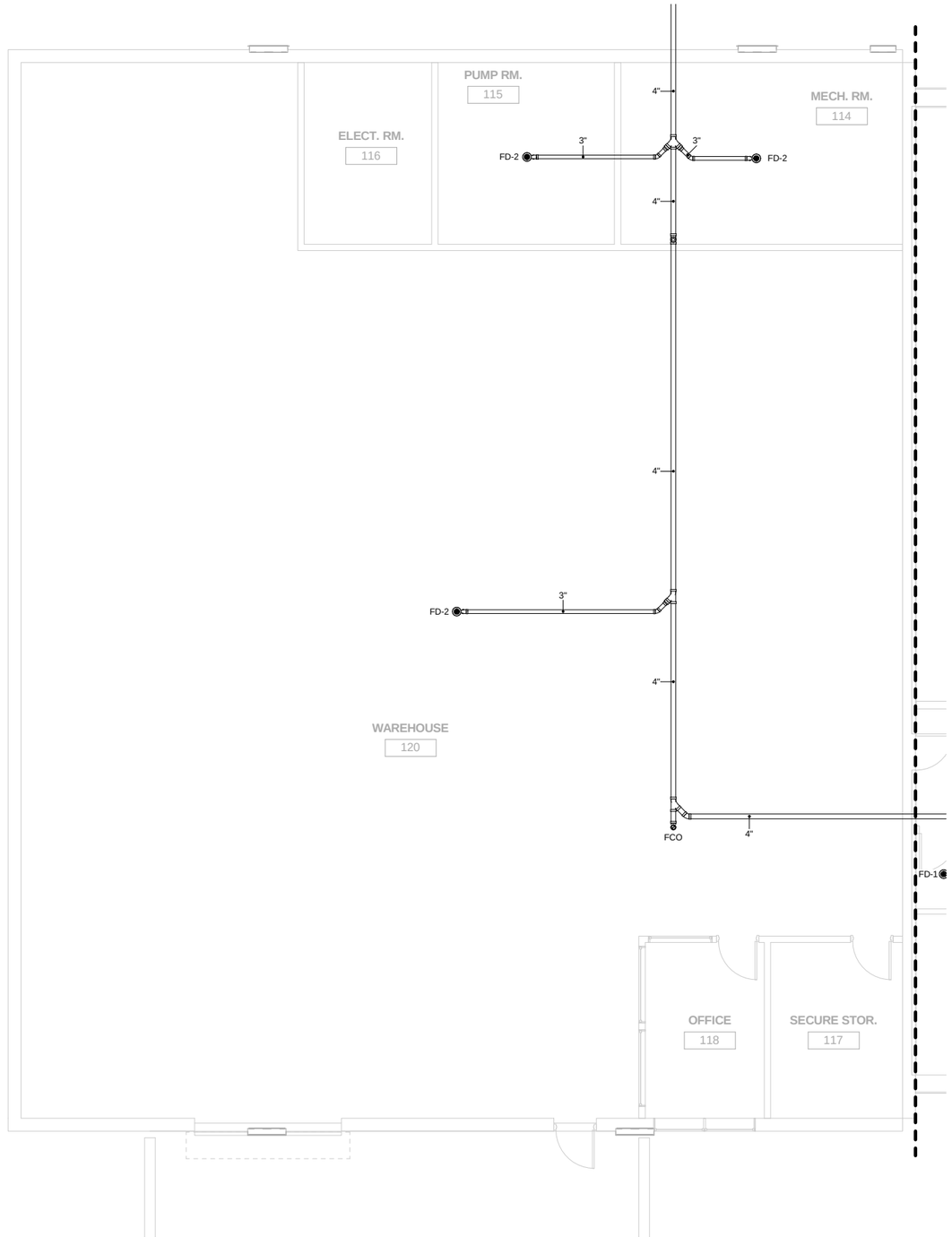

SANITARY WASTE AND VENT PIPING - AREA B

SCALE: 3/16" = 1'-0"

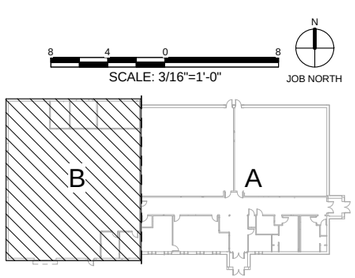

US Army Corps of Engineers ®
HUNTSVILLE CENTER

SYMBOL	DESCRIPTION	DATE	BY

DESIGN BY: JCS
DRAWN BY: JCS
SBMT BY:
DATE: JUNE 2014
SOL/CITATION NO.: N/A
CKD BY: SW
CONTRACT NO: N/A
PLOT DATE: 6/2/2014 1:14:7:24 AM
CATEGORY CODE: 65% DESIGN PACKAGE
PLOT SCALE: As indicated
SIZE: 22" x 34"
FILE NAME:

U.S. ARMY CORPS OF ENGINEERS
ENGINEERING AND SUPPORT CENTER, HUNTSVILLE
4820 UNIVERSITY SQ.
HUNTSVILLE, AL 35816

TRAINING SUPPORT CENTER (TSC)
STANDARD DESIGN
SMALL

SANITARY WASTE AND VENT PIPING - AREA B

PLATE REFERENCE NUMBER
P-103

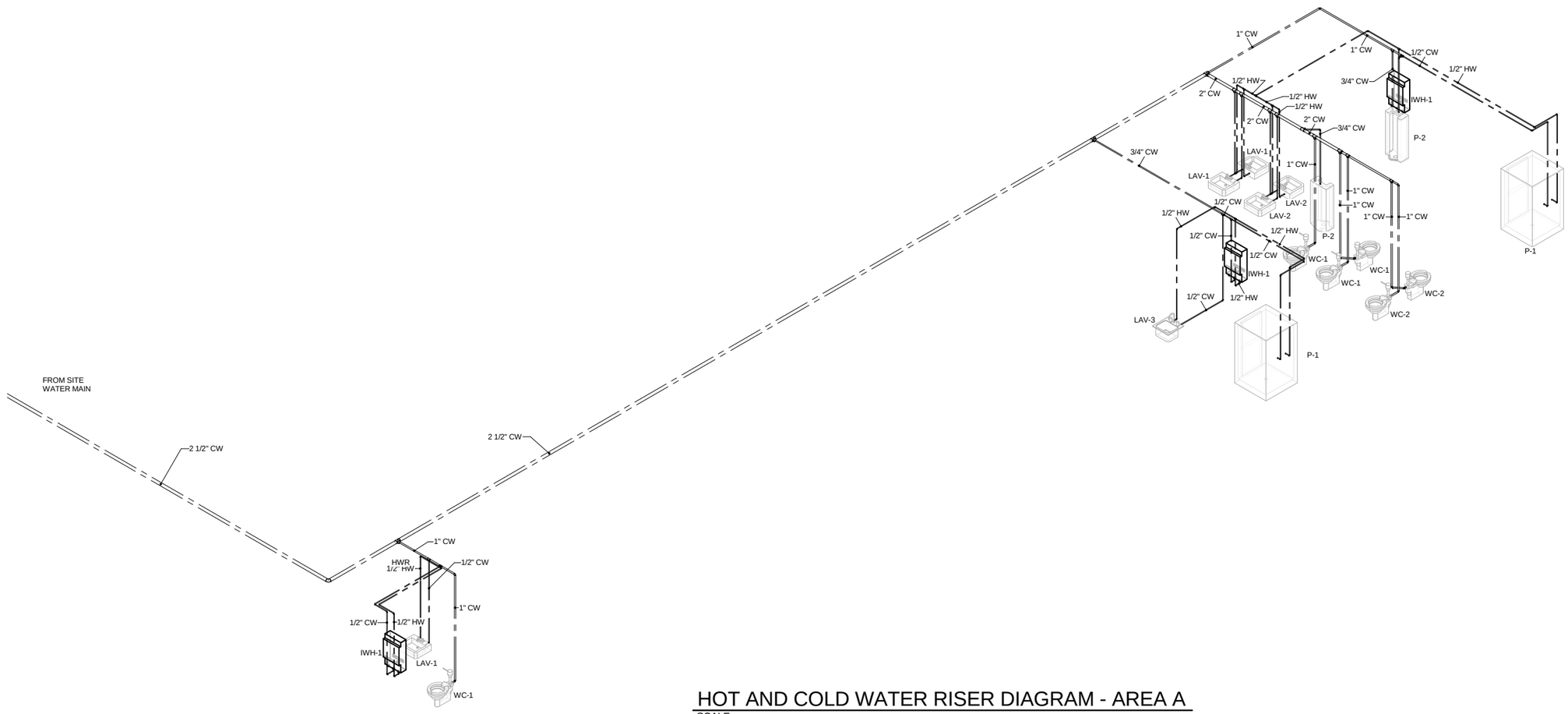

HOT AND COLD WATER RISER DIAGRAM - AREA A

SCALE:

US Army Corps of Engineers ®
HUNTSVILLE CENTER

SYMBOL	DESCRIPTION	DATE	BY

DESIGN BY: JCS
DRAWN BY: JCS
CKD BY: SW
DATE: 13 JUNE 2014
SOLICITATION NO.: N/A
SBMT BY:
PLOT DATE: 6/3/2014 11:47:26 AM
CONTRACT NO.: N/A
PLOT SCALE:
CATEGORY CODE: 65% DESIGN PACKAGE
SIZE: D 22" X 34"
FILE NAME:

U.S. ARMY CORPS OF ENGINEERS
ENGINEERING AND SUPPORT CENTER, HUNTSVILLE
4820 UNIVERSITY SQ.
HUNTSVILLE, AL 35816

TRAINING SUPPORT CENTER (TSC)
STANDARD DESIGN
SMALL

HOT AND COLD WATER RISER DIAGRAM - AREA A

PLATE REFERENCE NUMBER
P-201

SHEET 33 OF 55

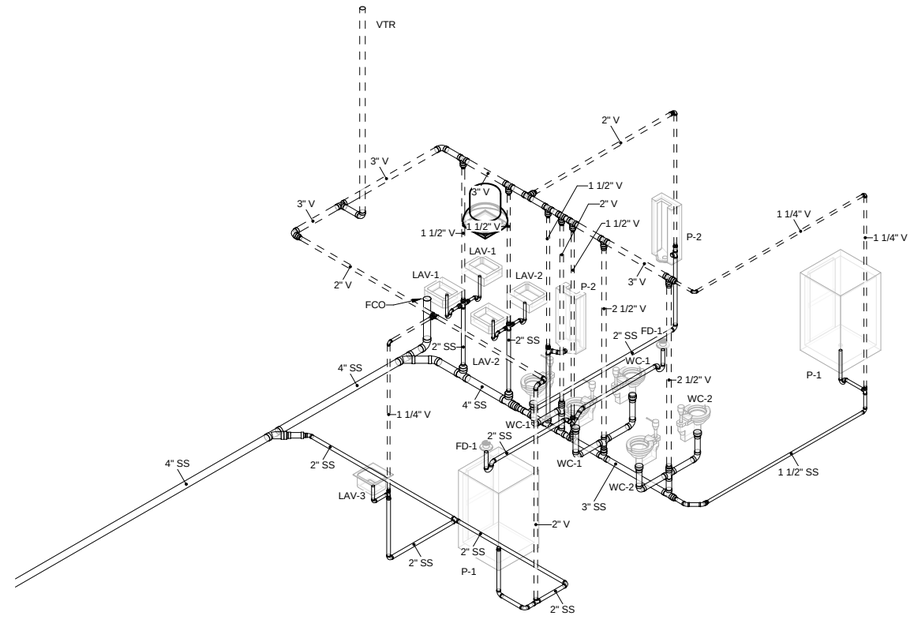

WASTE AND VENT RISER DIAGRAM - AREA A

SCALE:

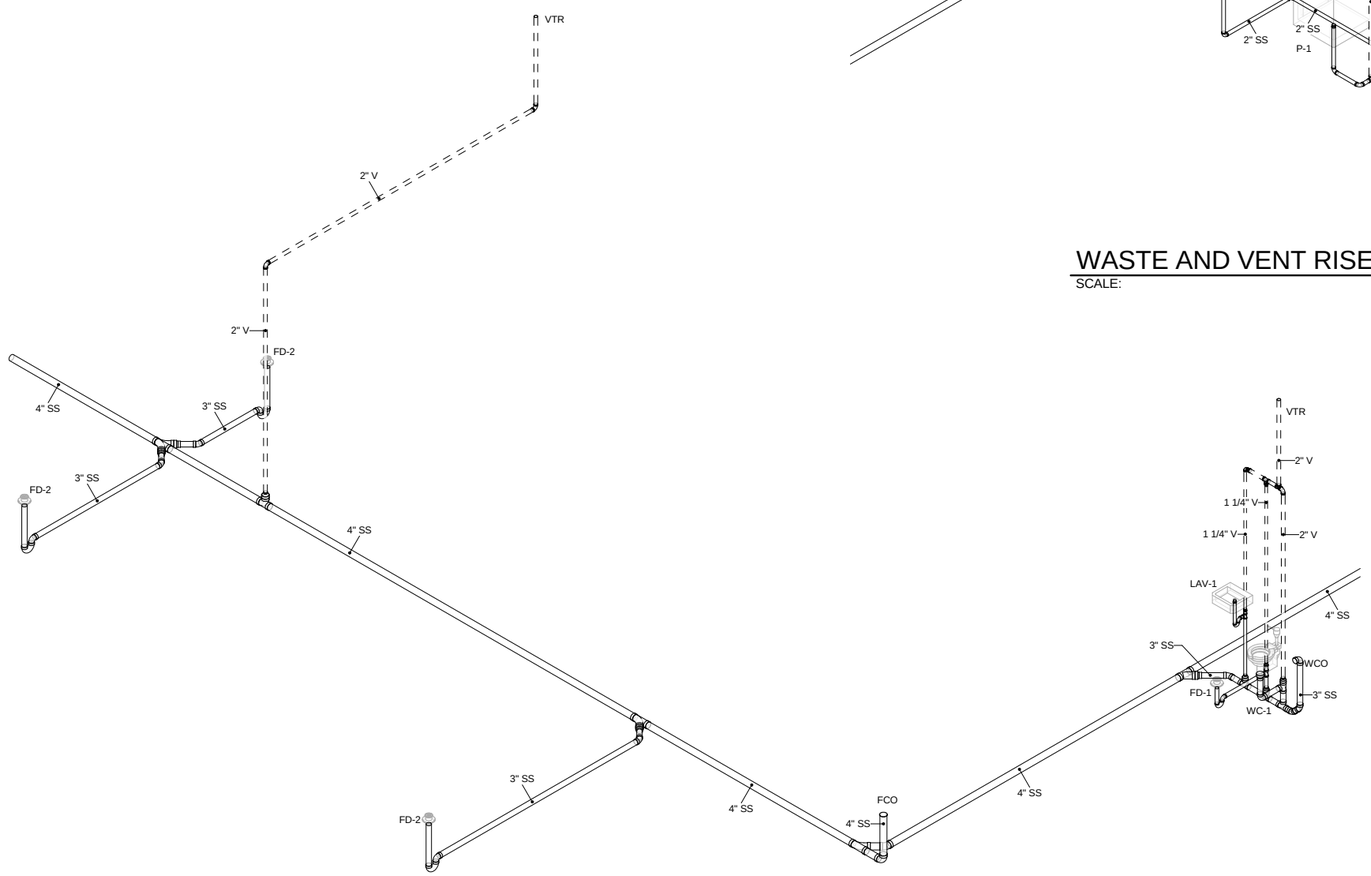

WASTE AND VENT RISER DIAGRAM - AREA B

SCALE:

US Army Corps of Engineers ®
HUNTSVILLE CENTER

SYMBOL	DESCRIPTION	DATE	BY

DESIGN BY: JCS
DRAWN BY: JCS
SBMT BY:
CKD BY: SW
PLOT SCALE:
PLOT DATE: 6/2/2014 11:47:30 AM
SIZE D 22" x 34"
FILE NAME:
DATE: JUNE 2014
SOLICITATION NO.: N/A
CONTRACT NO.: N/A
CATEGORY CODE: 65% DESIGN PACKAGE

U.S. ARMY CORPS OF ENGINEERS
ENGINEERING AND SUPPORT CENTER, HUNTSVILLE
4820 UNIVERSITY SQ.
HUNTSVILLE, AL 35816

TRAINING SUPPORT CENTER (TSC)
STANDARD DESIGN
SMALL

WASTE AND VENT RISER DIAGRAM - AREA A & B

PLATE REFERENCE NUMBER
P-202
SHEET 34 OF 55

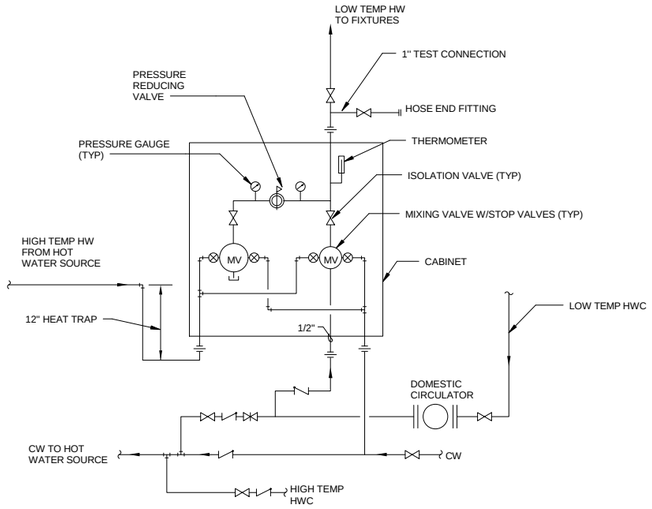

1 MIXING VALVE ASSEMBLY
NOT TO SCALE

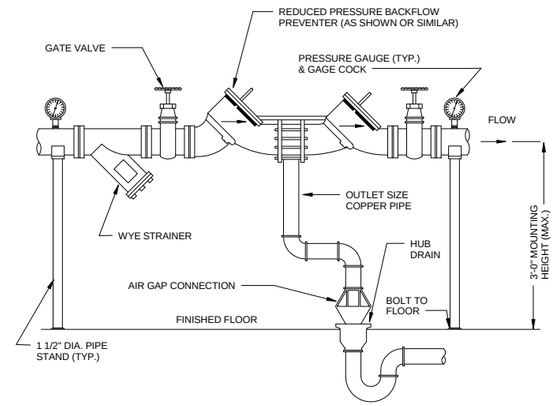

2 BACKFLOW PREVENTER
NOT TO SCALE

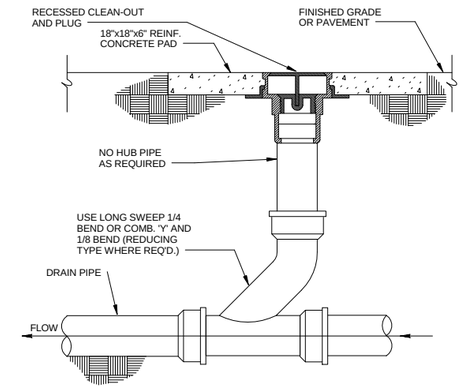

3 CLEANOUT DETAIL
NOT TO SCALE

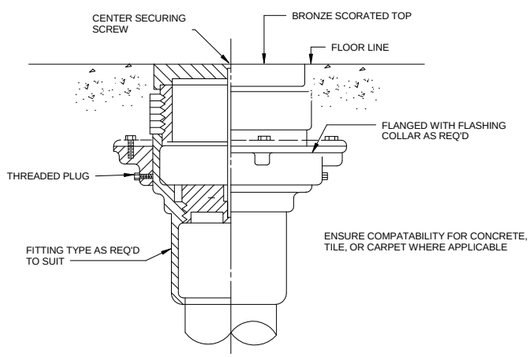

4 FLOOR CLEANOUT DETAIL
NOT TO SCALE

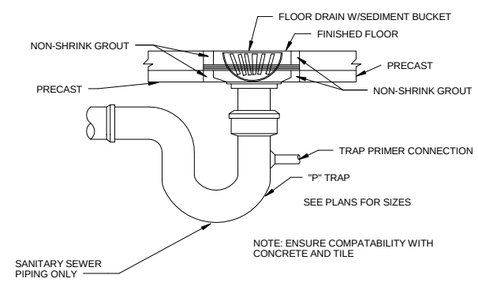

5 FLOOR DRAIN W/SEDIMENT BUCKET DETAIL
NOT TO SCALE

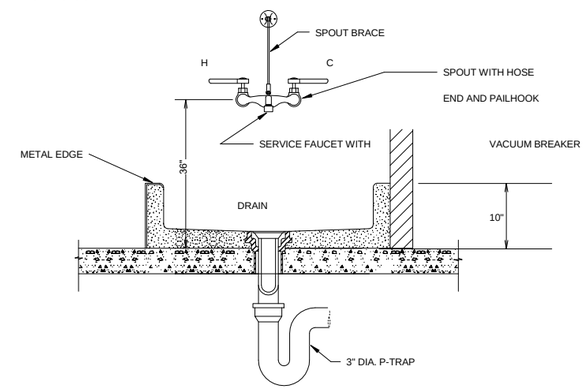

6 MOP SINK DETAIL
NOT TO SCALE

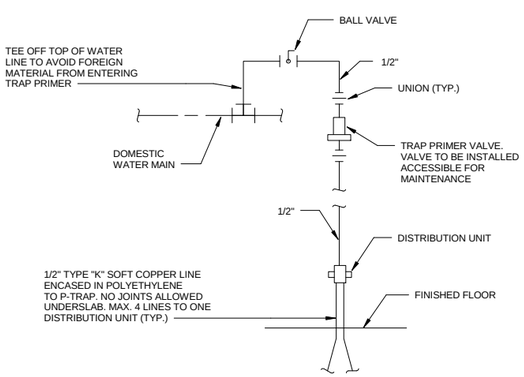

7 TRAP PRIMER
NOT TO SCALE

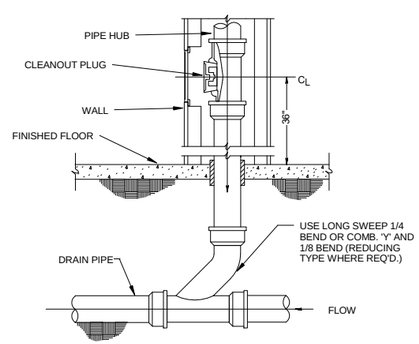

8 WALL CLEANOUT
NOT TO SCALE

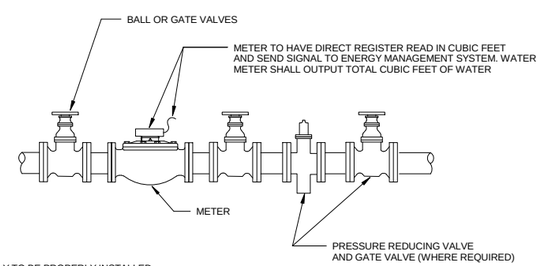

NOTES:

1. METERING ASSEMBLY TO BE PROPERLY INSTALLED AND ADEQUATELY SUPPORTED TO ALLOW FOR EASY MAINTENANCE, REPAIR AND REPLACEMENT. PROVIDE POWER AND CONNECTIONS TO SYSTEM.

9 WATER METER
NOT TO SCALE

US Army Corps of Engineers ®
HUNTSVILLE CENTER

SYMBOL	DESCRIPTION	DATE	BY

DESIGN BY: JCS | DATE: JUNE 2014
DRAWN BY: JCS | CKD BY: SW | SOLICITATION NO.: N/A
SBMT BY: | PLOT DATE: 6/2/2014 11:47:34 AM | CONTRACT NO.: N/A
PLOT SCALE: As indicated | CATEGORY CODE: 65% DESIGN PACKAGE
PLOT SIZE: 22" x 34" | FILE NAME:

U.S. ARMY CORPS OF ENGINEERS
ENGINEERING AND SUPPORT CENTER, HUNTSVILLE
4820 UNIVERSITY SQ.
HUNTSVILLE, AL 35816

TRAINING SUPPORT CENTER (TSC)
STANDARD DESIGN
SMALL

PLUMBING DETAILS

PLATE REFERENCE NUMBER
P-501
SHEET 35 OF 55

MARK	TYPE	DESCRIPTION	MOUNTING		CONNECTION			NOTES
			TYPE	HEIGHT	C.W. (IN)	H.W. (IN)	WASTE (IN)	
FD-1	FLOOR DRAIN	2" FLOOR DRAIN	FLOOR	-			2"	-
FD-2	FLOOR DRAIN	3" FLOOR DRAIN	FLOOR	-			3"	-
LAV-1	LAVATORY (ADULT)	ADULT HEIGHT, 20" x 18" VITREOUS CHINA	WALL	-	1/2"	1/2"	1 1/4"	AUTO FAUCET w/GOOSENECK SPOUT
LAV-2	LAVATORY (HDCP)	HANDICAP HEIGHT, 20" x 18" VITREOUS CHINA	WALL	31" A.F.F.	1/2"	1/2"	1 1/4"	AUTO FAUCET w/GOOSENECK SPOUT
LAV-3	SINK (KITCHEN)	25" x 22" x 8" COUNTERTOP, STAINLESS STEEL, 1 COMPARTMENT	COUNTERTOP	-	1/2"	1/2"	1 1/2"	AUTO FAUCET w/GOOSENECK SPOUT
P-1	SHOWER	VERTICAL SHOWER STATION	FLOOR	-	1/2"	1/2"	1 1/2"	-
P-2	URINAL (STALL)	VITREOUS CHINA	FLOOR	-	3/4"		2"	-
WC-1	TOILET (ADULT)	ADULT HEIGHT VITREOUS CHINA, TOP SPUD, ELONGATED BOWL	FLOOR	-	1"		4"	FLUSH VALVE, ELONGATED SEAT
WC-2	TOILET (HDCP)	HANDICAP HEIGHT, VITREOUS CHINA, TOP SPUD, ELONGATED BOWL	FLOOR	18" RIM HEIGHT	1"		4"	FLUSH VALVE, ELONGATED SEAT

US Army Corps of Engineers ®
HUNTSVILLE CENTER

SYMBOL	DESCRIPTION	DATE	BY

DESIGN BY: JCS
DRAWN BY: JCS
SBMT BY:
CKD BY: SW
PLOT DATE: 6/3/2014 11:47:38 AM
DATE: JUNE 2014
SOLICITATION NO.: N/A
CONTRACT NO.: N/A
CATEGORY CODE: 835% DESIGN PACKAGE
PLOT SCALE:
SIZE: D 22" X 34"
FILE NAME:

U.S. ARMY CORPS OF ENGINEERS
ENGINEERING AND SUPPORT CENTER, HUNTSVILLE
4820 UNIVERSITY SQ.
HUNTSVILLE, AL 35816

TRAINING SUPPORT CENTER (TSC)
STANDARD DESIGN
SMALL

PLUMBING SCHEDULES

PLATE REFERENCE NUMBER
P-601

5 | 4 | 3 | 2 | 1

ABBREVIATIONS

A	
A/C	AIR CONDITION (- ING, -ER, -ED)
ABS	ABSOLUTE
AC UNIT	AIR CONDITIONING UNIT
ACH	AIR CHANGES PER HOUR
ADA	AMERICANS WITH DISABILITIES ACT
ADP	APPARATUS DEW POINT
AFF	ABOVE FINISHED FLOOR
AHU	AIR HANDLING UNIT
ALT	ALTITUDE
AMB	AMBIENT
APPROX	APPROXIMATE
AS	AIR SEPARATOR
ATM	ATMOSPHERE
AUX	AUXILARY
AVG	AVERAGE
B	
B	BOILER
BBD	BOILER BLOWDOWN
BF	BOILER FEED SYSTEM
BHP	BRAKE HORSEPOWER
BLDG	BUILDING
BOD	BOTTOM OF DUCT
BOP	BOTTOM OF PIPE
BP	BOILING POINT
BP	BOILER PUMP
BT	BUFFER TANK
BTU	BRITISH THERMAL UNIT
C	
CFM	FLOW, CUBIC FEET PER MINUTE
CH	CHILLER
CHWR	CHILLED WATER, SUPPLY
CHWR	CHILLED WATER, RETURN
CLG LOAD	COOLING LOAD
CMPR	COMPRESSOR
CO	CARBON MONOXIDE
CO2	CARBON DIOXIDE
COEF	COEFFICIENT
COND	CONDENS(-ER, -ING, -ATION)
CRP	CONDENSATE RETURN PUMP
CT	COOLING TOWER
CT	COOLING TOWER
CU FT	CUBIC FEET
CU IN	CUBIC INCH
CV	COEFFICIENT, VALVE FLOW
CWR	CONDENSER WATER, RETURN
CWS	CONDENSER WATER, SUPPLY
D	
D	DAMPER
DB	DRY BULB TEMPERATURE
DBA	DECIBEL
DEG	DEGREE
DENS	DENSITY
DIA	DIAMETER
DIFF	DIFFERENCE
DP	DIFFERENTIAL PRESSURE
DPT	DEW POINT TEMPERATURE
DX	DIRECT EXPANSION
E	
EA	EXHAUST AIR
EAT	ENTERING AIR TEMPERATURE
EER	ENERGY EFFICIENCY RATIO
EF	EXHAUST FAN
EFF	EFFICIENCY
EG	EXHAUST AIR GRILLE
ENT	ENTERING
ESP	EXTERNAL STATIC PRESSURE
ET	EXPANSION TANK
EVAP	EVAPOR(-E, -ING, -ED, -OR)
EWT	ENTERING WATER TEMPERATURE
EXP	EXPANSION
F	
F	TEMPERATURE FARENHEIT
FA	FREE AREA
FC	FLUID COOLER
FC	FLEX CONNECTOR
FPM	FEET PER MINUTE
FPS	FEET PER SECOND
FT	FEET
G	
GAL	GALLONS
GPH	FLOW, GALLONS PER HOUR
GPM	FLOW, GALLONS PER MINUTE
GR	GRAINS
GSHP	GROUND SOURCE HEAT PUMPE
H	
H	ENTHALPY
HG	MERCURY
HGT	HEIGHT
HP	HEAT PUMP
HPS	HIGH PRESSURE STEAM
HR	HOUR
HTHW	HIGH TEMPERATURE HOT WATER (>200 F)
HVU	HEATING VENTILATING UNIT
HWR	HYDRONIC HOT WATER, RETURN
HWS	HYDRONIC HOT WATER, SUPPLY
HX	HEAT EXCHANGER
HZ	FREQUENCY
I	
I.E.	INVERT ELEVATION
IH	INFRARED HEATER
IN	INCH
K	
K	THERMAL CONDUCTIVITY

KW	KILOWATT
KWH	KILOWATT-HOUR
L	
L	LOUVER
LAT	LEAVING AIR TEMPERATURE
LB	POUNDS
LF	LINEAR FEET
LG	LENGTH
LHG	HEAT GAIN, LATENT
LMTD	LEAST MEAN TEMPERATURE DIFFERENCE
LPS	LOW PRESSURE STEAM
LWT	LEAVING WATER TEMPERATURE
M	
MAX	MAXIMUM
MBH	1000 * BRITISH THERMAL UNIT
MIN	MINUTE
MIN	MINIMUM
MPS	MEDIUM PRESSURE STEAM
N	
N/A	NOT APPLICABLE
NC	NOISE CRITERIA
NC	NORMALLY CLOSED
NIC	NOT IN CONTRACT
NO	NORMALLY OPEN
NO / #	NUMBER
NTS	NOT TO SCALE
O	
OA	OUTSIDE AIR
OAT	OUTSDIE AIR TEMPERATURE
OZ	OUNCE
P	
PCHWP	PRIMARY CHILLED WATER PUMP
PCWP	PRIMARY CONDENSER WATER PUMP
PH	PHASE, ELECTRICAL
PHWP	PRIMARY HOT WATER PUMP
PPM	PARTS PER MILLION
PRESS	PRESSURE
PRV	PRESSURE REDUCING VALVE
PSF	POUNDS PER SQUARE FOOT
PSI	POUNDS PER SQUARE IN
PSIA	PSI, ABSOLUTE
R	
R	THERMAL RESISTANCE
RA	RETURN AIR
RAT	RETURN AIR TEMPERATURE
REFR	REFRIGERANT
RG	RETURN AIR GRILLE
RH	RELATIVE HUMIDITY
RPM	REVOLUTION PER MINUTE
S	
S	ENTROPY
SA	SUPPLY AIR
SAT	SUPPLY AIR TEMPERATURE
SC	SHADING COEFFICIENT
SCFM	CFM, STANDARD CONDITIONS
SCFS	CUBIC FEET PER SECOND, STANDARD
SCHWP	SECONDARY CHILLED WATER PUMP
SD	SUCTION DIFFUSER
SD	SUPPLY AIR DIFFUSER
SF	SUPPLY FAN
SF	SAFETY FACTOR
SG	SPECIFIC GRAVITY
SG	SUPPLY AIR GRILLE
SHG	SENSIBLE HEAT GAIN
SHGC	SENSIBLE HEAT GAIN COEFFICIENT
SHR	SENSIBLE HEAT RATIO
SHWP	SECONDARY HOT WATER PUMP
SP	STATIC PRESSURE
SP HT	SPECIFIC HEAT
SPEC	SPECIFICATION
SQ	SQUARE
STD	STANDARD
SUCT	SUCTION
T	
T STAT	THERMOSTAT
TAB	TEST AND BALANCE
TEMP	TEMPERATURE
TG	TRANSFER AIR GRILLE
TON	TON OF REFRIGERATION (12,000 BTU)
TXV	THERMOSTATIC EXPANSION VALVE
U	
UH	UNIT HEATER
V	
V	VALVE
VAV	VARIABLE AIR VOLUME
VD	VOLUME DAMPER
VENT	VENTILATION
VFD	VARIABLE FREQUENCEY DRIVE
VP	VELOCITY PRESSURE
VSD	VARIABLE SPEED DRIVE
W	
W	WATT
WB	WET BULB TEMPERATURE
WC	WATER COLUMN
WSHP	WATER SOURCE HEAT PUMP
WT	WEIGHT
Y	
YD	YARD
YR	YEAR

SYMBOLS

PIPING

BALL VALVE
BUTTERFLY VALVE
CHECK VALVE
GATE VALVE
AUTOMATIC FLOW CONTROL VALVE
MANUAL CALIBRATED BALANCE VALVE
GLOBE VALVE
PRESSURE REDUCING VALVE
3-WAY CONTROL VALVE, DDC
2-WAY CONTROL VALVE, DDC
WYE STRAINER
PRESSURE GAUGE
THERMOSTAT

DUCTWORK

	EXISTING DUCTWORK TO BE REMOVED
24X12	RECTANGULAR DUCT. FIRST DIMENSION IS SIDE SHOWN. DIMENSIONS ARE FREE AREA
	45 DEG BRANCH TAKE-OFF
	DUCT TRANSITION
	MITERED ELBOW WITH TURNING VANES
	RECT. TO ROUND SPIN-IN FITTING W/DAMPER
10"	ROUND DUCT WITH DIAMETER SIZE DIMENSIONS ARE FREE AREA
	FLEXIBLE DUCT
	SUPPLY /OUTDOOR AIR DUCT
	RETURN AIR DUCT
	EXHAUST AIR DUCT
	MANUAL VOLUME DAMPER
	CONTROL/MOTORIZED DAMPER
	FIRE DAMPER
T	THERMOSTAT
E	EMERGENCY SHUTDOWN SWITCH
S	TEMPERATURE SENSOR
CO	CARBON DIOXIDE SENSOR
H	HUMIDITY SENSOR/HUMIDISTAT

GENERAL NOTES:

A "HVAC GENERAL NOTES" APPLY TO HVAC DRAWINGS. "PLAN NOTES" APPLY ONLY TO THE SHEETS ON WHICH THEY APPEAR. THE WORD "PROVIDE" MEANS "FURNISH AND INSTALL".

B MECHANICAL DRAWINGS ARE DIAGRAMMATIC TO SHOW DESIGN INTENT. PROVIDE ANY ADDITIONAL DROPS, RISES, OR OFFSETS REQUIRED FOR A COMPLETE SYSTEM INSTALLATION. COORDINATE EXACT ROUTING OF MECHANICAL WORK WITH ALL OTHER TRADES AND OBSTRUCTIONS PRIOR TO BEGINNING WORK. COORDINATE EXACT LOCATIONS OF CEILING MOUNTED EQUIPMENT WITH LIGHTS, CEILING GRID, SPRINKLERS AND OTHER OBSTRUCTIONS. FIELD VERIFY EXISTING CONDITIONS IF APPLICABLE.

C EQUIPMENT SHOWN ON THE DRAWINGS WAS OBTAINED FROM COMMON MANUFACTURERS OF HVAC EQUIPMENT AND ACCOUNTS FOR CLEARANCES AND OVERALL DIMENSIONS. SELECT AND PROVIDE HVAC EQUIPMENT THAT WILL FIT IN THE MECHANICAL SPACES PROVIDED, WHILE MAINTAINING MANUFACTURER'S MAINTENANCE CLEARANCES.

D COORDINATE WITH ROOF CONTRACTOR WATERPROOFING OF ROOF PENETRATIONS AND SUPPORTS OF ROOF MOUNTED EQUIPMENT. PROVIDE FLASHING FOR ROOF CURBS AND DUCTWORK. PROVIDE BOOTS FOR PIPES. PROVIDE PITCH POCKETS FOR REFRIGERANT LINES AND ROOF SUPPORTS THAT ARE NOT PIPES OR CURBS.

E ROUTE HORIZONTAL DUCT AS HIGH AS POSSIBLE & AVOID INTERFERENCE WITH OTHER DUCTS, PIPING, LIGHTS, AND STRUCTURE. ROUTE HORIZONTAL PIPES PARALLEL TO WALLS AND ABOVE CEILINGS & AVOID INTERFERENCE AND CONTACT WITH DUCTS, OTHER PIPING, LIGHTS, AND STRUCTURE.

F DO NOT INSTALL ANY EQUIPMENT OR FABRICATE ANY DUCTWORK PRIOR TO VERIFICATION OF ROUTING AND AVAILABILITY OF SPACE. COORDINATE SPACE REQUIREMENT WITH ALL OTHER TRADES.

G PROVIDE SUPPORT FOR ALL DUCTWORK, PIPING, AND MECHANICAL EQUIPMENT. FIELD VERIFY ALL EQUIPMENT DIMENSIONS PRIOR TO FABRICATION OF EQUIPMENT SUPPORTS. WHERE INDICATED ON DRAWINGS, FLOOR MOUNTED EQUIPMENT SHALL HAVE HOUSEKEEPING PADS EXTENDING 4 INCHES OUTSIDE THE EQUIPMENT ENVELOPE AND MINIMUM 4 INCHES HIGH FOR EQUIPMENT WITHOUT DRAINS OR 6 INCHES HIGH FOR EQUIPMENT WITH DRAINS.

H COORDINATE WITH GENERAL CONTRACTOR ACCESS PANEL LOCATIONS IN WALLS AND DRYWALL CEILINGS FOR ACCESS TO VALVES, DAMPERS, CONTROLS, EQUIPMENT REQUIRING SERVICING, AND DUCTWORK ACCESS PANELS. DUCTWORK ACCESS PANELS SHALL BE PROVIDED FOR FIRE DAMPERS, AND ACTUATORS IN THE DUCTWORK, PANEL SIZE SHALL BE AS REQUIRED PER THE SPECIFICATIONS.

I DUCT DIMENSIONS NOTED ON THE DRAWINGS ARE INSIDE FREE AREA DIMENSIONS. DIFFUSER AND GRILLE NECK SIZES ARE THE SAME DIMENSIONS AS THE DUCTWORK RUN-OUT TO THE DEVICE, UNLESS OTHERWISE NOTED.

J INSULATED FLEXIBLE DUCT SHALL BE USED TO CONNECT SUPPLY AIR DIFFUSERS, UNLESS SHOWN OTHERWISE. THE MAXIMUM LENGTH OF RUN FOR FLEXIBLE DUCT SHALL BE 5'-0" AND SHALL BE INSTALLED FREE OF KINKS AND ABRUPT TURNS. MAXIMUM UNSUPPORTED LENGTH SHALL BE 3'-0". FLEXIBLE DUCT TO DIFFUSER SHALL BE SAME SIZE AS DIFFUSER NECK, UNLESS OTHERWISE NOTED.

K BRANCH TAPS SHALL USE EITHER A 45 DEGREE OR BELL ENTRY. BRANCH EXTRACTORS ARE NOT TO BE USED. PROVIDE TRANSITIONS AT ALL CHANGES IN DUCT SIZE, INCLUDING DIFFUSERS AND GRILLES, UNLESS SHOWN OR NOTED OTHERWISE. FLEXIBLE DUCT CONNECTIONS SHALL BE USED TO ISOLATE ALL FAN -POWERED EQUIPMENT.

L SUPPLY, RETURN AND EXHAUST DIFFUSERS/GRILLES SHALL HAVE BALANCE DAMPERS IN THE DUCT, UNLESS DAMPERS ARE NOTED IN THE AIR DEVICE SCHEDULE. LOCATE BALANCE DAMPERS AS NEAR AS POSSIBLE TO DUCT BRANCH TAKEOFF WHILE MINIMIZING ACCESS DIFFICULTIES. DAMPERS TO AIR DEVICES SHALL BE LOCKING QUADRANT TYPE, WITH A STAND-OFF FOR DUCTS WITH INSULATION.

M REFER TO ARCHITECTURAL DRAWINGS AND PLANS FOR EXACT LOCATIONS OF DIFFUSERS, LINEAR SLOT DIFFUSERS, REGISTERS, GRILLES AND LOUVERS.

N EXPOSED DUCT IN OCCUPIED SPACES TO BE PAINTED, COLOR TO BE SELECTED BY ARCHITECT.

O RUN-OUT PIPES TO COILS 3/4" UNLESS OTHERWISE NOTED. NOTED PIPE SIZES THE SAME IN DIRECTION OF DECREASING FLOW TILL CHANGED BY ANOTHER PIPE SIZE NOTE.

P USE FITTINGS FOR ALL PIPE CHANGES IN DIRECTION AND SIZE AND BRANCH CONNECTIONS. EXTRUDED TEE CONNECTIONS AND BUSHINGS SHALL NOT BE USED. PROVIDE ISOLATION VALVES ON ALL BRANCHES OFF MAIN PIPE.

Q FOR HYDRONIC PIPES, INSTALL MANUAL AIR VENTS AT HIGH POINTS AND DRAIN VALVES AT THE LOW POINTS OF THE PIPE. FOR EQUIPMENT WITH DRAINS, PROVIDE DRAIN PIPE FROM THE EQUIPMENT TO A FLOOR DRAIN OR MOP SINK.

R REFRIGERANT LINE SIZES PROVIDED ARE PRELIMINARY. COORDINATE LINE SIZES WITH MANUFACTURER'S RECOMMENDATIONS FOR ACTUAL EQUIPMENT INSTALLED. A FILTER DRIER, SOLENOID VALVE, SIGHT GLASS, AND THERMAL EXPANSION VALVE SHALL BE INSTALLED IN THE LIQUID LINE UPSTREAM OF THE EVAPORATOR. A FILTER DRIER SHALL BE INSTALLED IN THE SUCTION LINE UPSTREAM OF THE CONDENSING UNIT.

S AIR CONDITIONING UNITS INSTALLED ABOVE A CEILING SHALL BE PROVIDED WITH CONDENSATE OVERFLOW DETECTION TO DE-ENERGIZE UNIT AND ALARM DDC SYSTEM. COMMUNICATION ROOM AC UNITS SUSPENDED FROM STRUCTURE SHALL BE PROVIDED WITH AN AUXILIARY DRAIN PAN AND OVERFLOW DETECTION BELOW THE UNIT. COLD WATER PIPES INSTALLED ABOVE ELECTRICAL EQUIPMENT SHALL HAVE INSULATED AUXILIARY DRAIN PANS WITH OVERFLOW DETECTION THAT ALARMS THE DDC SYSTEM. COORDINATE WITH ELECTRICAL CONTRACTOR TO PREVENT ROUTING CHILLED WATER, COLD WATER, AND CONDENSATE PIPE OVER ELECTRIC EQUIPMENT WHERE POSSIBLE.

T EQUIPMENT DESIGNATED TO HAVE A FACTORY MOUNTED DISCONNECT SWITCH SHALL BE SIZED FOR THE ELECTRICAL CHARACTERISTICS OF THAT PIECE OF EQUIPMENT. EQUIPMENT THAT DOES NOT HAVE A FACTORY MOUNTED DISCONNECT SHALL HAVE A FIELD INSTALLED DISCONNECT PROVIDED AND INSTALLED BY THE ELECTRICAL CONTRACTOR. MECHANICAL CONTRACTOR SHALL PROVIDE VARIABLE FREQUENCY DRIVES AND STARTERS WHERE NOT PROVIDED BY EQUIPMENT MANUFACTURER. VARIABLE FREQUENCY DRIVES AND STARTERS SHALL BE INSTALLED AND WIRED BY THE ELECTRICAL CONTRACTOR.

U SUPPLY CONTROL POWER TRANSFORMERS, ALL LOW VOLTAGE WIRING, AND WIRING FROM POWER SUPPLY TO CONTROL TRANSFORMERS AND DEVICES. HUMIDISTATS SHALL BE WALL MOUNTED IN THE SPACE TO BE CONTROLLED. FURNISH, INSTALL, AND WIRE THERMOSTATS, EXCEPT WHERE PROVIDED BY THE FACTORY. THERMOSTATS SHALL AVOID CASEWORK. SUPPLY CURRENT SENSORS TO ELECTRICAL CONTRACTOR FOR INSTALLATION IN POWER WIRING.

V UNLESS OTHERWISE NOTED, WALL THERMOSTATS/TEMPERATURE SENSORS SHALL BE MOUNTED ON THE WALL A MINIMUM HEIGHT OF 54" ABOVE FINISHED FLOOR.

W FIRE BARRIERS ARE SHOWN ON LIFE SAFETY/FIRE PROTECTION DRAWINGS. PIPE PENETRATIONS THRU FIRE BARRIERS SHALL BE SEALED WITH FIRE STOP SUITABLE FOR THE RATING OF THE WALL OR FLOOR BEING PENETRATED. DUCT PENETRATIONS THRU FIRE BARRIERS SHALL HAVE A FIRE DAMPER INSTALLED AT THE PENETRATION SUITABLE FOR THE RATING OF THE WALL OR FLOOR BEING PENETRATED. REFER TO FIRE PROTECTION DRAWINGS FOR ADDITIONAL INFORMATION AND REQUIREMENTS.

X DUCT-MOUNTED SMOKE DETECTORS SHALL BE PROVIDED ON AIR DISTRIBUTION SUPPLY SYSTEMS HAVING A CAPACITY GREATER THAN 2000 CFM. SMOKE DETECTOR SHALL BE MOUNTED DOWNSTREAM OF THE AIR FILTERS AND AHEAD OF ANY BRANCH CONNECTIONS. RETURN SYSTEM DUCT-MOUNTED SMOKE DETECTORS SHALL NOT BE REQUIRED WHERE THE ENTIRE SPACE SERVED BY THE AIR DISTRIBUTION SYSTEM IS PROTECTED BY A SYSTEM OF AREA SMOKE DETECTORS. DUCT-MOUNTED SMOKE DETECTORS TO BE FURNISHED AND WIRED TO FIRE ALARM SYSTEM BY QUALIFIED FIRE ALARM SYSTEM INSTALLER. COORDINATE TYPE AND LOCATION WITH FIRE ALARM SYSTEM INSTALLER.

Y CONSTRUCT DUCTWORK TO THE FOLLOWING STATIC PRESSURE CLASSIFICATIONS:

SUPPLY DUCT (DOAS, MUA) +2 IN WG
SUPPLY DUCT (HP) +0.5 IN WG
RETURN DUCT (HP) -0.5 IN WG
OUTSIDE AIR DUCT (DOAS, MUA) -2 IN WG
EXHAUST DUCT (UPSTREAM OF FAN) -2 IN WG
EXHAUST DUCT (DOWNSTREAM OF FAN) +0.5 IN WG

Z COMMISSION HVAC SYSTEMS AND EQUIPMENT AND SYSTEMS REQUIRING COMMISSIONING FOR LEED FUNDAMENTAL COMMISSIONING IN ACCORDANCE WITH ASHRAE GUIDELINE 1 AND LEED REQUIREMENTS. THE COMMISSIONING AGENT SHALL BE CERTIFIED BY AABC, NEBB, OR TABB AS DESCRIBED IN GUIDELINE 1.

AA WORK INDICATED ON DRAWINGS IS NEW UNLESS OTHERWISE NOTED ON THE DRAWINGS

BB SOME SYMBOLS/ABBREVIATIONS INDICATED ON THIS LEGEND SHEET MAY NOT APPEAR IN THE DRAWINGS.

CC DO NOT LOCATE MECHANICAL WORK IN ELECTRICAL OR COMMUNICATION ROOMS, EXCEPT FOR RUNOUTS SPECIFICALLY SERVING THE RESPECTIVE ROOM.

DD MATERIALS INSTALLED IN A RETURN AIR PLENUM (CEILING OR ROOM) MUST BE RATED FOR AIR PLENUM INSTALLATION: COORDINATE WITH ALL OTHER TRADES ACCORDINGLY.

DESIGNER NOTES:

1 PLEASE NOTE THAT THE MECHANICAL DESIGN PROVIDED HEREIN IS FOR INFORMATION ONLY. THE MECHANICAL DRAWINGS ARE NOT MANDATORY AND ARE PROVIDED TO GIVE DESIGNERS SUGGESTIONS ON HOW A TRAINING SUPPORT CENTER(TSC) COULD BE MECHANICALLY DESIGNED.

2 THE MECHANICAL DESIGNER WILL BE ENTIRELY RESPONSIBLE FOR SELECTING THE APPROPRIATE EQUIPMENT AND SYSTEMS FOR ANY SPECIFIC SITE DESIGN.

3 THE DESIGN PROVIDED HEREIN IS BASED UPON A FICTIONAL SITE LOCATED IN FORT BRAGG, NORTH CAROLINA.

4 THE DESIGNER OF RECORD SHALL VERIFY VENTILATION REQUIREMENTS MEET ASHRAE 62.1 FOR EACH SPACE WITHIN THE BUILDING. OCCUPANCIES USED FOR VENTILATION CALCULATIONS SHOULD BE VERIFIED WITH THE CUSTOMER AS SITE SPECIFIC REQUIREMENTS MAY VARY FROM THOSE USED IN THIS STANDARD DESIGN.

5 THE DESIGN FOR WAREHOUSE SPACES AND APPARATUS BAYS SHALL CONSIST OF INFRARED HEATERS AS REQUIRED TO MAINTAIN THE REQUIRED SPACE TEMPERATURE IN THE WINTER AND EXHAUST FANS AND LOUVERS FOR PROVIDING NATURAL VENTILATION COOLING IN THE SUMMER.

ATFP NOTES:

1 EXTERIOR EQUIPMENT: LOCATE A MINIMUM OF 33 FEET FROM BUILDING. IF CONDITIONS REQUIRE THAT EQUIPMENT BE LOCATED LESS THAN 33 FEET FROM THE BUILDING, THEN THE EQUIPMENT SHALL BE LOCATED AND ARRANGED SO THAT AN OBJECT OVER SIX INCHES INHEIGHT WOULD BE READILY OBSERVED BY BUILDING OCCUPANTS.

2 AIR INTAKES: LOCATE A MINIMUM OF 10 FEET ABOVE THE GROUND.

3 EMERGENCY SHUTOFF SWITCH: PROVIDE A SHUTOFF SWITCH IN THE HVAC CONTROL SYSTEM THAT CAN IMMEDIATELY SHUT DOWN THE AIR DISTRIBUTION SYSTEMS THROUGHOUT THE BUILDING. LOCATE THE SWITCH TO BE EASILY ACCESSIBLE BY BUILDING OCCUPANTS.

4 DAMPERS: FIT OUTSIDE AIR INTAKES, RELIEF, AND EXHAUST OPENINGS WITH LOW LEAKAGE DAMPERS THAT AUTOMATICALLY CLOSE WHEN THE AIR SHUTOFF SWITCH IS ACTIVATED. THE LOW LEAKAGE DAMPERS SHALL HAVE A LEAKAGE RATE OF LESS THAN 3 CFM/SQUARE FOOT AT A PRESSURE DIFFERENTIAL OF 3.0 INCHES STATIC PRESSURE.

5 OVERHEAD EQUIPMENT WEIGHING OVER 30 POUNDS: DESIGN ALL EQUIPMENT MOUNTINGS TO RESIST A FORCE 0.5 TIMES THE WEIGHT OF THE EQUIPMENT IN ANY HORIZONTAL DIRECTION AND 1.5 TIMES THE EQUIPMENT WEIGHT IN THE DOWNWARD DIRECTION. THIS REQUIREMENT IS SEPARATE FROM OTHER MOUNTING REQUIREMENTS FOR SEISMIC OR OTHER FORCES.

US Army Corps of Engineers ®
HUNTSVILLE CENTER

SYMBOL	DESCRIPTION	DATE	BY

DATE: JUNE 2014
SOLICITATION NO.: N/A
CONTRACT NO.: N/A
CATEGORY CODE: 65% DESIGN PACKAGE
DESIGN BY: JCS
DRAWN BY: JCS
CKD BY: SW
SBMT BY:
PLOT DATE: 6/5/2014 11:49:56 AM
PLOT SCALE: 1/4" = 1'-0"
SIZE: D 22" x 34"
FILE NAME:

U.S. ARMY CORPS OF ENGINEERS
ENGINEERING AND SUPPORT CENTER, HUNTSVILLE
4820 UNIVERSITY SQ.
HUNTSVILLE, AL 35816

TRAINING SUPPORT CENTER (TSC) STANDARD DESIGN
SMALL

HVAC LEGEND AND NOTES

PLATE REFERENCE NUMBER
M-001
SHEET 37 OF 55

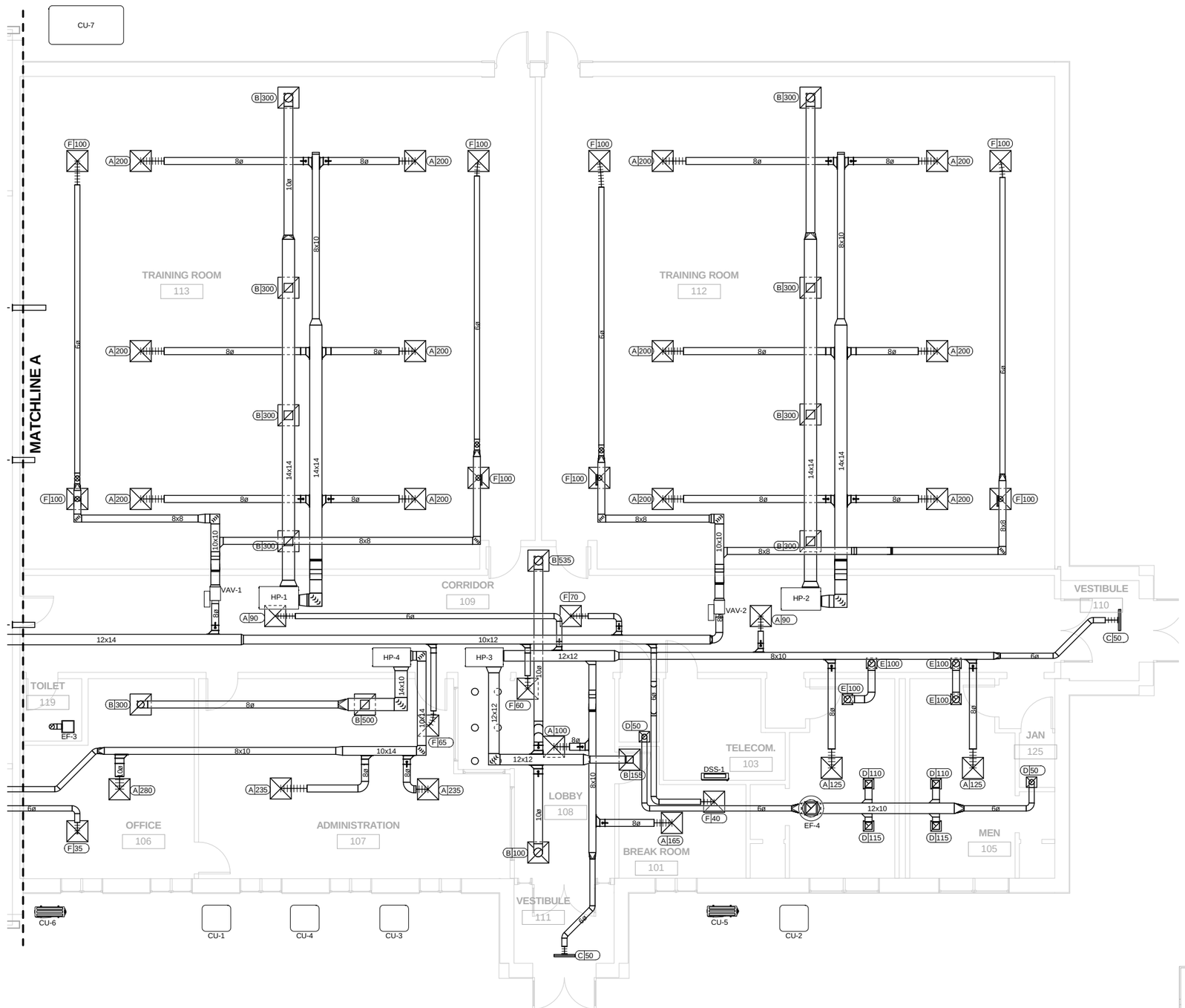

HVAC FLOORPLAN - AREA A

SCALE: 3/16" = 1'-0"

SCALE: 3/16"=1'-0"

JOB NORTH

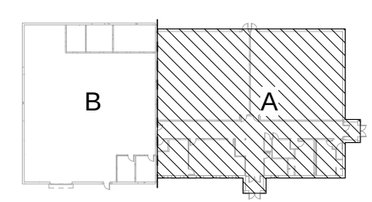

US Army Corps of Engineers ®
HUNTSVILLE CENTER

SYMBOL	DESCRIPTION	DATE	BY

DESIGN BY: JCS
DRAWN BY: JCS
SBMT BY:
DATE: JUNE 2014
SOLICITATION NO.: N/A
CKD BY: SW
CONTRACT NO.: N/A
PLOT DATE: 6/3/2014 11:44:59 AM
CATEGORY CODE: 65% DESIGN PACKAGE
PLOT SCALE: As indicated
SIZE: 24" x 36"
FILE NAME:

U.S. ARMY CORPS OF ENGINEERS
ENGINEERING AND SUPPORT CENTER, HUNTSVILLE
4820 UNIVERSITY SQ
HUNTSVILLE, AL 35816

TRAINING SUPPORT CENTER (TSC) STANDARD DESIGN
SMALL

HVAC FLOORPLAN - AREA A

PLATE REFERENCE NUMBER
M-101

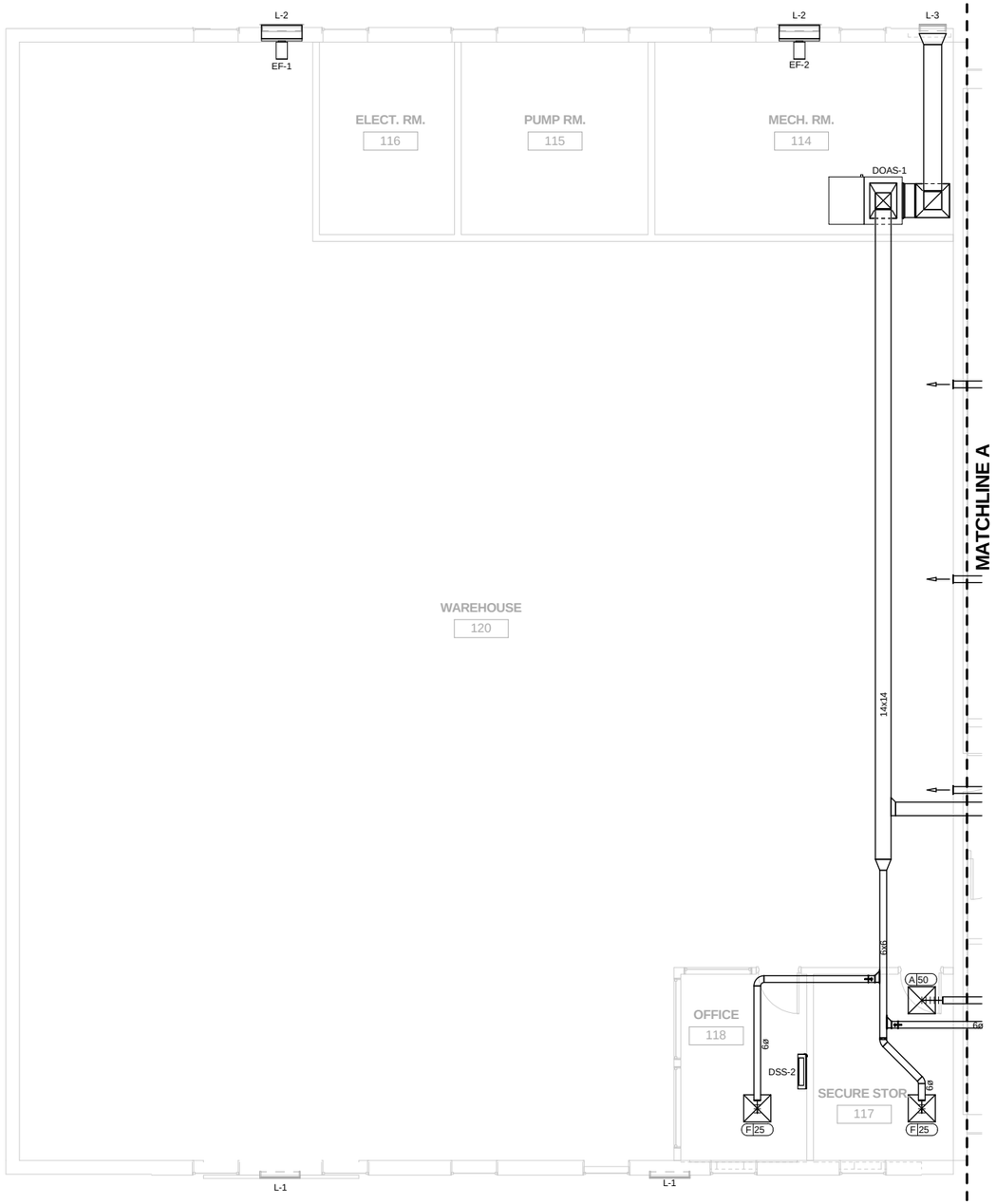

HVAC FLOORPLAN - AREA B

SCALE: 3/16" = 1'-0"

8 4 0 8
SCALE: 3/16"=1'-0"

N
JOB NORTH

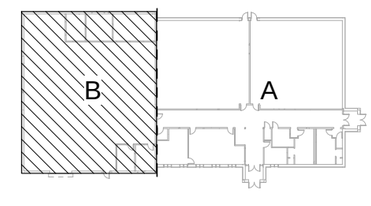

US Army Corps of Engineers ®
HUNTSVILLE CENTER

SYMBOL	DESCRIPTION	DATE	BY

DESIGN BY: JCS
DRAWN BY: JCS
SBMT BY:
PLOT SCALE: As indicated
SIZE: 22" x 34"
CKD BY: SW
PLOT DATE: 6/2/2014 11:49:11 AM
FILE NAME:
DATE: JUNE 2014
SOLICITATION NO.: N/A
CONTRACT NO.: N/A
CATEGORY CODE: 65% DESIGN PACKAGE

U.S. ARMY CORPS OF ENGINEERS
ENGINEERING AND SUPPORT CENTER, HUNTSVILLE
4820 UNIVERSITY SQ.
HUNTSVILLE, AL 35816

TRAINING SUPPORT CENTER (TSC)
STANDARD DESIGN
SMALL

HVAC FLOORPLAN - AREA B

PLATE REFERENCE NUMBER
M-102

SHEET 39 OF 55

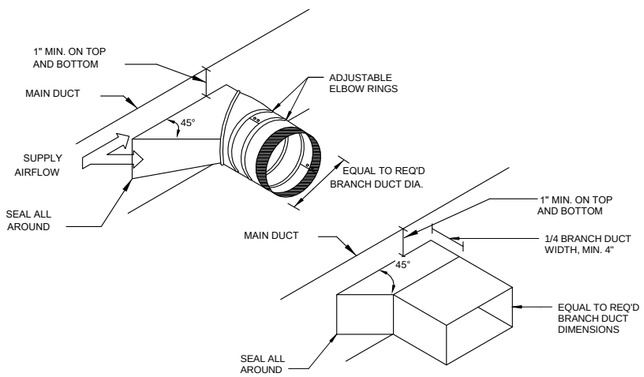

1 BRANCH DUCT TAKE-OFF DETAIL
NOT TO SCALE

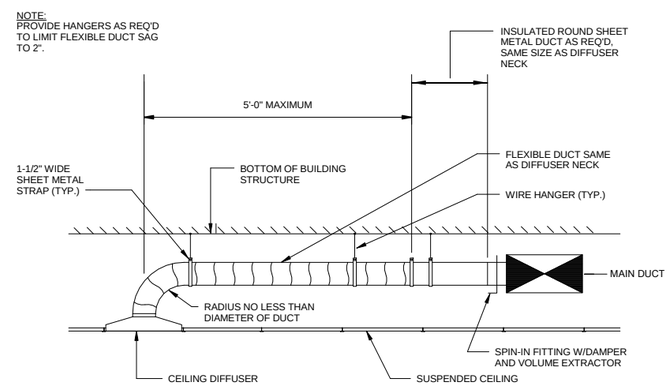

2 TYPICAL BRANCH DUCT
NOT TO SCALE

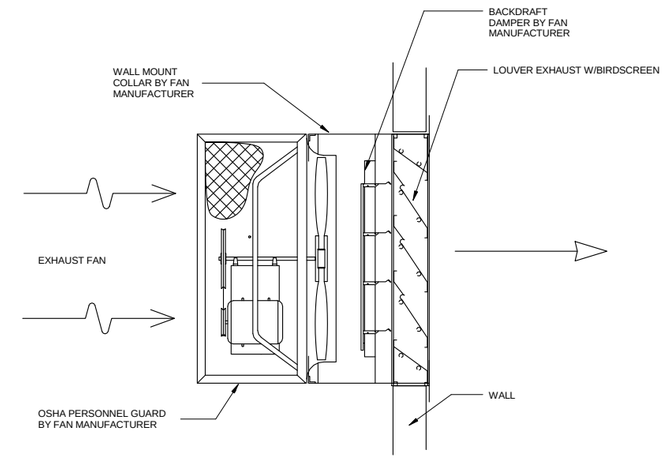

3 PROPELLER FAN DETAIL
NOT TO SCALE

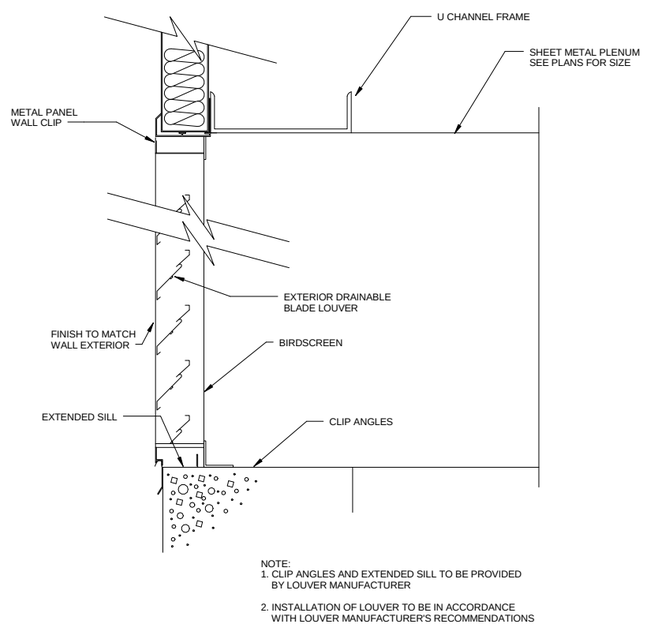

4 WALL LOUVER DETAIL
NOT TO SCALE

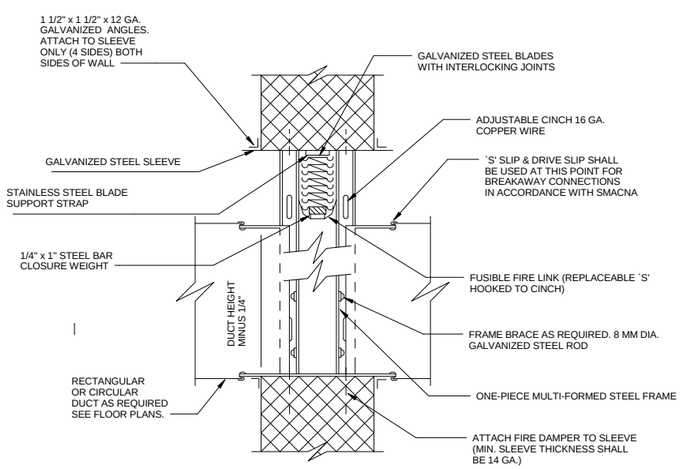

5 WALL FIRE DAMPER DETAIL
NOT TO SCALE

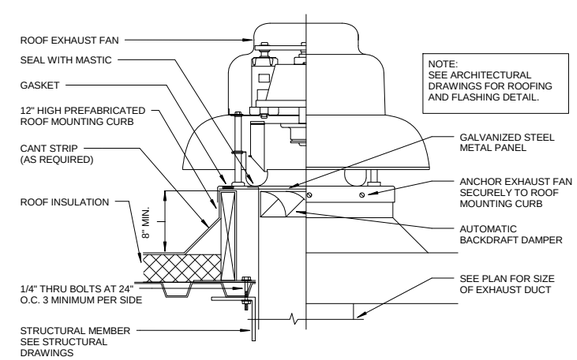

6 ROOF EXHAUST FAN
NOT TO SCALE

US Army Corps of Engineers ®
HUNTSVILLE CENTER

SYMBOL	DESCRIPTION	DATE	BY

DESIGN BY: JCS
DRAWN BY: JCS
SBMT BY:
DATE: JUNE 2014
SOLICITATION NO.: N/A
CKD BY: SW
CONTRACT NO.: N/A
PLOT DATE: 6/3/2014 11:49:19 AM
CATEGORY CODE: 835% DESIGN PACKAGE
PLOT SCALE: As indicated
SIZE: 22" X 34"
FILE NAME:

U.S. ARMY CORPS OF ENGINEERS
ENGINEERING AND SUPPORT CENTER, HUNTSVILLE
4820 UNIVERSITY SQ.
HUNTSVILLE, AL 35816

TRAINING SUPPORT CENTER (TSC) STANDARD DESIGN
SMALL
HVAC DETAILS

PLATE REFERENCE NUMBER
M-501
SHEET 40 OF 55

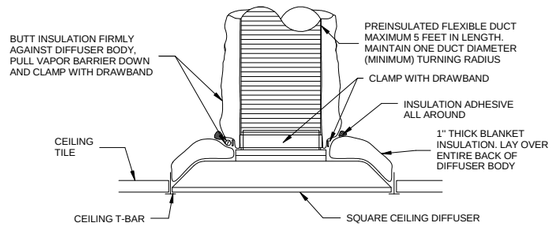

1 CEILING DIFFUSER INSTALLATION DETAIL
NOT TO SCALE

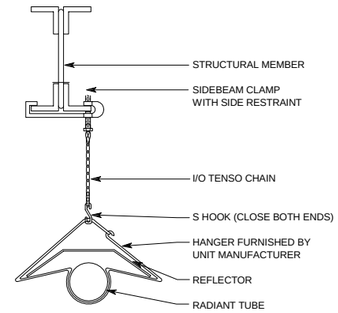

2 INFRARED HEATER SUPPORT
NOT TO SCALE

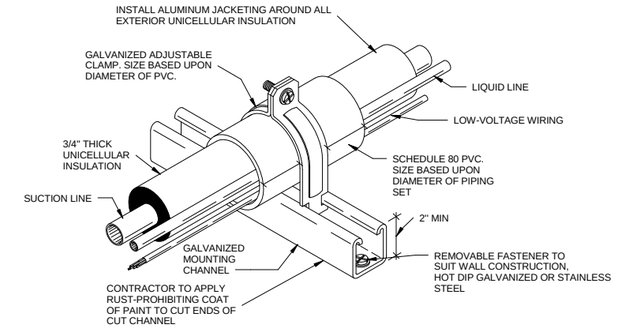

3 REFRIGERANT PIPE MOUNTING DETAIL
NOT TO SCALE

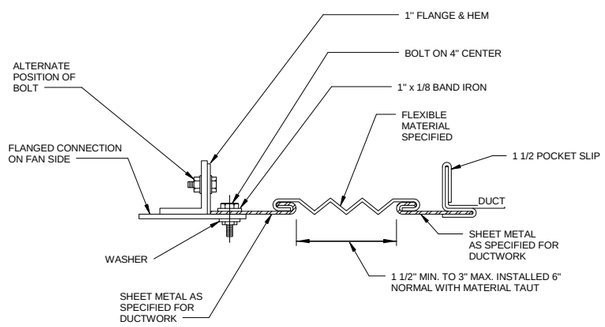

4 FLEXIBLE DUCT CONNECTION DETAIL
NOT TO SCALE

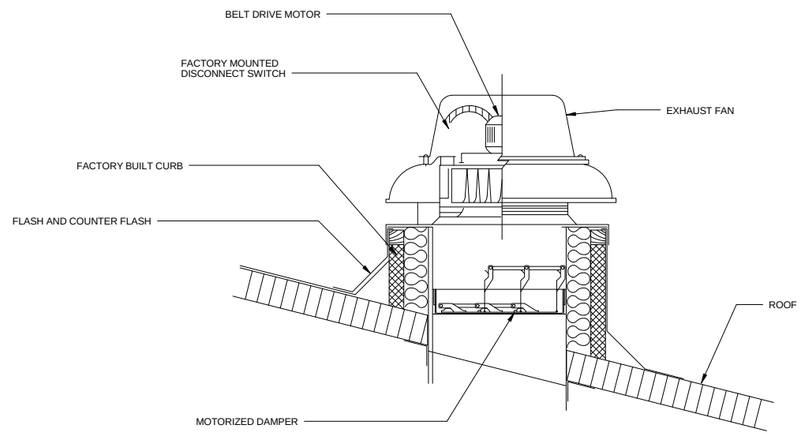

5 ROOFTOP EXHAUST FAN INSTALLATION DETAIL
NOT TO SCALE

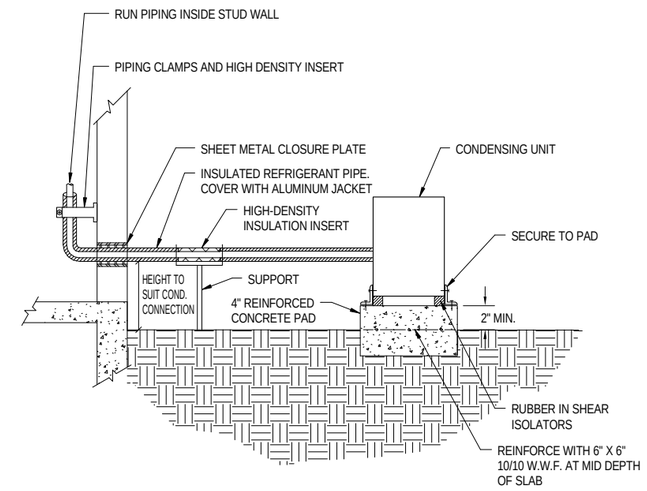

6 OUTDOOR UNIT MOUNTING DETAIL
NOT TO SCALE

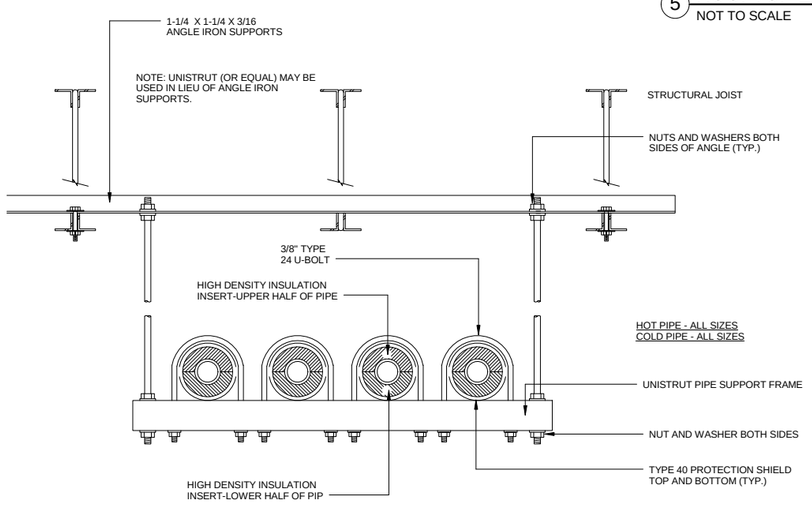

7 PIPE HANGER SUPPORT DETAIL
NOT TO SCALE

US Army Corps of Engineers ®
HUNTSVILLE CENTER

SYMBOL	DESCRIPTION	DATE	BY

DESIGN BY: JCS | DATE: JUNE 2014
DRAWN BY: JCS | CKD BY: SW | SOLICITATION NO.: N/A
SBMT BY: | PLOT DATE: 6/2/2014 11:49:22 AM | CONTRACT NO.: N/A
PLOT SCALE: As indicated | SIZE: 22" X 34" | CATEGORY CODE: 65% DESIGN PACKAGE
FILE NAME:

U.S. ARMY CORPS OF ENGINEERS
ENGINEERING AND SUPPORT CENTER, HUNTSVILLE
4820 UNIVERSITY SQ.
HUNTSVILLE, AL 35816

TRAINING SUPPORT CENTER (TSC) STANDARD DESIGN
SMALL
HVAC DETAILS

PLATE REFERENCE NUMBER
M-502
SHEET 41 OF 55

FAN SCHEDULE

MARK	DUTY	TYPE	SERVING	FAN	AIRFLOW (CFM)	EXT. S.P. (IN. WC)	FAN SPEED (RPM)	DRIVE TYPE	MOTOR (HP)	MAX. NC (SONES)	WEIGHT (LBS)	NOTES
EF-1	EXHAUST	ROOF	120 WAREHOUSE	PROPELLER	4200	0.30	1200	BELT	0.75	28.00	60	1
EF-2	EXHAUST	ROOF	120 WAREHOUSE	PROPELLER	4200	0.30	1200	BELT	0.75	28.00	60	1
EF-3	EXHAUST	CEILING	119 TOILET	CENTRIFUGAL	50	0.25	800	DIRECT	44 WATTS	0.90	16	1
EF-4	EXHAUST	ROOF	WOMEN/MEN RESTROOM	CENTRIFUGAL	550	0.45	1650	DIRECT	0.25	10.40	30	1

NOTES:

1. PROVIDE BACKDRAFT DAMPER.
2. PROVIDE ROOF CURB, BIRD SCREEN, AND DISCONNECT.
3. FAN SHALL BE SPARK RESISTANT.
4. FAN SHALL BE EXPLOSION PROOF.
5. FAN SHALL BE AN UBLAST TYPE.
6. UTILITY SET SHALL BE PROVIDED WITH DISCHARGE DUCTWORK TO PROVIDE A MINIMUM DISCHARGE VELOCITY OF 3000 FT/S 20 FT ABOVE ROOF LINE.
7. FAN SHALL BE INVERTER DUTY TYPE WITH VFD.

DEDICATED OUTDOOR AIR UNIT SCHEDULE

MARK	LOCATION	SUPPLY FAN DATA				COOLING CAPACITY					HEATING CAPACITY					FILTER		SPLIT SYSTEM OUTDOOR UNIT			NOTES
								ENTERING AIR (F)			REVERSE CYCLE HEAT PUMP					PD (IN. WC)					
											AIR TEMP. (F)										
		TOTAL CFM	OA CFM	ESP (IN. WC)	MAX. HP	TOTAL COOLING (MBH)	SENSIBLE COOLING (MBH)	DB	WB	MIN. SEER	ENT. DB	LVG. DB	HEATING (MBH)	MIN. COP	ELECTRIC COIL KW	INT.	FINAL	MARK (OUTDOOR UNIT)	LOCATION	CAPACITY (MBH)	
DOAS-1	114 MECHANICAL	1200.0	1200.0			105.0	51.8	87	78	14	24	68	57	4.7				CU-7	NORTH EXTERIOR WALL	120	1, 2, 3, 4

NOTES:

1. PROVIDE UNIT WITH HOT GAS RE-HEAT.
2. PROVIDE UNIT WITH 2-STAGE COMPRESSOR.
3. PROVIDE OUTDOOR CONDENSING UNIT WITH LOUVERED HAIL GUARD, SINGLE POINT POWER CONNECTION AND DISCONNECT.
4. PROVIDE UNIT WITH HIGH PRESSURE SWITCH.

AIR DEVICE SCHEDULE

MARK	DUTY	TYPE	DIFFUSERS, GRILLES & LOUVERS			MAX AIRFLOW	FACE	SLOT DIFFUSERS			LOUVERS		MAX NC	MOUNTING	MATERIAL	FINISH	NOTES
			MODULE SIZE (IN.)	NECK SIZE (IN.)	SPACING (IN.)			LENGTH (IN.)	NO. OF SLOTS	SLOT SPACING (IN.)	FREE AREA	FREE AREA VELOCITY					
A	SA	DIFFUSER	24 X 24	NOTE 7	-	630.00	LOUVERED						30	LAY-IN	ALUMINUM	COLOR BY ARCHITECT	1, 2, 3, 5
B	RA	GRILLE	24 X 24	10	1/2	600.00	EGGCRATE						30	LAY-IN	ALUMINUM	COLOR BY ARCHITECT	1, 2, 3, 4, 5, 8
C	SA	SLOT	-	-	-	-	0 DEG. DEFLECTION	3.00	2.00	0.50			30	SURFACE	ALUMINUM	COLOR BY ARCHITECT	1, 2, 3, 4, 5
D	EA	GRILLE	8 X 8	6	1/2	240.00	35 DEG. DEFLECTION						30	SURFACE	ALUMINUM	COLOR BY ARCHITECT	1, 2, 3, 4, 5, 8
E	TA	GRILLE	8 X 8	8	1/2	240.00	EGGCRATE						30	SURFACE	ALUMINUM	COLOR BY ARCHITECT	1, 2, 3, 4, 5, 8
F	OA	DIFFUSER	24 X 24	NOTE 7	-	325.00	LOUVERED						30	LAY-IN	ALUMINUM	COLOR BY ARCHITECT	1, 2, 3, 4, 5
L-1	OA	LOUVER	36 X 36	36 X 36	6	4700.00	DRAINABLE BLADE				4.0 SF	1200 FPM	30	WALL	ALUMINUM	COLOR BY ARCHITECT	9, 10
L-2	EA	LOUVER	36 X 36	36 X 36	6	4700.00	DRAINABLE BLADE				4.0 SF	1200 FPM	30	WALL	ALUMINUM	COLOR BY ARCHITECT	9, 10
L-3	OA	LOUVER	36 X 36	24 X 24	6	1600.00	DRAINABLE BLADE				1.5 SF	1200 FPM	30	WALL	ALUMINUM	COLOR BY ARCHITECT	9, 10

NOTES:

1. PROVIDE OPPOSED BLADE DAMPER.
2. THE AIR DEVICE NOISE CRITERIA SHALL NOTE EXCEED 30, UNLESS OTHERWISE NOTED.
3. CONTRACTOR SHALL PAINT THE INSIDE OF THE DUCT CONNECTED TO THE AIR DEVICE FLAT BLACK SO THAT NO DUCTWORK IS VISIBLE THROUGH THE GRILL.
4. DEVICE SHALL BE PROVIDED WITH PLENUM BOOT.
5. THE MAXIMUM RUNOUT OF FLEXIBLE DUCT TO ANY AIR DEVICE SHALL NOT EXCEED 5'-0" IN LENGTH.
6. GRILLE/LOUVER SHALL BE MOUNTED 10'-0" A.F.F.
7. ALL NECK SIZES/FACE DIMENSIONS TO AIR DEVICES SHALL BE GREATER THAN OR EQUAL TO THE DUCTWORK RUN-OUT SHOWN ON THE PLANS.
8. LOUVER SHALL BE PROVIDED WITH WIRE MESH BIRD SCREEN.
9. LOUVER SHALL BE A DRAINABLE BLADE STATIONARY LOUVER TYPE.
10. LOUVER SHALL BE PROVIDED WITH FRONT/REAR SECURITY BARS.
11. PROVIDE GRILLE WITH SQUARE TO ROUND FITTING FROM THE MANUFACTURER.

DUCTLESS SPLIT SYSTEM SCHEDULE

MARK	LOCATION	AIRFLOW (CFM)	TOTAL CAPACITY (BTUH)	SENSIBLE CAPACITY (BTUH)	MIN. COOLING EFFICIENCY (SEER)	ELECTRICAL DATA V/HZ/Φ	NOTES
DSS-1	103 TELECOM	200	6000	4000	14	209/60/1	1
DSS-2	118 OFFICE	600	18000	18000	14	208/60/1	2

NOTES:

1. ASSOCIATED WITH CONDENSING UNIT CU-5.
2. ASSOCIATED WITH CONDENSING UNIT CU-6.

VARIABLE AIR VOLUME TERMINAL SCHEDULE

MARK	TYPE	INLET SIZE (IN.)	COOLING AIRFLOW (CFM)		HEATING AIRFLOW (CFM)	MAX S.P. DROP (IN. WC)	REHEAT COIL DATA									NOTES
			MAX.	MIN.			CAPACITY (KW)	TYPE	L.A.T. (F)	E.A.T. (F)	E.W.T. (F)	L.W.T. (F)	GPM	MAX WPD (FT)	MAX APD (IN. WC)	
VAV-1	DIGITAL	6	420	150	N/A	0.5	N/A		-	-	-	-	-	-	-	1
VAV-2	DIGITAL	6	420	150	N/A	0.5	N/A		-	-	-	-	-	-	-	1

NOTES:

1. MANUFACTURER SHALL PROVIDE ITEGRAL WALL MOUNTED CO2 SENSOR FOR DEMAND CONTROLLED VENTILATION.

SPLIT SYSTEM HEAT PUMP SCHEDULE

MARK	LOCATION	SUPPLY FAN DATA				COOLING CAPACITY					HEATING CAPACITY					FILTER		SPLIT SYSTEM OUTDOOR UNIT			NOTES
											REVERSE CYCLE HEAT PUMP					PD (IN. WC)					
											AIR TEMP. (F)										
		TOTAL CFM	OA CFM	ESP (IN. WC)	MAX. HP	TOTAL COOLING (MBH)	SENSIBLE COOLING (MBH)	EAT (F) DB/WB	LAT(F) DB/WB	MIN. SEER	ENT. DB	LVG. DB	HEATING (MBH)	MIN. COP	ELECTRIC COIL KW	INT.	FINAL	MARK (OUTDOOR UNIT)	LOCATION	CAPACITY (MBH)	
HP-1	113 TRAINING	1200	400	1.0	0.5	32.6	27.6	80/67	59/57	18	70	98	36.3	2.88	10			CU-1	SOUTH EXTERIOR WALL	3 TON	1, 2, 3, 4, 5
HP-2	114 TRAINING	1200	400	1.0	0.5	32.6	27.6	80/67	59/57	18	70	98	36.3	2.88	10			CU-2	SOUTH EXTERIOR WALL	3 TON	1, 2, 3, 4, 5
HP-3	ROOMS 101-111, 125	800	170	1.0	0.5	22.0	20.0	80/67	58/57	17.5	70	98	25	2.8	5			CU-3	SOUTH EXTERIOR WALL	2 TON	1, 2, 3, 4, 5
HP-4	OFFICE 206, ADMIN 107	800	125	0.8	0.5	22.0	20.0	80/67	58/57	17.5	70	98	25	2.8	5			CU-4	SOUTH EXTERIOR WALL	2 TON	1, 2, 3, 4, 5

NOTES:

1. PROVIDE UNIT WITH 2-STAGE SCROLL COMPRESSOR.
2. PROVIDE UNIT WITH LOW AMBIENT COOLING DOWN TO 0 DEG. (F) OPERATION.
3. PROVIDE OUTDOOR CONDENSING UNIT WITH LOUVERED HAIL GUARD, SINGLE POINT POWER, AND ELECTRICAL DISCONNECT.
4. PROVIDE UNIT WITH HIGH PRESSURE SWITCH.
5. PROVIDE CONDENSATE LINE TO EXTERIOR OF BUILDING USING 1/8" PER FOOT SLOPE. IF THE AIR HANDLING CONDENSATE CANNNOT BE DRAINED BY GRAVITY THE CONTRACTOR SHALL PROVIDE CONDENSATE PUMP TO REMOVE THE CONDENSATE.

US Army Corps of Engineers ®
HUNTSVILLE CENTER

SYMBOL | DESCRIPTION | DATE | BY

DESIGN BY: JCS
DATE: JUNE 2014
SOLICITATION NO.: N/A
DRAWN BY: JCS
CKD BY: SW
CONTRACT NO.: N/A
SBMT BY:
PLOT DATE: 6/2/2014 11:49:29 AM
CATEGORY CODE: 0510 DESIGN PACKAGE
PLOT SCALE:
FILE NAME:
SIZE: D 22" X 34"

U.S. ARMY CORPS OF ENGINEERS
ENGINEERING AND SUPPORT CENTER, HUNTSVILLE
4820 UNIVERSITY SQ.
HUNTSVILLE, AL 35816

TRAINING SUPPORT CENTER (TSC) STANDARD DESIGN
SMALL

HVAC SCHEDULES

PLATE REFERENCE NUMBER
M-601

W-X-Y-Z
##

DEVICE SYMBOL, GENERIC
USED TO REPRESENT SENSORS, INSTRUMENTS SAFETIES, AND OTHER CONTROL DEVICES
W-X-Y-Z : (SEE ABBREVIATIONS AND ACRONYMS)

GENERIC USAGE TO SHOW LOCATION OF DEVICE; PROCESS OR DEVICE BEING MEASURED OR CONTROLLED; SIGNAL TYPE; MODIFIERS AND OTHER APPLICATION INFORMATION

W-X-Y-Z
##

DEVICE SYMBOL, GENERIC
MULTIPLE OUTPUT DEVICE WHERE AT LEAST 1 OUTPUT IS ALWAYS SAFETY INTERLOCK

W-X-Y-Z
DDC
##
DIR
REV

DEVICE SYMBOL, CONTROLLER

DDC : DIRECT DIGITAL CONTROL
: DEVICE NUMBER
DIR : DIRECT CONTROL ACTION, OR
REV : REVERSE CONTROL ACTION

W-X-Y-Z : (SEE ABBREVIATIONS AND ACRONYMS)

GENERIC USAGE TO SHOW LOCATION OF DEVICE; PROCESS OR DEVICE BEING MEASURED OR CONTROLLED; SIGNAL TYPE; MODIFIERS AND OTHER APPLICATION INFORMATION

ACTUATOR, ELECTRIC

P

ACTUATOR, PNEUMATIC
WITH LOCALLY MOUNTED PRESSURE GAGE

P
PP
M

ACTUATOR, PNEUMATIC
WITH POSITIVE POSITIONER AND LOCALLY MOUNTED PRESSURE GAGE

AFMA

AIR FLOW MEASUREMENT ARRAY, WITH FLOW TRANSMITTER

SEE "DEVICE SYMBOL, GENERIC"

BOILER

CHILLER

C
COIL, COOLING

DX
COIL, COOLING, DIRECT-EXPANSION

HC
COIL, HEAT/COOL (DUAL TEMPERATURE)

H
COIL, HEATING

PC
COIL, PRECOOL

PH
COIL, PREHEAT

CONTACT, PRESSURE, HIGH LIMIT (HL)
SHOWN IN ACTIVATED POSITION
OPEN WHEN PRESSURE IS ABOVE SETPOINT
CLOSED WHEN PRESSURE IS BELOW SETPOINT

CONTACT, PRESSURE, HIGH LIMIT (HL)
SHOWN IN UNACTIVATED POSITION
OPEN WHEN PRESSURE IS ABOVE SETPOINT
CLOSED WHEN PRESSURE IS BELOW SETPOINT

CONTACT, PRESSURE, LOW LIMIT (LL)
SHOWN IN ACTIVATED POSITION
OPEN WHEN PRESSURE IS BELOW SETPOINT
CLOSED WHEN PRESSURE IS ABOVE SETPOINT

CONTACT, PRESSURE, LOW LIMIT (LL)
SHOWN IN UNACTIVATED POSITION
OPEN WHEN PRESSURE IS BELOW SETPOINT
CLOSED WHEN PRESSURE IS ABOVE SETPOINT

CONTACT, TEMPERATURE, HIGH LIMIT (HL)
SHOWN IN ACTIVATED POSITION
OPEN WHEN TEMPERATURE IS ABOVE SETPOINT
CLOSED WHEN TEMPERATURE IS BELOW SETPOINT

CONTACT, TEMPERATURE, HIGH LIMIT (HL)
SHOWN IN UNACTIVATED POSITION
OPEN WHEN TEMPERATURE IS ABOVE SETPOINT

CONTACT, TEMPERATURE, LOW LIMIT (LL)
SHOWN IN ACTIVATED POSITION
OPEN WHEN TEMPERATURE IS BELOW SETPOINT
CLOSED WHEN TEMPERATURE IS ABOVE SETPOINT

CONTACT, TEMPERATURE, LOW LIMIT (LL)
SHOWN IN UNACTIVATED POSITION
OPEN WHEN TEMPERATURE IS BELOW SETPOINT
CLOSED WHEN TEMPERATURE IS ABOVE SETPOINT

CONTROL SIGNAL LINE, LOW VOLTAGE

CURRENT TRANSFORMER/SWITCH

DAMPER, BALANCING

D-##
DAMPER, PARALLEL BLADE
NORMALLY OPEN OR CLOSED AS SHOWN
= DAMPER NUMBER AS SHOWN
IN DAMPER SCHEDULE

D-##
DAMPER, OPPOSED BLADE
NORMALLY OPEN OR CLOSED AS SHOWN
= DAMPER NUMBER AS SHOWN
IN DAMPER SCHEDULE

HEAT EXCHANGER

MAIN AIR
MAIN AIR

M#
MOTOR

MS-#
MOTOR STARTER

Rxx
RELAY COIL
xx = SEQUENTIAL RELAY
(SOLENOID NUMBER)

Rxx-YY
RELAY COIL CONTACT
NORMALLY OPEN
xx = RELAY COIL NUMBER
YY = CONTACT NUMBER

Rxx-YY
RELAY COIL CONTACT
NORMALLY CLOSED
xx = RELAY COIL NUMBER
YY = CONTACT NUMBER

EPS
##
ELECTRIC-TO-PNEUMATIC SWITCH
(SOLENOID ACTUATED PNEUMATIC VALVE)
= SEQUENTIAL NUMBER
(WHEN MORE THAN 1 EPS)

EP
##
ELECTRIC-TO-PNEUMATIC TRANSDUCER
VDC OR mA INPUT / 3-15 PSI OUTPUT
= SEQUENTIAL NUMBER
(WHEN MORE THAN 1 EP)

FAN

FILTER

LDP
##
LOCAL DISPLAY PANEL
= SEQUENTIAL NUMBER
(WHEN MORE THAN 1 LDP)

PP
POSITIVE POSITIONER
SEE "ACTUATOR, PNEUMATIC"

P
PRESSURE GAGE

P
H
L
PRESSURE SWITCH, DIFFERENTIAL, WITH GAGE
H = HIGH PRESSURE TAP
L = LOW PRESSURE TAP
SEE "DEVICE SYMBOL, GENERIC"

PUMP

RADIATOR

RST-BUT
RESET BUTTON FOR SAFETY RESET

SMOKE DETECTOR, DUCT-MOUNTED
SEE "DEVICE SYMBOL, GENERIC"

SWITCH, MANUAL

T
TEMPERATURE GAGE

V-##
COM
NO
NC
VALVE, 3-WAY DIVERTING
WITH SPRING RETURN FAILSAFE
NO = NORMALLY OPEN
NC = NORMALLY CLOSED
COM = COMMON PORT
= VALVE NUMBER AS SHOWN
IN VALVE SCHEDULE

V-##
NO
COM
NC
VALVE, 3-WAY MIXING
WITH SPRING RETURN FAILSAFE
NO = NORMALLY OPEN
NC = NORMALLY CLOSED
COM = COMMON PORT
= VALVE NUMBER AS SHOWN
IN VALVE SCHEDULE

VFD
XX-C
XX-SS
XX-S
VARIABLE FREQUENCY DRIVE
XX = PROCESS/DEVICE BEING CONTROLLED
SS = START/STOP COMMAND
S = STATUS FEEDBACK (ON/OFF)
C = 4-20 mA, VDC, or SNVT CONTROL SIGNAL

TEMPERATURE SENSOR, AVERAGING
or TEMPERATURE LOW LIMIT / FREEZESTAT
SEE "DEVICE SYMBOL, GENERIC"

TEMPERATURE SENSOR, POINT
SEE "DEVICE SYMBOL, GENERIC"

STAT
THERMOSTAT WITH SPECIFIED I/O FUNCTIONS

THERMOWELL IN PIPE

VALVE, BALANCING

V-##
NC
VALVE, NORMALLY CLOSED
WITH SPRING RETURN FAILSAFE
= VALVE NUMBER AS SHOWN
IN VALVE SCHEDULE

V-##
NO
VALVE, NORMALLY CLOSED
WITH SPRING RETURN FAILSAFE
= VALVE NUMBER AS SHOWN
IN VALVE SCHEDULE

GENERAL NOTES: TYPICAL ALL CONTROL DRAWINGS

1. CONTRACTOR SHALL AFFIX PERMANENT TAGS/LABELS TO ALL DEVICES AS SPECIFIED

2. CONTRACTOR SHALL LABEL ALL DDC I/O SIGNAL LINES: 4-20 mA, VDC, OR SNVT

3. CONTRACTOR SHALL SHOW A UNIQUE IDENTIFIER FOR EACH DEVICE. WHERE MULTIPLE IDENTICAL DEVICES ARE SHOWN (FOR EXAMPLE; DDC CONTROLLER, OA SENSOR,OR EP TRANSDUCER) EACH SHALL BE SEQUENTIALLY NUMBERED. WHERE SEPERATE DDC CONTROLLER BUBBLES ARE USED TO REPRESENT/SHOW A COMMON (OR SINGLE) CONTROLLER EACH BUBBLE SHALL USE THE SAME IDENTIFIER AND NUMBER. DEVICE AND SIGNAL IDENTIFIERS SHALL BE CONSISTENT BETWEEN DRAWINGS.

4. CONTRACTOR SHALL UNIQUELY NUMBER ALL ANSI 709.1 DEVICES. THIS NUMBERING SHALL BE CONSISTENT BETWEEN ALL DRAWINGS

CONTROL SCHEMATIC SYMBOLS

B
BINARY HARDWARE INPUT

A
ANALOG HARDWARE INPUT

B
BINARY HARDWARE OUTPUT

A
ANALOG HARDWARE OUTPUT

ANALOG OR BINARY SIGNAL INPUT

ANALOG OR BINARY SIGNAL OUTPUT
CONSTANT VALUE

IF
CONDITIONAL STATEMENT

IN
IN
MATH
OUT
GENERIC MATH FUNCTION AS DEFINED

IN
IN
MIN
OUT
MINIMUM SIGNAL SELECTOR

IN
IN
MAX
OUT
MAXIMUM SIGNAL SELECTOR

IN
IN
OUT
ADDITION FUNCTION

IN
IN
OUT
SUBTRACTION FUNCTION

IN
RESET
OUT
RESET SCHEDULE
(OUTPUT INCREASES AS INPUT INCREASES)

IN
RESET
OUT
RESET SCHEDULE
(OUTPUT DECREASES AS INPUT INCREASES)

IN
OUT
LOGICAL NOT FUNCTION

IN
IN
OUT
LOGICAL OR FUNCTION

IN
IN
OUT
LOGICAL AND FUNCTION

IN1
IN2
COMP
DB
OUT
DB= _ _ _
COMPARATOR WITH DEADBAND (DB).
WHEN IN1 > IN2
OUTPUT IS TRUE

IN
IN
S
LAT
R
B OUT
BINARY LATCH
S=SET
R=REST

IN
HAND
OFF
OUT
H-O-A SWITCH

IN
OCC
UNOCC
OUT
H-O-A SWITCH

CONTROL
IN
NO
IN
NC
OUT
COM
SWITCH

IN
T= _ _ _ SEC
OUT
ON DELAY TIMER
OUT=IN AFTER TIME DELAY

ENABLE
IN
VALUE
IN
SETPOINT
PID
OUT
DEFAULT OUTPUT
PID LOOP
WITH ENABLE AND DEFAULT OUTPUT
WHEN NOT ENABLED

CONTROL LOGIC DIAGRAM SYMBOLS

2P	TWO-POSITION (CONTROL SIGNAL)	I/O	INPUT/OUTPUT
ADJ	ADJUSTABLE	LDP	LOCAL DISPLAY PANEL
AFMA	AIRFLOW MEASUREMENT ARRAY	LL	LOW LIMIT
ALM	ALARM	M&C	MONITORING & CONTROL (SOFTWARE)
BA	BYPASS AIR	MA	MIXED AIR
BLDG	BUILDING	MINOA	MINIMUM OUTSIDE AIR
BUT	BUTTON	MS	MOTOR STARTER
C	COMMAND (MODULATING CONTROL SIGNAL)	MTHW	MEDIUM TEMPERATURE HOT WATER
CD	COLD DECK	N/A	NOT APPLICABLE
CHLR	CHILLER	NC	NORMALLY CLOSED
CLG	COOLING	NO	NORMALLY OPEN
CO2	CARBON DIOXIDE	OA	OUTSIDE AIR
COM	COMMON	OCC	OCCUPIED
COMP	COMPARATOR	ODT	ON DELAY TIMER
CR	CONDENSER WATER RETURN	OWS	OPERATOR WORKSTATION
CS	CONDENSER WATER SUPPLY	P	PRESSURE
CT	CURRENT TRANSFORMER/SWITCH	PC	PRE-COOLING
CWR	CHILLED WATER RETURN	PCW	PRIMARY CHILLER WATER
CWS	CHILLED WATER SUPPLY	PCWR	PRIMARY CHILLER WATER RETURN
CW	CHILLED WATER	PCWS	PRIMARY CHILLER WATER SUPPLY
D	DAMPER	PH	PREHEAT
DA	DISCHARGE AIR	PMP	PUMP
DB	DEADBAND	PP	POSITIVE POSITIONER
DDC	DIRECT DIGITAL CONTROL(LER)	R	RELAY
DIFF	DIFFERENCE	RA	RETURN AIR
DIR	DIRECT (CONTROL ACTION)	REV	REVERSE (CONTROL ACTION)
DIS	DISABLE	RF	RETURN FAN
DT	DUAL TEMP	RH	RELATIVE HUMIDITY
DTWR	DUAL TEMP WATER RETURN	RLA	RELIEF AIR
DTWS	DUAL TEMP WATER SUPPLY	RM	ROOM
DX	DIRECT EXPANSION (UNIT)	RST	RESET
EA	EXHAUST AIR	S	STATUS
ECO	ECONOMIZER	SA	SUPPLY AIR
EF	EXHAUST FAN	SEC	SECONDARY
ENA	ENABLE	SF	SUPPLY FAN
EP	ELECTRIC TO PNEUMATIC TRANSDUCER	SMK	SMOKE
EPS	ELECTRIC TO PNEUMATIC SWITCH	SP	SETPOINT
ESS	EMERGENCY SHUTOFF SWITCH	SS	START/STOP COMMAND
F	FLOW	STAT	THERMOSTAT
FAP	FIRE ALARM PANEL	SYS	SYSTEM
FLT	FILTER	SCHD	SCHEDULER
HD	HOT DECK	T	TEMPERATURE
HL	HIGH LIMIT	TAP	TAP, PRESSURE
HTG	HEATING	UNOCC	UNOCCUPIED
HTHW	HIGH TEMPERATURE HOT WATER	V	VALVE
HUM	HUMIDIFIER	VAV	VARIABLE AIR VOLUME
HW	HOT WATER	VFD	VARIABLE FREQUENCY DRIVE
HWR	HOT WATER RETURN	WB	WET BULB (TEMPERATURE)
HWS	HOT WATER SUPPLY	ZN	ZONE
HX	HEAT EXCHANGER		

ABBREVIATIONS AND ACRONYMS

US Army Corps of Engineers ®
HUNTSVILLE CENTER

SYMBOL	DESCRIPTION	DATE	BY

DESIGN BY: DESIGN
DRAWN BY: JCS
SBMT BY:
DATE: JUNE 2014
SOLICITATION NO.: N/A
CKD BY: SW
CONTRACT NO.: N/A
PLOT DATE: 6/02/2014 11:49:31 AM
CATEGORY CODE: 65% DESIGN PACKAGE
PLOT SCALE: 12" = 1'-0"
SIZE: D 22" x 34"
FILE NAME:

U.S. ARMY CORPS OF ENGINEERS
ENGINEERING AND SUPPORT CENTER, HUNTSVILLE
4820 UNIVERSITY SQ.
HUNTSVILLE, AL 35816

TRAINING SUPPORT CENTER (TSC) STANDARD DESIGN
SMALL

HVAC CONTROLS LEGEND

PLATE REFERENCE NUMBER
M-602
SHEET 43 OF 55

DDC SYSTEM - GENERAL:

1. DIRECT DIGITAL CONTROLS (DDC) SYSTEM SHALL BE PROVIDED TO OPERATE BUILDING MECHANICAL SYSTEMS AS DESCRIBED IN THE SEQUENCE OF OPERATION. ALL SOFTWARE SHALL BE LONWORKS COMPATIBLE.

2. ALL CONTROL DEVICES SHALL BE ELECTRICALLY OR ELECTRONICALLY OPERATED. PNEUMATIC CONTROL DEVICES SHALL NOT BE USED.

3. INDIVIDUAL CONTROLLERS SHALL BE PROVIDED FOR EACH PIECE OF EQUIPMENT OR SYSTEM. ALL CONTROLLERS SHALL COMMUNICATE WITH THE MASTER TEMPERATURE CONTROL PANEL. THE MASTER TEMPERATURE CONTROL PANEL SHALL BE CAPABLE OF INTERFACING WITH ALL EQUIPMENT AND SYSTEMS CONTROLLERS THROUGHOUT THE DDC SYSTEM. ALL SETPOINTS AND PARAMETERS SHALL BE ACCESSIBLE THROUGH THE MASTER TEMPERATURE CONTROL PANEL AND FRONT END TERMINAL.

4. EACH FACILITY'S BUILDING AUTOMATION SYSTEM SHALL COMMUNICATE WITH THE BASE WIDE ENERGY MANAGEMENT CONTROLS SYSTEM (EMCS). COMMUNICATION SHALL BE THROUGH A DSL ACCESS POINT AND COMMUNICATION LINE. THE DSL ACCESS POINT SHALL BE ACCESSIBLE FROM ANY OUTSIDE INTERNET CONNECTION.

5. PROVIDE EMERGENCY SHUT-DOWN SWITCHES AS SHOWN ON THE PLANS. THE SWITCH SHALL SHUT-DOWN ALL HVAC EQUIPMENT AND CLOSE ALL OUTSIDE AIR INTAKES. MANUAL RESET IS REQUIRED.

6. THE CONTROLS SYSTEM SHALL PROVIDE CONTINOUS METERING FOR THE FOLLOWING SYSTEMS AND/OR COMPONENTS. THIS MONITORING SHALL BE ACCOMPLISHED THROUGH EQUIPMENT SENSORS. AND CONTROL DEVICES. PROVIDE ADDITIONAL DEVICES AS REQUIRED TO ACCOMPLISH THIS MONITORING. THE DDC SYSTEM SHALL BE CAPABLE OF DATA LOGGING THIS INFORMATION AND REPORTING TO THE EMCS.

   A. CONSTANT AND VARIABLE MOTOR LOADS.
   B. VFD OPERATION
   C. COOLING LOADS
   D. AIR SYSTEM STATIC PRESSURE AND AIR VENTILATION VOLUMES.
   E. DOMESTIC WATER METER (METER MONITORING AND REPORTING).

SEQUENCE OF OPERATION: DOAS-1

1. GENERAL:

THE AIR HANDLING UNIT CONSISTS OF A RETURN AIR SECTION, FILTER SECTION, ACCESS SECTION, DIRECT EXPANSION COOLING COIL, AND SUPPLY FAN SECITON.

THE AIR HANDLING UNIT SHALL OPERATE AS A VARIABLE AIR VOLUME UNIT.

SUPPLY FAN SHALL BE OPERATED WITH VARIABLE FREQUENCY DRIVES. DRIVES SHALL BE FACTORY MOUNTED AND PROVIDED BY THE AIR HANDLING UNIT MANUFACTURER.

ALL CONTROL DEVICES INTEGRAL TO THE AHU OPERATION SHALL BE FACTORY INSTALLED. THIS INCLUDES ALL SENSORS, DAMPERS, ACTUATORS, AND WIRING. SYSTEM CONTROLLERS MAY BE FACTORY INSTALLED OR FIELD INSTALLED AND CONTRACTORS OPTION.

THE AHU CONTROLLER SHALL OPERATE THE AIR HANDLING UNIT IN OCCUPIED MODE, UNOCCUPIED / NIGHT SET-BACK MODE, WARM-UP MODE, AND COOL DOWN MODE.

2. SUPPLY FAN OPERATION

THE SUPPLY FAN SHALL RUN CONTINUOUSLY. THE DUCT MOUNTED SYSTEM STATIC PRESSURE SENSOR SHALL MODULATE THE SUPPLY FAN VARIABLE FREQUENCY DRIVE TO MAINTAIN SUPPLY DUCT STATIC PRESSURE AT SETPOINT (TO BE DETERMINED DURING TEST AND BALANCE).

SUPPLY FAN OPERATION SHALL BE VERIFIED THROUGH THE SUPPLY FAN MOTOR CURRENT SENSOR. IF THE SUPPLY AIR FLOW IS NOT PROVEN WITHIN 60 SECONDS (ADJUSTABLE) OF THE FAN START COMMAND, AND ALARM SIGNAL SHALL BE SENT TO THE AHU CONTROLLER TO SIGNAL THE SUPPLY FAN IS NOT OPERATIONAL.

THE SUPPLY FAN SHALL DE-ENERGIZE UPON ANY SIGNAL FROM FIRE ALARM SYSTEM OR EMERGENCY STOP SWITCH.

3. COOLING COIL OPERATION:

THE FACTORY MOUNTED CONTROLS SHALL OPERATE THE CONDENSING UNIT AND DX COOLING COIL IN SEQUENCE TO MAINTAIN SUPPLY AIR DISCHARGE TEMPERATURE AT SETPOINT.

4. FILTER MAINTENANCE:

DIFFERENTIAL PRESSURE SWITCH WITH SENSOR TAPS ON UPSTREAM AND DOWNSTREAM SIDE OF FILTER SHALL SIGNAL AHU CONTROLLER WHEN THE DIFFERENTIAL PRESSURE IS EQUAL TO OR GREATER THAN THE SET POINT. THE CONTROLLER SHALL INITIATE A MAINTENANCE ALARM SIGNAL INDICATING A DIRTY FILTER.

5. DUCT OVER-PRESSURIZATION:

THE DUCT OVER-PRESSURE SENSOR SHALL BE WIRED DIRECTLY TO THE FAN VFD. WHEN THE SENSOR SENSES A PRESSURE 120% (ADJUSTABLE) HIGHER THAN THE DUCT DESIGN PRESSURE THE FAN SHALL BE DE-ENERGIZED. AN ALARM SHALL BE SENT TO THE DDC.

6. SMOKE DETECTOR: AHU-1 ONLY

DUCT SMOKE DETECTORS SHALL STOP THE SUPPLY FAN, AND DE-ENERGIZE CONTROLS THROUGH A FIRE ALARM CONTROL CIRCUIT. WHEN SMOKE DETECTOR SENSES SMOKE, A SIGNAL SHALL BE SENT TO THE DDC CONTROLLER AND BUILDING FIRE ALARM CONTROL PANEL. THE DDC CONTROLLER SHALL DE-ENERGIZE THE SUPPLY AND ERV FAN MOTORS. MANUAL RESET OF SMOKE DETECTOR IS REQUIRED.

7. OCCUPIED MODE: AHU-1 ONLY

SEE OCCUPANCY SCHEDULE ON THIS SHEET FOR OCCUPIED MODE DAYS AND HOURS.

THE RETURN AIR DAMPER(RA-D-C) SHALL OPEN TO ITS SETPOINT POSITION (DETERMINED DURNIG TEST AND BALANCE).

THE EXHAUST AIR DAMPER(EA-D-C) AND OUTDOOR AIR DAMPER(OA-D-C) SHALL BE FULLY CLOSED DUING OCCUPIED. THESE DAMPERS SHALL ONLY OPEN WHEN IN ECONOMIZER MODE.

THE AIR HANDLING UNIT SHALL BE ENERGIZED AND RUN CONTINOUSLY DURING OCCUPIED MODE.

THE AIR HANDLING UNIT SHALL BE CONTROLLED TO MAINTAIN A SETPOINT SUPPLY AIR TEMPERATURE(SA-T) TEMPERATURE OF 55 DEGREES F(ADJUSTABLE).

8. OCCUPIED MODE: AHU-2 ONLY

SEE OCCUPANCY SCHEDULE ON THIS SHEET FOR OCCUPIED MODE DAYS AND HOURS.

THE RETURN AIR DAMPER(RA-D-C) SHALL OPEN TO ITS SETPOINT POSITION (DETERMINED DURING TEST AND BALANCE).

THE AIR HANDLING UNIT SHALL BE ENERGIZED AND RUN CONTINOUSLY DURING OCCUPIED MODE.

THE AIR HANDLING UNIT SHALL BE CONTROLLED TO MAINTAIN A SETPOINT SUPPLY AIR TEMPERATURE(SA-T) TEMPERATURE OF 55 DEGREES F(ADJUSTABLE).

9. UNOCCUPIED /NIGHT SET-BACK MODE:

SEE OCCUPANCY SCHEDULE ON THIS SHEET FOR UN-OCCUPIED/NIGHT SET BACK DAYS AND HOURS.

THE AIR HANDLING UNIT SHALL BE CONTROLLED TO MAINTAIN A SETPOINT SUPPLY AIR TEMPERATURE(SA-T) TEMPERATURE OF 65 DEGREES F(ADJUSTABLE).

THE AHU CONTROLLER SHALL OVERRIDE ALL ZONE THERMOSTATS TO THE NIGHT SETBACK SPACE TEMPERATURE SETPOINT OF 85 DEGREES F(ADJUSTABLE) FOR COOLING AND 55 DEGREES F(ADJUSTABLE) FOR HEATING. ZONE VAV TERMINAL BOXES SHALL OPERATE AS NORMAL TO SATISFY THE NIGHT SETBACK SPACE TEMPERATURE SETPOINT.

AHU-1 ONLY: DURING THIS MODE THE OUTSIDE AIR AND EXHAUST AIR DAMPER SHALL BE FULLY CLOSED AND THE DEDICATED OUTDOOR AIR UNIT(DOAS-1) SHALL BE OFF. THE RETURN AIR DAMPER FOR SHALL BE 100% FULLY OPEN TO THE AIR HANDLING UNIT.

10. WARM UP MODE:

SEE OCCUPANCY SCHEDULE ON THIS SHEET FOR WARM UP DAYS AND HOURS.

THE AHU CONTROLLER SHALL RELEASE THE NIGHT SET-BACK OVERRIDE OF ALL ZONE THERMOSTATS WHEN THE WARM-UP SCHEDULED TIME IS REACHED.

THE HOT WATER CONTROL VALVE AT EACH VAV BOX SHALL MODULATE IN SEQUENCE TO MAINTAIN A 70 DEGREE F(ADJUSTABLE) ROOM TEMPERATURE. THE CHILLED WATER CONTROL VALVE(V-1) SHALL BE IN THE CLOSED POSITION.

WHEN THE OCCUPIED SCHEDULE TIME IS REACHED THE ZONE VAV TERMINAL UNITS SHALL THEN OPERATE AS REQUIRED IN OCCUPIED MODE.

AHU-1 ONLY: DURING THIS MODE THE OUTSIDE AIR AND EXHAUST AIR DAMPER SHALL BE FULLY CLOSED AND THE DEDICATED OUTDOOR AIR UNIT(DOAS-1) SHALL BE OFF. THE RETURN AIR DAMPER SHALL BE 100% FULLY OPEN TO THE AIR HANDLING UNIT.

11. COOL-DOWN MODE:

SEE OCCUPANCY SCHEDULE ON THIS SHEET FOR WARM UP DAYS AND HOURS.

THE AHU CONTROLLER SHALL RELEASE THE NIGHT SET-BACK OVERRIDE OF ALL ZONE THERMOSTATS WHEN THE COOL-DOWN SCHEDULED TIME IS REACHED.

THE DAMPER IN THE VAV BOX AT EACH ZONE SHALL MODULATE IN SEQUENCE TO MAINTAIN A 78 DEGREE F(ADJUSTABLE) ROOM TEMPERATURE.

THE AIR HANDLING UNIT SHALL BE CONTROLLED TO MAINTAIN A SUPPLY AIR TEMPERATURE(SA-T) OF 55 DEGREES F(ADJUSTABLE).

WHEN THE OCCUPIED SCHEDULE TIME IS REACHED THE ZONE VAV TERMINAL UNITS SHALL THEN OPERATE AS REQUIRED IN OCCUPIED MODE.

AHU-1 ONLY: DURING THIS MODE THE OUTSIDE AIR AND EXHAUST AIR DAMPER SHALL BE FULLY CLOSED AND THE DEDICATED OUTDOOR AIR UNIT(DOAS-1) SHALL BE OFF. THE RETURN AIR DAMPER SHALL BE 100% FULLY OPEN TO THE AIR HANDLING UNIT.

12. ECONOMIZER MODE: AHU-1 ONLY:

WHENEVER THE OUTSIDE AIR DRY BULB TEMPERATURE FALLS BELOW 50 DEGREES F(ADJUSTABLE) FOR 15 MINUTES OR LONGER(ADJUSTABLE) THE OUTSIDE AIR DAMPER(OA-D-C) AND EXHAUST AIR DAMPER(EA-D-C) SHALL OPEN. THE OUTSIDE AIR AND RETURN AIR DAMPERS SHALL MODULATE IN SEQUENCE TO MAINTIAN A DISCHARGE SUPPLY AIR TEMPERATURE OF 54 DEGREES F.

THE RELIEF FAN VARIABLE FREQUENCY DRIVE SHALL TRACK THE SUPPLY FAN TO MAINTAIN A POSITIVE PRESSURE IN THE SPACES SERVED BY AHU-1.

WHEN THE OUTDOOR AIR RISES ABOVE 53 DEGREES(ADJUSTABLE) FOR 15 MINUTES(ADJUSTABLE) OR LONGER THE EXHAUST AND OUTSIDE AIR DAMPERS SHALL RETURN TO THEIR OCCUPIED MODE SETPOINT POSITIONS AND THE UNIT SHALL OPERATE AS REQUIRED IN OCCUPIED MODE.

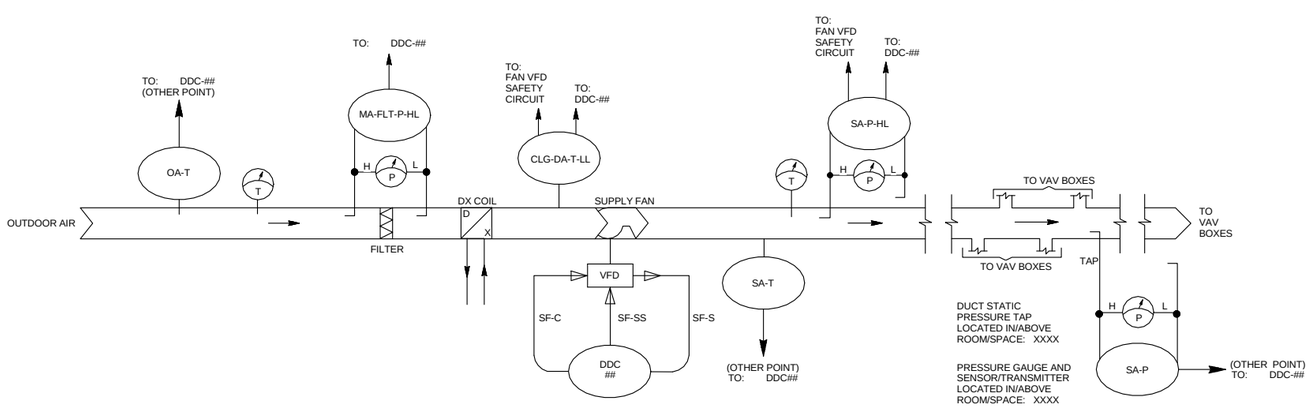

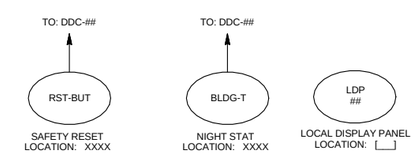

DEDICATED OUTDOOR AIR UNIT SCHEMATIC: DOAS-1

SCALE: 12" = 1'-0"

US Army Corps of Engineers ®
HUNTSVILLE CENTER

SYMBOL	DESCRIPTION	DATE	BY

DESIGN BY: JCS
DRAWN BY: JCS
SBMT BY:
DATE: 1 JAN 2014
SOLICITATION NO.: N/A
CXD BY: SW
CONTRACT NO.: N/A
PLOT DATE: 6/2/2014 11:49:34 AM
CATEGORY CODE: 65% DESIGN PACKAGE
PLOT SCALE: 12" = 1'-0"
SIZE: 22" X 34"
FILE NAME:

U.S. ARMY CORPS OF ENGINEERS
ENGINEERING AND SUPPORT CENTER, HUNTSVILLE
4820 UNIVERSITY SQ.
HUNTSVILLE, AL 35816

TRAINING SUPPORT CENTER (TSC)
STANDARD DESIGN
SMALL

CONTROLS SCHEMATIC AND SEQUENCE

PLATE REFERENCE NUMBER
M-603
SHEET 44 OF 55

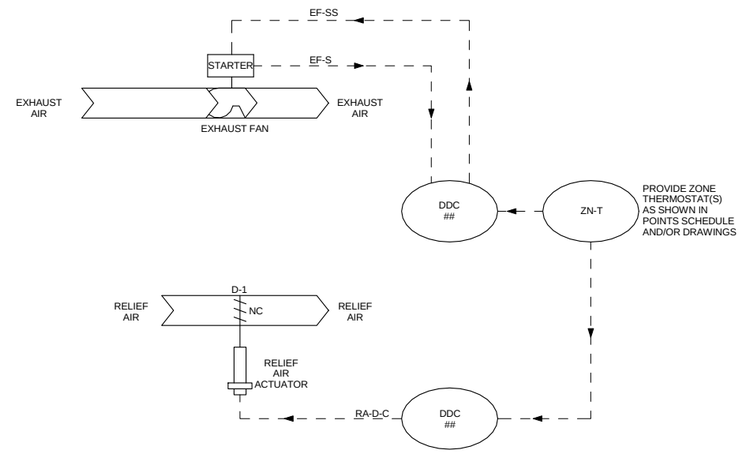

EXHAUST FAN SCHEMATIC

NOT TO SCALE

SEQUENCE OF OPERATION: EF-1, 2

1. EXHUAST FAN OPERATION:

A WALL MOUNTED THERMOSTAT(ZN-T) SHALL CONTROL THE EXHAUST FAN TO MAINTAIN A 10 DEGREE F DIFFERENCE BETWEEN ZONE TEMPERATURE AND OUTDOOR TEMPERATURE.

THE INTAKE RELIEF DAMPER SHALL BE INTERLOCKED WITH THE EXHAUST FAN STARTER.

WHEN THE SPACE TEMPERATURE RISES ABOVE 80 DEGREE F(ADJUSTABLE) THE EXHAUST FAN SHALL BE ENERGIZED AND THE RELIEF DAMPER SHALL FULLY OPEN TO MAINTAIN THE ZONE TEMPERATURE DIFFERENCE.

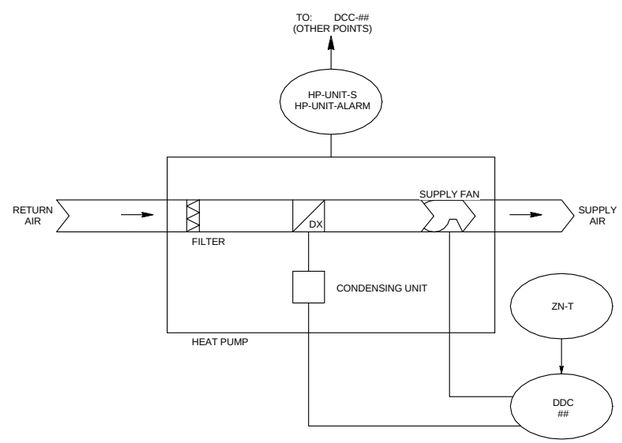

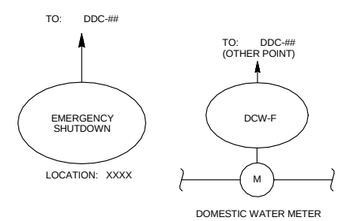

HEAT PUMP CONTROLS SCHEMATIC

SCALE: 12" = 1'-0"

SEQUENCE OF OPERATION:

1. AC/HEAT PUMP OPERATION:

ALL CONTROL DEVICES INTEGRAL TO THE UNIT OPERATION SHALL BE FACTORY INSTALLED. THIS INCLUDES ALL SENSORS, DAMPERS, ACTUATORS, AND WIRING. ALL UNIT CONTROLLERS, HARDWARE, AND SOFTWARE SHALL BE A PACKAGED STAND-ALONE SYSTEM.

AIR HANDLING UNIT AND HEAT PUMP SHALL OPERATE IN SQUENCE TO MAINTAIN THE SPACE TEMPERATURE SETPOINT.

UNIT CONTROLLER SHALL HAVE AVAILABLE OUTPUT CONTACTS FOR CONNECTION TO DDC TEMPERATURE CONTROL SYSTEM TO ALARM FOR FAILURE OF UNIT, TEMPERATURE OUTSIDE RANGE.

THE BUILDING TEMPERATURE CONTROLS SYSTEM SHALL MONITOR ON/OFF STATUS OF EQUIPMENT AND ALL ALARMS.

2. ALARMS:

ALL ALARMS SHALL BE SENT TO THE USER INTERFACE/BUILDING MANAGEMENT SYSTEM IF THE FOLLOWING CONDITIONS OCCUR:

A. THE ZONE TEMPERATURE(ZN-T) FALLS BELOW 45 DEGREES F(ADJUSTABLE) FOR 5 MINUTES(ADJUSTABLE) OR LONGER.
B. THE ZONE TEMPERATURE (ZN-T) RISES ABOUT 85 DEGREES F(ADJUSTABLE) FOR 5 MINUTES OR LONGER.

US Army Corps of Engineers ®
HUNTSVILLE CENTER

SYMBOL	DESCRIPTION	DATE	BY

DESIGN BY: DES. CHIEF
DATE: JUNE 2014
SOLICITATION NO.: N/A
DRAWN BY: JCS
CKD BY: SW
CONTRACT NO.: N/A
SBMT BY:
PLOT DATE: 6/3/2014 11:49:36 AM
CATEGORY CODE: 65% DESIGN PACKAGE
PLOT SCALE: 12" = 1'-0"
FILE NAME:
SIZE: D 22" x 34"

U.S. ARMY CORPS OF ENGINEERS
ENGINEERING AND SUPPORT CENTER, HUNTSVILLE
4820 UNIVERSITY SQ.
HUNTSVILLE, AL 35816

TRAINING SUPPORT CENTER (TSC)
STANDARD DESIGN
SMALL

CONTROLS SCHEMATIC AND SEQUENCE

PLATE REFERENCE NUMBER
M-604

ELECTRICAL LEGEND

a A2 — LOWER CASE DENOTES THE SWITCH THAT CONTROLS FIXTURE
LUMINAIRE TYPE DESIGNATION
SYMBOL DENOTES GENERAL TYPE OF LUMINAIRE

COMPACT FLUORESCENT, LED OR HID LIGHTING FIXTURE, CEILING OR PENDENT MOUNTED AS INDICATED (EMERGENCY BATTERY BALLAST SYMBOL AS WELL)

LED WALL MOUNTED EXTERIOR LIGHT FIXTURE (EMERGENCY SYMBOL AS WELL)

FLUORESCENT LIGHTING FIXTURE

FLUORESCENT LIGHTING FIXTURE WITH INTEGRAL EMERGENCY BATTERY BALLAST

FLUORESCENT LIGHTING FIXTURE

FLUORESCENT LIGHTING FIXTURE

FLUORESCENT LIGHTING FIXTURE WITH INTEGRAL EMERGENCY BATTERY BALLAST

EXIT LIGHT, CEILING MOUNTED, SHADING INDICATES FACES DIRECTIONAL ARROWS WHERE INDICATED

EXIT LIGHT, WALL MOUNTED, SHADING INDICATES FACES, DIRECTIONAL ARROWS WHERE INDICATED. MOUNT BOTTOM OF FIXTURE 6" ABOVE TOP OF DOOR UNLESS OTHERWISE NOTED

$ — WALL SWITCH. WHERE NO SUBSCRIPT PRESENT, SINGLE POLE 20A SWITCH. WHERE SUBSCRIPT IS PRESENT, SUBSCRIPT DENOTES THE FOLLOWING:

3 - THREE WAY SWITCH, (LINE VOLTAGE, 20A)
4 - FOUR WAY SWITCH, (LINE VOLTAGE, 20A)
a - SINGLE LOWER CASE LETTER (EXCEPT LETTERS 'd' AND 'm') DENOTES THE SWITCH THAT CONTROLS THE FIXTURES (LINE VOLTAGE, 20A)
D - DIMMING SWITCH
3D - THREE WAY DIMMING SWITCH
WP - WEATHERPROOF (GASKETED)
T - TIME SWITCH WITH MANUAL "ON", TIMED "OFF", OPERATION AND MANUAL "OFF" OVERRIDE.
M - MOTOR RATED SWITCH

20 AMP DUPLEX RECEPTACLE, SUBSCRIPTS DENOTE THE FOLLOWING:

1 - ABOVE COUNTER
2 - UNDER COUNTER-REFRIGERATOR, PROVIDE GROUND FAULT CIRCUIT INTERRUPTER PROTECTION FROM LOAD SIDE OF GFI MOUNTED ABOVE COUNTER
3 - WEATHER PROOF, WET LOCATION, UOI
GFI - GROUND FAULT CIRCUIT INTERRUPTER
4 - FOR ELECTRIC WATER COOLER. COORDINATE MOUNTING WITH EQUIPMENT PROVIDED AND FEED POWER FROM GFI CIRCUIT BREAKER
5 - FOR TELEVISION. COORDINATE MOUNTING WITH TV OUTLET
AC - EST SUBSYSTEM AIR COMPRESSOR

20 AMP QUAD RECEPTACLE, MH 1'-6", UON OR UOI. SUBSCRIPTS DENOTE SAME AS ABOVE FOR DUPLEX.

C — 20 AMP CEILING MOUNTED RECEPTACLE OUTLET

V — VGA CEILING OUTLET FOR CONNECTING THE USER'S PROJECTOR

R T — RECESSED COMBINATION FLOOR DUPLEX RECEPTACLE (20 AMP) AND DUPLEX TELEPHONE OUTLET

J — JUNCTION BOX, WALL MTD. MH 1'-6" U.O.N.

MOTOR DISCONNECT/SAFETY SWITCH SHALL BE RATED 30/3/NF/1 UNLESS OTHERWISE INDICATED.

'30' DENOTES SWITCH AMPERE RATING;
'3' DENOTES NUMBER OF POLES;
'NF' DENOTES NON-FUSED ('F' DENOTES FUSED);
'1' DENOTES SWITCH ENCLOSURE'S RATING;
FUSE RATING SHALL BE IN ACCORDANCE WITH MANUFACTURER'S RECOMMENDATIONS.

MOTOR STARTER, FURNISHED BY OTHER SECTIONS UON/UOI

ES — EMERGENCY SHUT-OFF

TBB — TELEPHONE BACK BOARD.

GENERAL NOTES

1. SEE PLATE G-002 TO G-002A FOR GENERAL ABBREVIATIONS AND GENERAL LEGEND.

2. MOUNTING HEIGHT, UNLESS OTHERWISE NOTED, IS TO CENTER LINE OF EQUIPMENT.

3. MOUNT OUTLET BOXES SO THAT NONE OCCUR BACK TO BACK IN WALLS.

4. COORDINATE THE LOCATIONS AND MOUNTING HEIGHTS OF LIGHTING FIXTURES IN MECHANICAL AND ELECTRICAL ROOMS WITH THE FINAL LOCATIONS OF PIPES, DUCTS AND OTHER EQUIPMENT FOR BEST ARRANGEMENT. FIXTURES SHALL BE EASILY ACCESSIBLE FOR RELAMPING.

5. ALL WIRING SHALL BE CONCEALED UNLESS EXPLICITLY INDICATED OTHERWISE. CONDUITS SHALL NOT BE RUN IN ANY UL RATED SLAB.

6. PROVIDE NAMEPLATES ON THE EXTERIOR OF ALL ELECTRICAL PANELS AND ENCLOSURES AS FOLLOWS: DEVICE ID, DEVICE RATING, POWER SOURCE, ARC FAULT DATA.

7. FOR DISCONNECT SWITCHES AND MOTOR STARTERS THE TOP LINE SHALL BE THE NAME/DESIGNATIONOF THE EQUIPMENT BEING FED BY THE SWITCH/STARTER.

8. PROVIDE SEPARATE NEUTRALS FOR EACH CIRCUIT UTILIZING A NEUTRAL CONDUCTOR (DO NOT COMBINE NEUTRALS).

9. PROVIDE GROUNDING CONDUCTORS IN ALL CONDUITS.

10. UNLESS OTHERWISE NOTED, RECEPTACLES THAT HAVE GFI PROTECTION ARE TO BE WIRED SUCH THAT THE LOSS OF POWER ON ONE RECEPTACLE DOES NOT AFFECT DOWNSTREAM RECEPTACLES.

11. FOR THE WAREHOUSE (ROOM 120,) LIGHTING AND CONTROLS ARE NOT SHOWN. IIGHTING SHOULD FOLLOW IESNA REQUIREMENTS TO THE WAREHOUSE FOR THE GENERAL AREA AND FOR LABELS-SMALL IN DESIGNATED AREAS. DESIGN SHALL COORDINATE WITH LAYOUT OF RACKS NOT SHOWN.

ABBREVIATIONS

A	AMPERS
AFF	ABOVE FINISHED FLOOR
C	CONDUIT
CATV	CABLE TELEVISION
CB	CIRCUIT BREAKER
CKT	CIRCUIT
COR	CONTRACTING OFFICER'S REPRESENTATIVE
CU	COPPER
EF	EXHAUST FAN
ELU	EMERGENCY LIGHT UNIT
EWC	ELECTRIC WATER COOLER
FACP	FIRE ALARM CONTROL PANEL
GFCI	GOVERNMENT FURNISHED, CONTRACTOR INSTALLED
G	GROUND
GFI	GROUND FAULT INTERRUPTER
GFP	GROUND FAULT INTERRUPTER
GND	GROUND
HACR	HEATING AND AIR CONDITIONING REFRIGERATION
HP	HORSEPOWER
HZ	HERTZ
IDS	INTRUSION DETECTION SYSTEM
IMC	INTERMEDIATE METAL CONDUIT
KWH	KILOWATT HOUR
LED	LIGHT EMITTING DIODE
LT	LIGHT
LVS	LOW VOLTAGE SWITCH
MCB	MOLDED CASE BREAKER
MD	MOUNTING DISTANCE
MFR	MANUFACTURER
MH	MOUNTING HEIGHT
MLO	MAIN LUGS ONLY
MNS	MASS NOTIFICATION SYSTEM
MTD	MOUNTED
NEC	NATIONAL ELECTRICAL CODE
NF	NON FUSED
NO	NUMBER
NTS	NOT TO SCALE
OS	OCCUPANCY SENSOR
PAF	PAINTED AFTER FABRICATION
PH	PHASE
PIR	PASSIVE INFRARED
R/W	RACEWAY
SER	SERVICE ENTRANCE RATED
SPD	SURGE PROTECTIVE DEVICE
TR	TRANSFORMER
TVSS	TRANSIENT VOLTAGE SURGE SUPPRESSOR
TYP	TYPICAL
UL	UNDERWRITERS LABORATORY
UOI	UNLESS OTHERWISE INDICATED
UON	UNLESS OTHERWISE NOTED
V	VOLT
VT	VARIABLE AIR VOLUME TERMINAL UNIT
W, WP	WEATHERPROOF

US Army Corps of Engineers ®
HUNTSVILLE CENTER

SYMBOL	DESCRIPTION	DATE	BY

DESIGN BY: EEJ | DATE: JUNE 2014
DRAWN BY: EJJ | CKD BY: | SOLICITATION NO.: N/A
SBMT BY: | PLOT DATE: 6/3/2014 11:50:46 AM | CONTRACT NO.: N/A
PLOT SCALE: 12" = 1'-0" | CATEGORY CODE: 65% DESIGN PACKAGE
SIZE: D 22" x 34" | FILE NAME:

U.S. ARMY CORPS OF ENGINEERS
ENGINEERING AND SUPPORT CENTER, HUNTSVILLE
4820 UNIVERSITY SQ.
HUNTSVILLE, AL 35816

TRAINING SUPPORT CENTER (TSC)
STANDARD DESIGN
SMALL

LEGEND AND NOTES

PLATE REFERENCE NUMBER
E-001

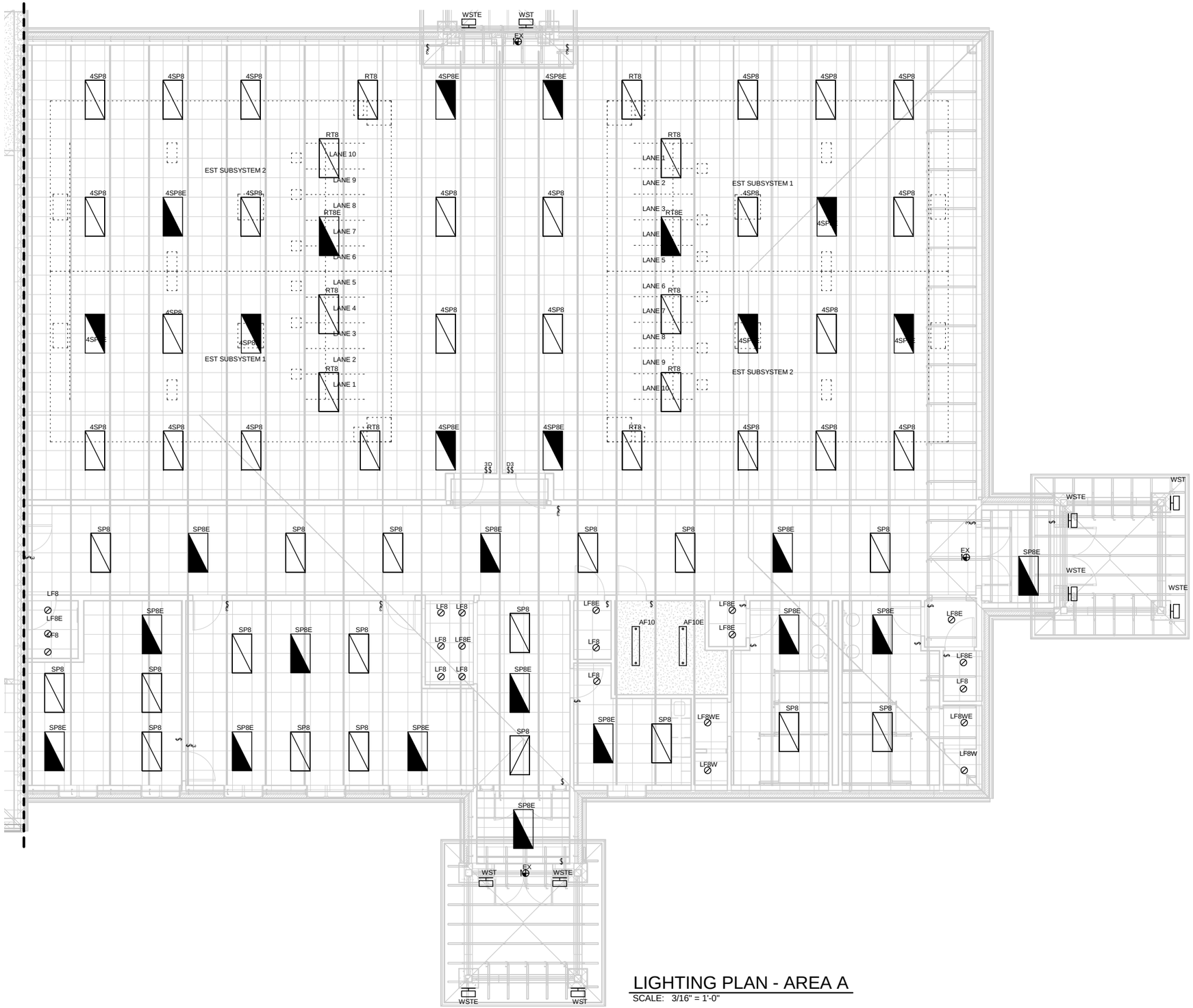

LIGHTING PLAN - AREA A

SCALE: 3/16" = 1'-0"

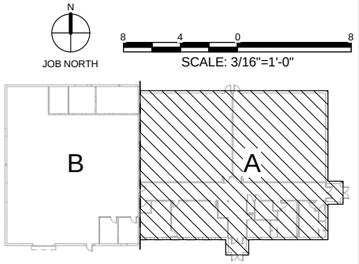

US Army Corps of Engineers ®
HUNTSVILLE CENTER

SYMBOL	DESCRIPTION	DATE	BY

DESIGN BY: ELJ
DRAWN BY: ELJ
SBMT BY:
CKD BY:
PLOT SCALE: As indicated
PLOT DATE: 6/3/2014 11:50:52 AM
DATE: JUNE 2014
SOLICITATION NO.: N/A
CONTRACT NO.: N/A
CATEGORY CODE: 65% DESIGN PACKAGE
SIZE: 22" x 34"
FILE NAME:

U.S. ARMY CORPS OF ENGINEERS
ENGINEERING AND SUPPORT CENTER, HUNTSVILLE
4820 UNIVERSITY SQ.
HUNTSVILLE, AL 35816

TRAINING SUPPORT CENTER (TSC)
STANDARD DESIGN
SMALL

LIGHTING PLAN - AREA A

PLATE REFERENCE NUMBER
EL101
SHEET 47 OF 55

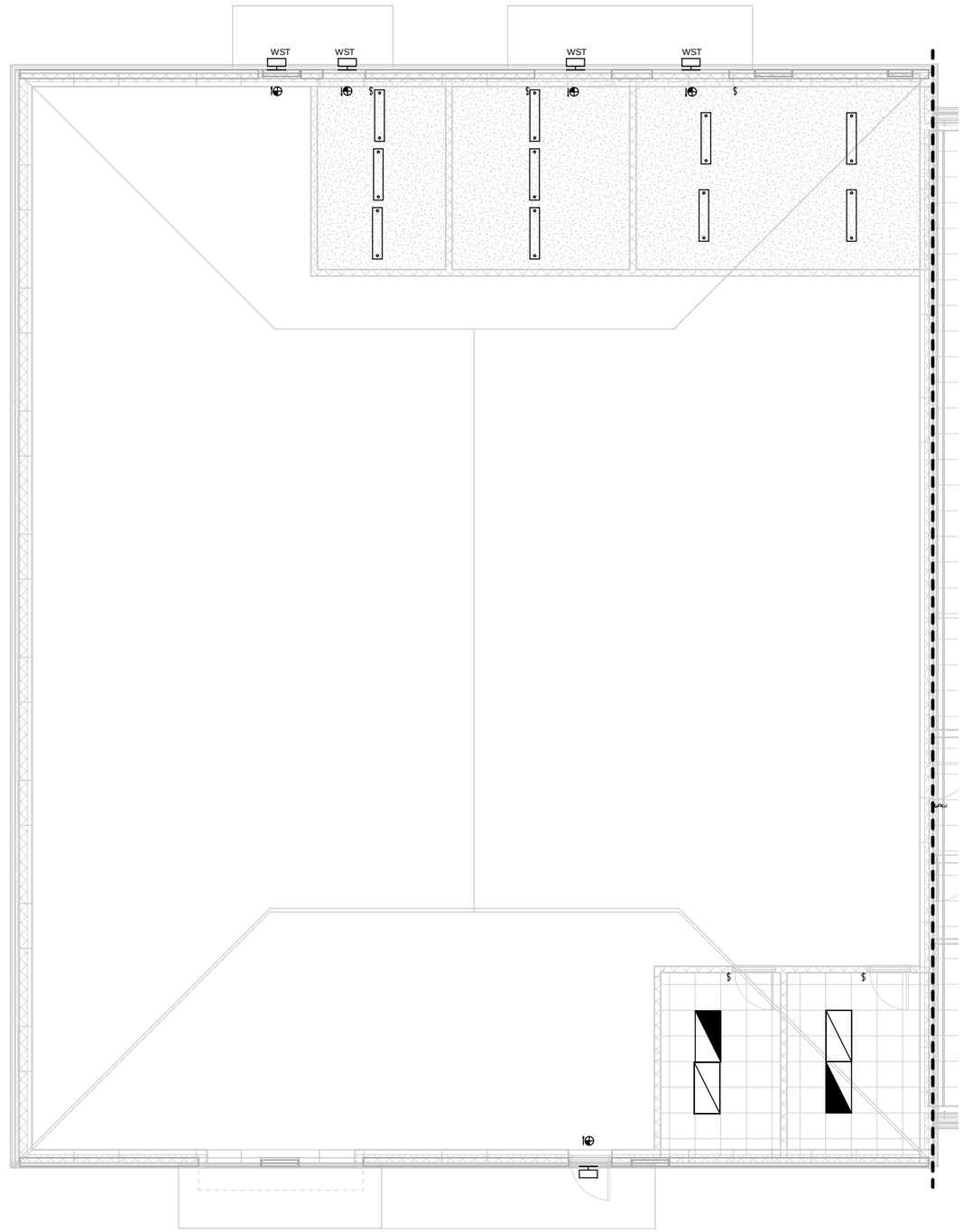

LIGHTING PLAN - AREA B

SCALE: 3/16" = 1'-0"

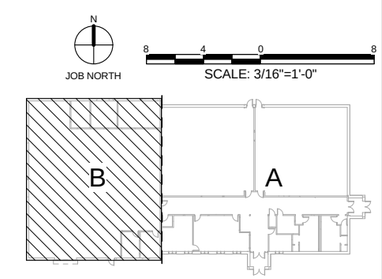

US Army Corps of Engineers ®
HUNTSVILLE CENTER

SYMBOL	DESCRIPTION	DATE	BY

DESIGN BY: EEJ
DRAWN BY: EEJ
SBMT BY:
CKD BY:
PLOT DATE: 6/2/2014 11:50:55 AM
PLOT SCALE: As indicated
SIZE D 22" x 34"
DATE: JUNE 2014
SOLICITATION NO.: N/A
CONTRACT NO.: N/A
CATEGORY CODE: 65% DESIGN PACKAGE
FILE NAME:

U.S. ARMY CORPS OF ENGINEERS
ENGINEERING AND SUPPORT CENTER, HUNTSVILLE
4820 UNIVERSITY SQ.
HUNTSVILLE, AL 35816

TRAINING SUPPORT CENTER (TSC) STANDARD DESIGN
SMALL

LIGHTING PLAN - AREA B

PLATE REFERENCE NUMBER
EL102
SHEET 48 OF 55

LUMINAIRE SCHEDULE

TYPE MARK	LAMP	LAMP NUMBER	LAMP WATTS	VOLTAGE	CCT	CU	REMARKS	Count
								1
4SP8	T8							22
4SP8E	T8						EMERG 1100 LUMEN CU AT RCR=2/80-50-20	10
AF10	T8						CU AT RCR=2/80-50-20	8
AF10E	T8						EMERG 1100 LUMEN CU AT RCR=2/80-50-20	4
EX	LED					1		8
LF8								10
LF8E								7
LF8W								2
LF8WE								2
RT8								10
RT8E	T8						EMERG 1100 LUMEN CU AT RCR=2/80-50-20	2
SP8	T8		32 W		4100 K		CU AT RCR=2/80-50-20	20
SP8E	T8						EMERG 1100 LUMEN CU AT RCR=2/80-50-20	16
WST	LED						TYPE III DIST, CU=MIN LUMEN MAINT FACTOR AT 100,000 HRS	10
WSTE	LED						TYPE III DIST EMERG, CU=MIN LUMEN MAINT FACTOR AT 100,000 HRS	7

US Army Corps of Engineers ®
HUNTSVILLE CENTER

SYMBOL	DESCRIPTION	DATE	BY

U.S. ARMY CORPS OF ENGINEERS
ENGINEERING AND SUPPORT CENTER, HUNTSVILLE
4820 UNIVERSITY SQ.
HUNTSVILLE, AL 35816

DESIGN BY: EBA
DRAWN BY: EJJ
CKD BY:
SBMT BY:
DATE: JUNE 2014
SOLICITATION NO.: N/A
CONTRACT NO.: N/A
PLOT DATE: 6/3/2014 11:50:56 AM
CATEGORY CODE: 635% DESIGN PACKAGE
PLOT SCALE:
SIZE: D 22" X 34"
FILE NAME:

TRAINING SUPPORT CENTER (TSC)
STANDARD DESIGN
SMALL

LIGHT FIXTURE SCHEDULE AND DETAILS

PLATE REFERENCE NUMBER
EL501

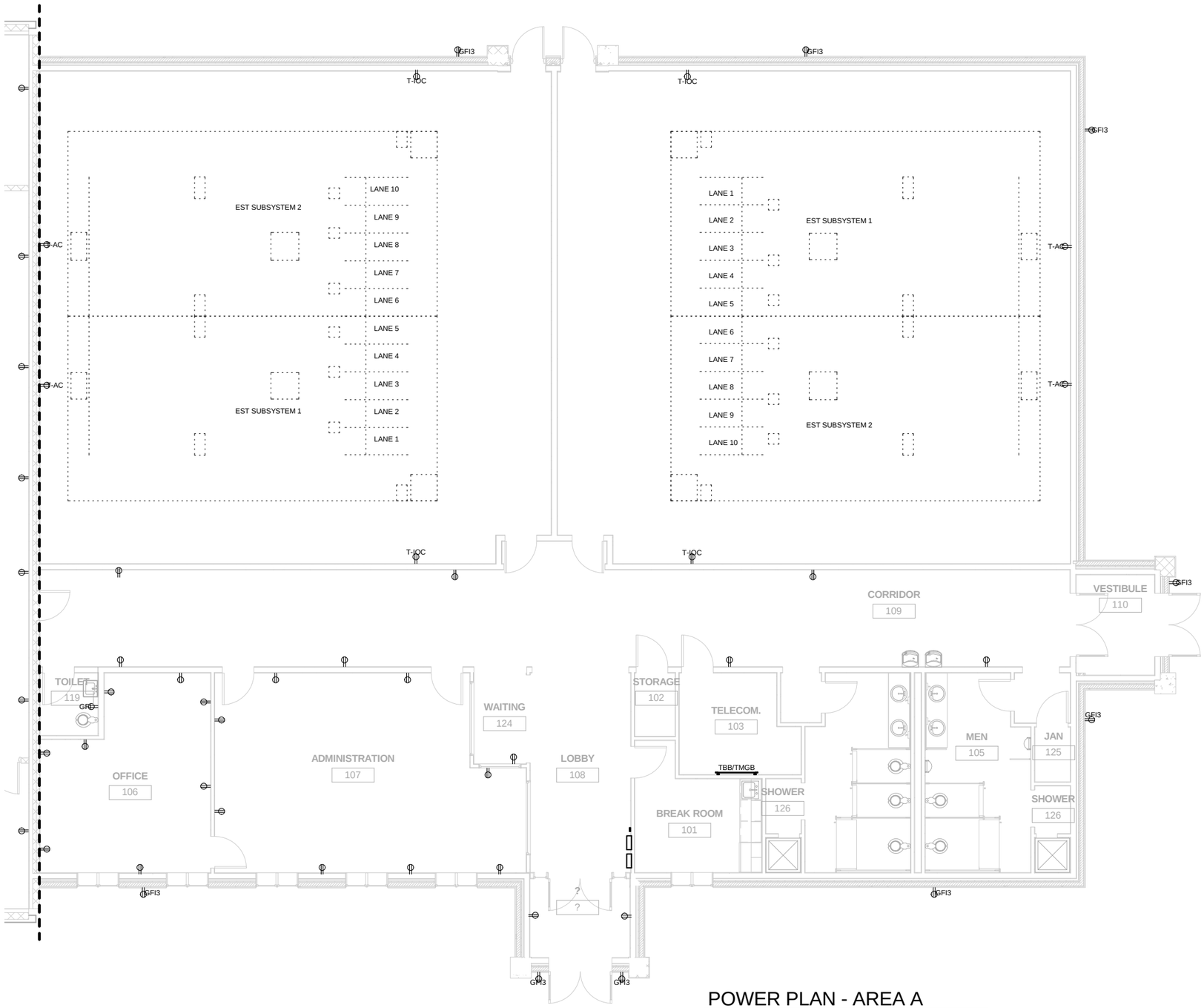

POWER PLAN - AREA A

SCALE: 3/16" = 1'-0"

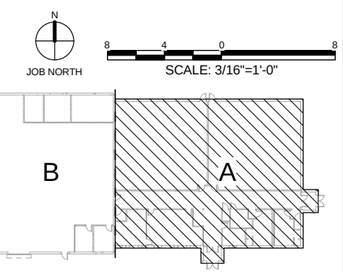

US Army Corps of Engineers ®
HUNTSVILLE CENTER

SYMBOL	DESCRIPTION	DATE	BY

DESIGN BY: EJ3
DRAWN BY: EJ3
SBMT BY:
CKD BY:
PLOT DATE: 6/2/2014 11:50:59 AM
PLOT SCALE: As indicated
SIZE: D 22 X 34
FILE NAME:
DATE: 1 JAN 2014
SOLICITATION NO.: N/A
CONTRACT NO.: N/A
CATEGORY CODE: 165% DESIGN PACKAGE

U.S. ARMY CORPS OF ENGINEERS
ENGINEERING AND SUPPORT CENTER, HUNTSVILLE
4820 UNIVERSITY SQ.
HUNTSVILLE, AL 35816

TRAINING SUPPORT CENTER (TSC)
STANDARD DESIGN
SMALL

POWER PLAN - AREA A

PLATE REFERENCE NUMBER
EP101
SHEET 50 OF 55

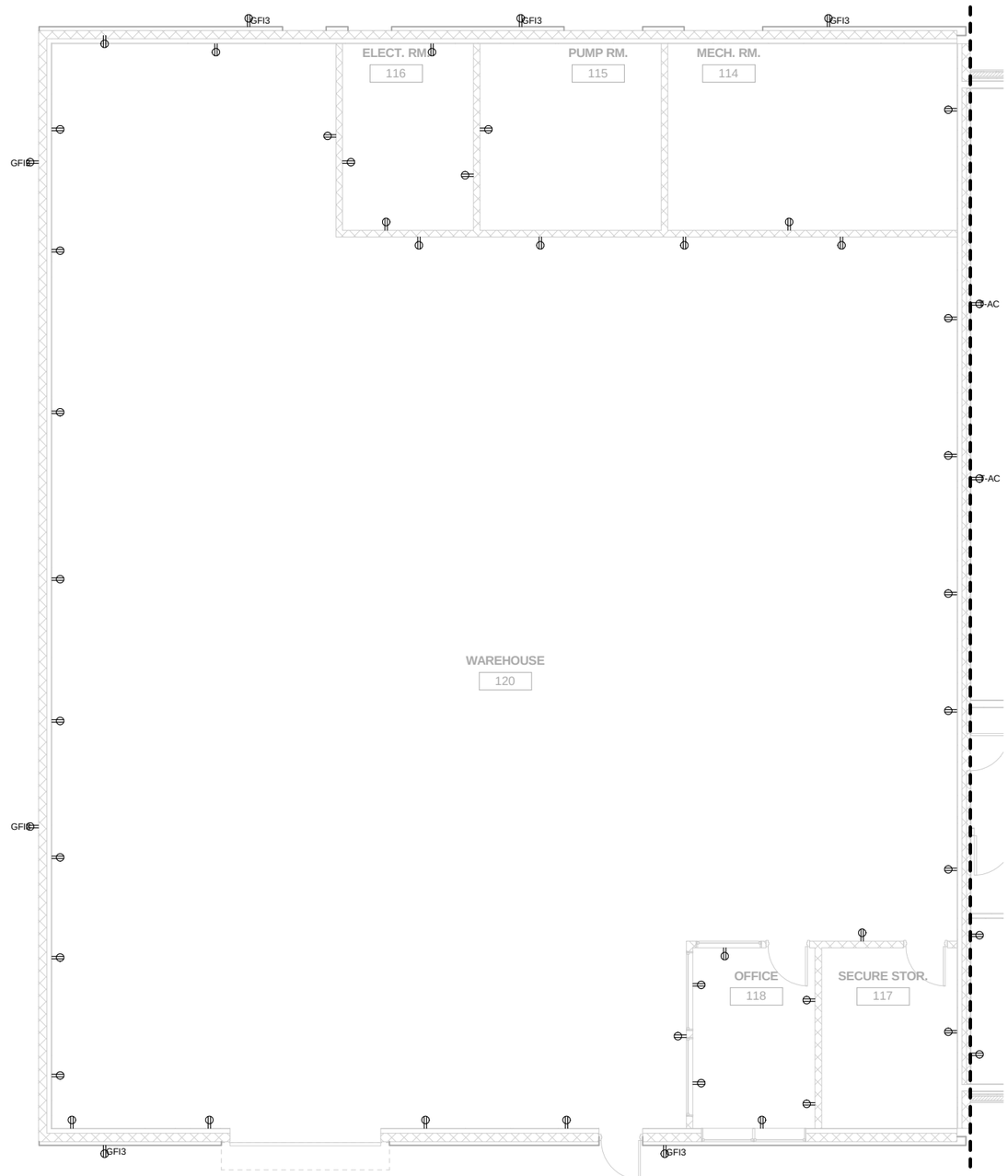

POWER PLAN - AREA B

SCALE: 3/16" = 1'-0"

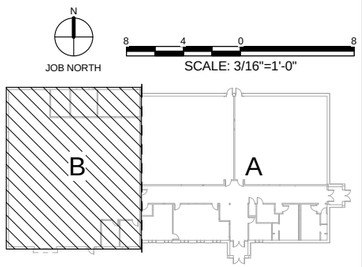

US Army Corps of Engineers ®
HUNTSVILLE CENTER

SYMBOL	DESCRIPTION	DATE	BY

DESIGN BY: EEJ
DRAWN BY: EJJ
CKD BY:
SBMT BY:
DATE: JUNE 2014
SOLICITATION NO.: N/A
CONTRACT NO.: N/A
PLOT DATE: 6/3/2014 1:15:01 AM
CATEGORY CODE: 65% DESIGN PACKAGE
PLOT SCALE: As indicated
SIZE: 22" X 34"
FILE NAME:

U.S. ARMY CORPS OF ENGINEERS
ENGINEERING AND SUPPORT CENTER, HUNTSVILLE
4820 UNIVERSITY SQ.
HUNTSVILLE, AL 35816

TRAINING SUPPORT CENTER (TSC)
STANDARD DESIGN
SMALL

POWER PLAN - AREA B

PLATE REFERENCE NUMBER
EP102

SIGNAL LEGEND

- WP — RJ-45 TELEPHONE WALL OUTLET WITH WEATHERPROOF COVER.
- P — SINGLE GANG RJ-45 WALL OUTLET (WITHOUT SUBSCRIPT) UOI. SUBSCRIPT INDICATES
  - D - DOUBLE GANG RJ-45 WALL OUTLET
  - P - NETWORK PRINTER/FAX.
- W — RJ-45 TELEPHONE WALL OUTLET.
- VGA WALL OUTLET FOR CONNECTING THE USER LAPTOP AND PROJECTOR.
- C — CEILING MOUNTED RECEPTACLE.
- V — CEILING MOUNTED VGA OUTLET.
- TV — SINGLE CABLE TELEVISION OUTLET.
- TTB CTB — FIRE-RETARDANT PLYWOOD BACKBOARD WITH NO ADDED UREA FORMALDEHYDE. SEE SPECIFICATIONS FOR FSC CERTIFICATION REQUIREMENTS.
- TER — TELECOMMUNICATIONS EQUIPMENT RACK. FLOOR MOUNTED.
- CABLE TRAY, SEE RISER FOR TYPES
- TMGB — TELECOMMUNICATIONS MAIN GROUND BAR, MH 18" A.F.F.
- TGB — TELECOMMUNICATIONS GROUND BAR, MH 18" A.F.F.
- CGB — CABLE TV GROUND BAR, MH 18" A.F.F.
- C — BALANCE MAGNETIC DOOR CONTACT SWITCHES. (GFGI) COORDINATE MOUNTING HEIGHT WITH DOOR
- MS — MOTION SENSOR (GFGI).
- PIR — PASSIVE INFRARED SENSOR (GFGI)
- KP — KEY PAD (GFGI)
- RADC — REMOTE AREA DATA COLLECTOR (GFGI)
- R T — RECESSED COMBINATION FLOOR BOX WITH DUPLEX RECEPTACLE AND DUPLEX TELEPHONE OUTLET UON.
- J — JUNCTION BOX, WALL MTD. MH 1'-6" U.O.N.
- J — JUNCTION BOX

COMMUNICATION LABELING SCHEME

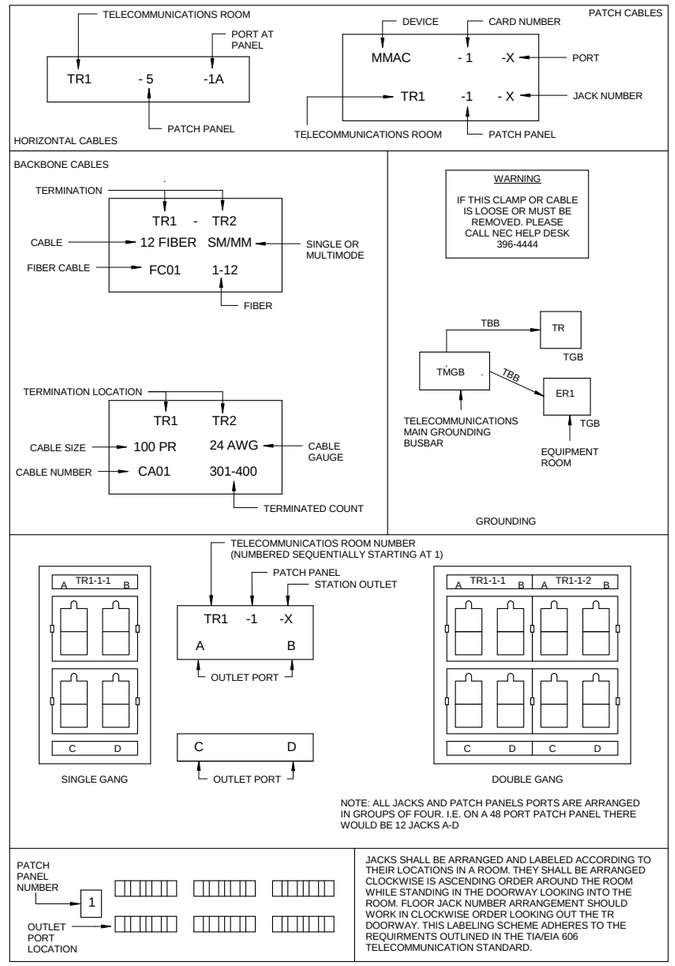

GENERAL NOTES

GENERAL NOTES, COMMUNICATIONS:

1. NOT USED.
2. NOT USED.
3. NOT USED.
4. NOT USED.
5. NOT USED.
6. NOT USED.
7. NOT USED.
8. IN GERNERAL, TO MINIMIZE SOUND TRANSMISSION, DO NOT INSTALL "BACK TO BACK" OUTLET BOXES.
9. NOT USED.
10. NOT USED.
11. NOT USED.
12. SEAL PENETRATIONS THROUGH FLOORS OR FIRE WALLS TO MAINTAIN THE INTEGRITY OF THE FIRE AND ACOUSTIC RATINGS OF THE WALLS AND FLOORS.
13. NOT USED.
14. NOT USED.
15. SEE ELECTRICAL LEGEND AND NOTES FOR TYPICAL DEVICE MOUNTING HEIGHTS.

NOTES, CATV:

1. THE CONTRACTOR SHALL PROVIDE CATV AMPLIFIERS, SPLITTERS, COMBINERS, LINE TAPS, CABLES, OUTLETS, TILT COMPENSATORS, AND ALL OTHER PARTS, COMPONENTS, AND EQUIPMENT NECESSARY TO PROVIDE A COMPLETE AND USABLE CATV SYSTEM.

2. THE CATV SYSTEM SHALL PROVIDE A HIGH-QUALITY SIGNAL TO ALL OUTLETS WITH A RETURN PATH FOR INTERACTIVE TELEVISION AND CABLE MODEM ACCESS.

3. THE CATV SYSTEM SHALL OPERATE WITHIN THE 5 TO1000 MHz BANDWIDTH USING 1000 MHZ PASSIVE DEVICES AND A MINIMUM OF 750 MHz ACTIVE DEVICES.

4. EACH CATV OUTLET SHALL HAVE A MINIMUM SIGNAL LEVEL OF 0 DECIBEL MILLIVOLTS (dBmV)(1000 MICROVOLTS) AND A MAXIMUM OF 15 dBmV AT 55 AND 750 MHz.

US Army Corps of Engineers ®
HUNTSVILLE CENTER

SYMBOL	DESCRIPTION	DATE	BY

DESIGN BY: EJJ
DRAWN BY: EJJ
CKD BY:
SBMT BY:
DATE: JUNE 2014
SOLICITATION NO.: N/A
CONTRACT NO.: N/A
CATEGORY CODE: 65% DESIGN PACKAGE
PLOT DATE: 6/2/2014 11:51:53 AM
PLOT SCALE: 12" = 1'-0"
SIZE: D 22" x 34"
FILE NAME:

U.S. ARMY CORPS OF ENGINEERS
ENGINEERING AND SUPPORT CENTER, HUNTSVILLE
4820 UNIVERSITY SQ.
HUNTSVILLE, AL 35816

TRAINING SUPPORT CENTER (TSC) STANDARD DESIGN
SMALL

COMMUNICATIONS LEGEND AND GENERAL NOTES

PLATE REFERENCE NUMBER
T-001
SHEET 52 OF 55

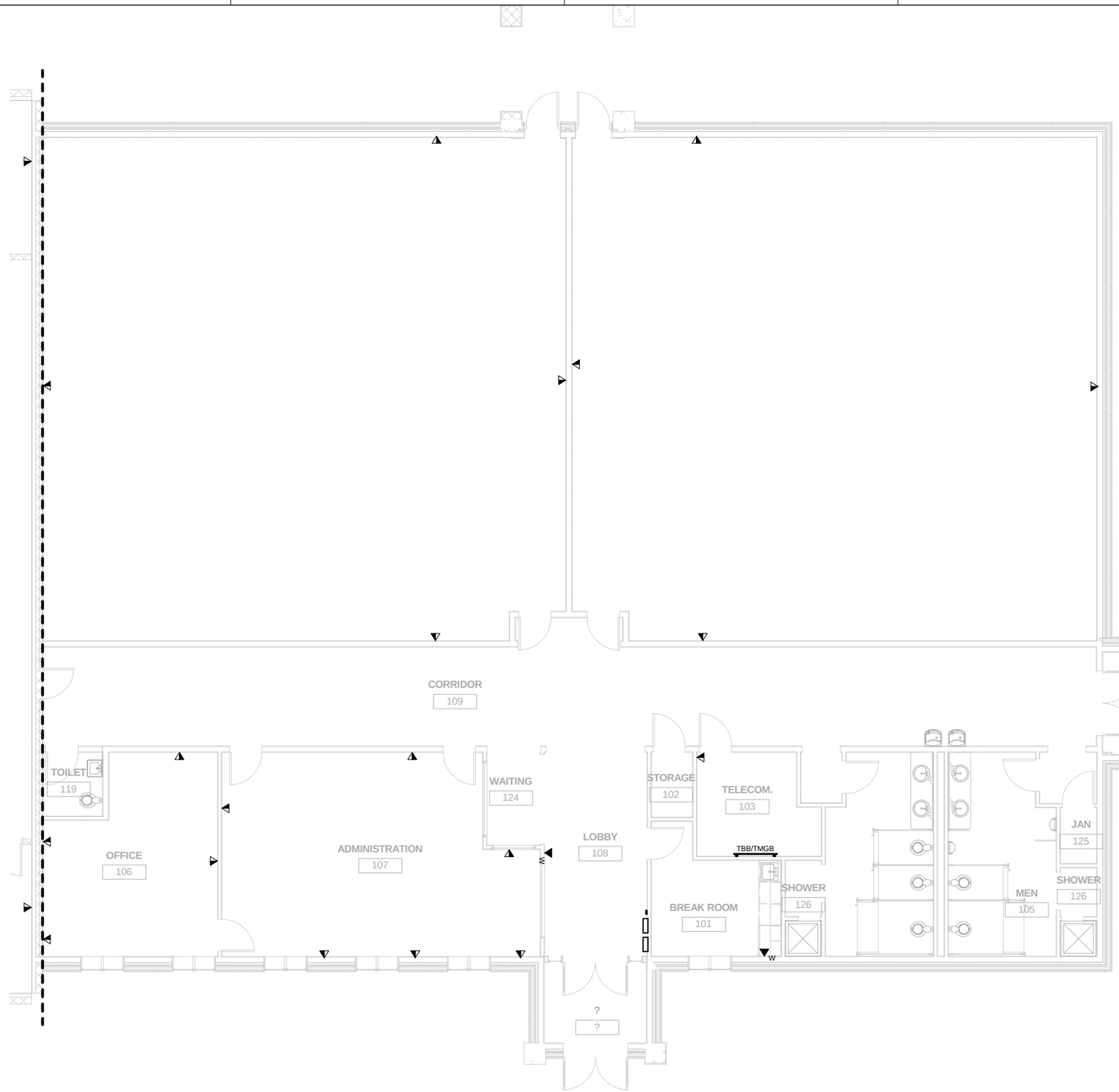

TELECOMMUNICATIONS - AREA A

SCALE: 3/16" = 1'-0"

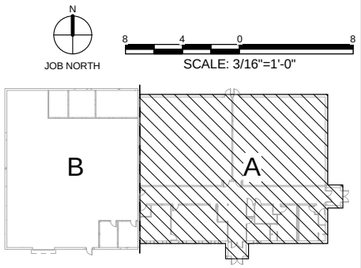

US Army Corps of Engineers ®
HUNTSVILLE CENTER

SYMBOL	DESCRIPTION	DATE	BY

DESIGN BY: ESJ
DRAWN BY: EJJ
CKD BY:
SBMT BY:
DATE: JUNE 2014
SOLICITATION NO.: N/A
CONTRACT NO.: N/A
PLOT DATE: 6/2/2014 11:51:56 AM
CATEGORY CODE: 65% DESIGN PACKAGE
PLOT SCALE: As indicated
SIZE: 22" x 34"
FILE NAME:

U.S. ARMY CORPS OF ENGINEERS
ENGINEERING AND SUPPORT CENTER, HUNTSVILLE
4820 UNIVERSITY SQ.
HUNTSVILLE, AL 35816

TRAINING SUPPORT CENTER (TSC)
STANDARD DESIGN
SMALL

COMMUNICATIONS PLAN - AREA A

PLATE REFERENCE NUMBER
T-101

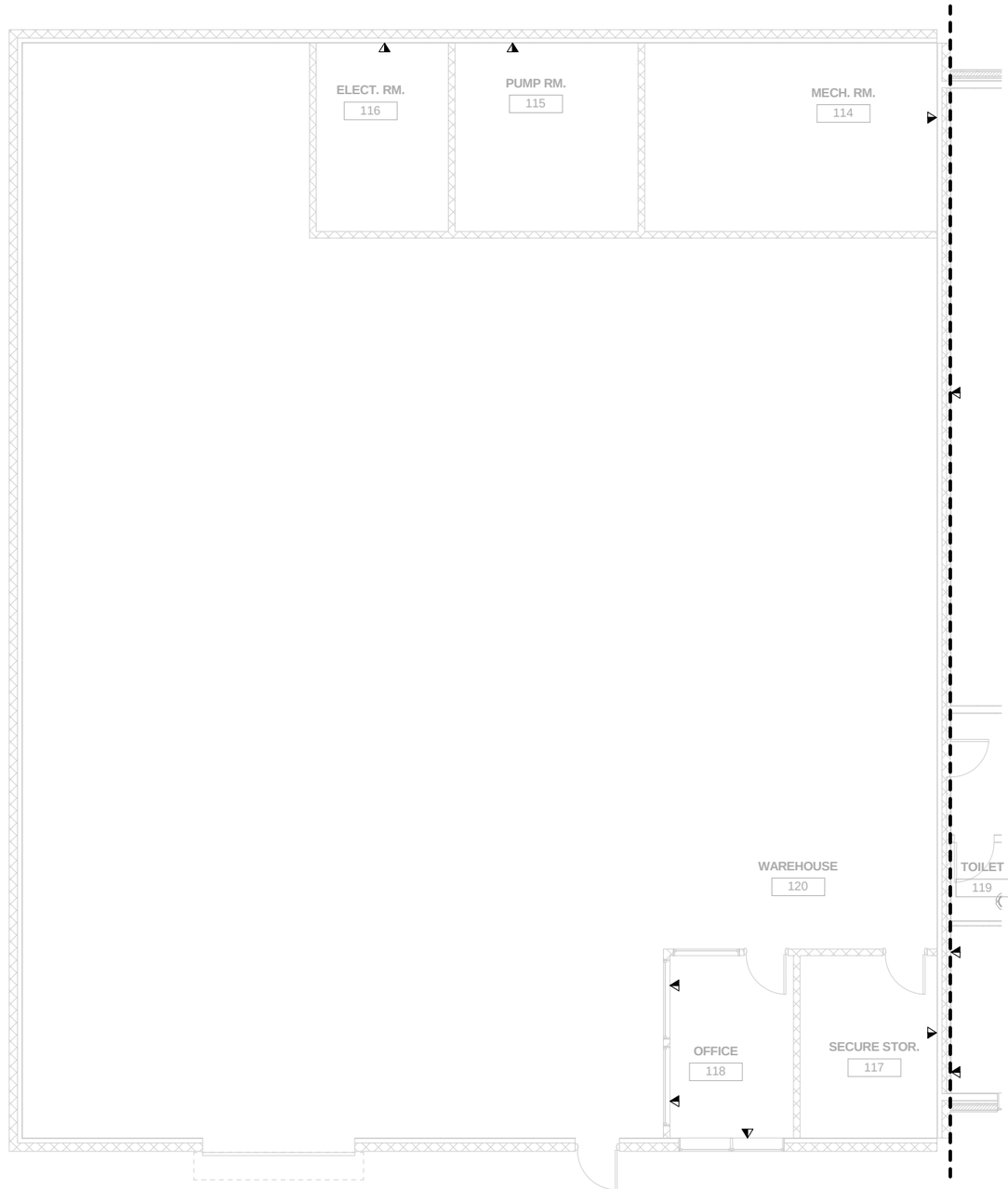

TELECOMMUNICATIONS - AREA B

SCALE: 3/16" = 1'-0"

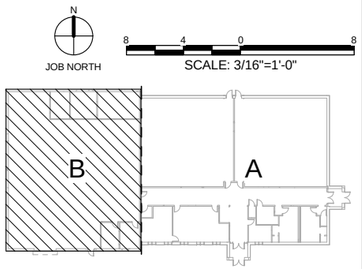

US Army Corps of Engineers ®
HUNTSVILLE CENTER

SYMBOL	DESCRIPTION	DATE	BY

U.S. ARMY CORPS OF ENGINEERS
ENGINEERING AND SUPPORT CENTER, HUNTSVILLE
4820 UNIVERSITY SQ.
HUNTSVILLE, AL 35816

DESIGN BY: EEJ	DATE: JUNE 2014
DRAWN BY: EJJ	SOLICITATION NO.: N/A
SBMT BY:	CONTRACT NO.: N/A
CKD BY:	CATEGORY CODE: 85% DESIGN PACKAGE
PLOT DATE: 6/2/2014 11:51:58 AM	
PLOT SCALE: As indicated	FILE NAME:
SIZE: 34" x 22"	

TRAINING SUPPORT CENTER (TSC)
STANDARD DESIGN
SMALL

COMMUNICATIONS PLAN - AREA B

PLATE REFERENCE NUMBER
T-102