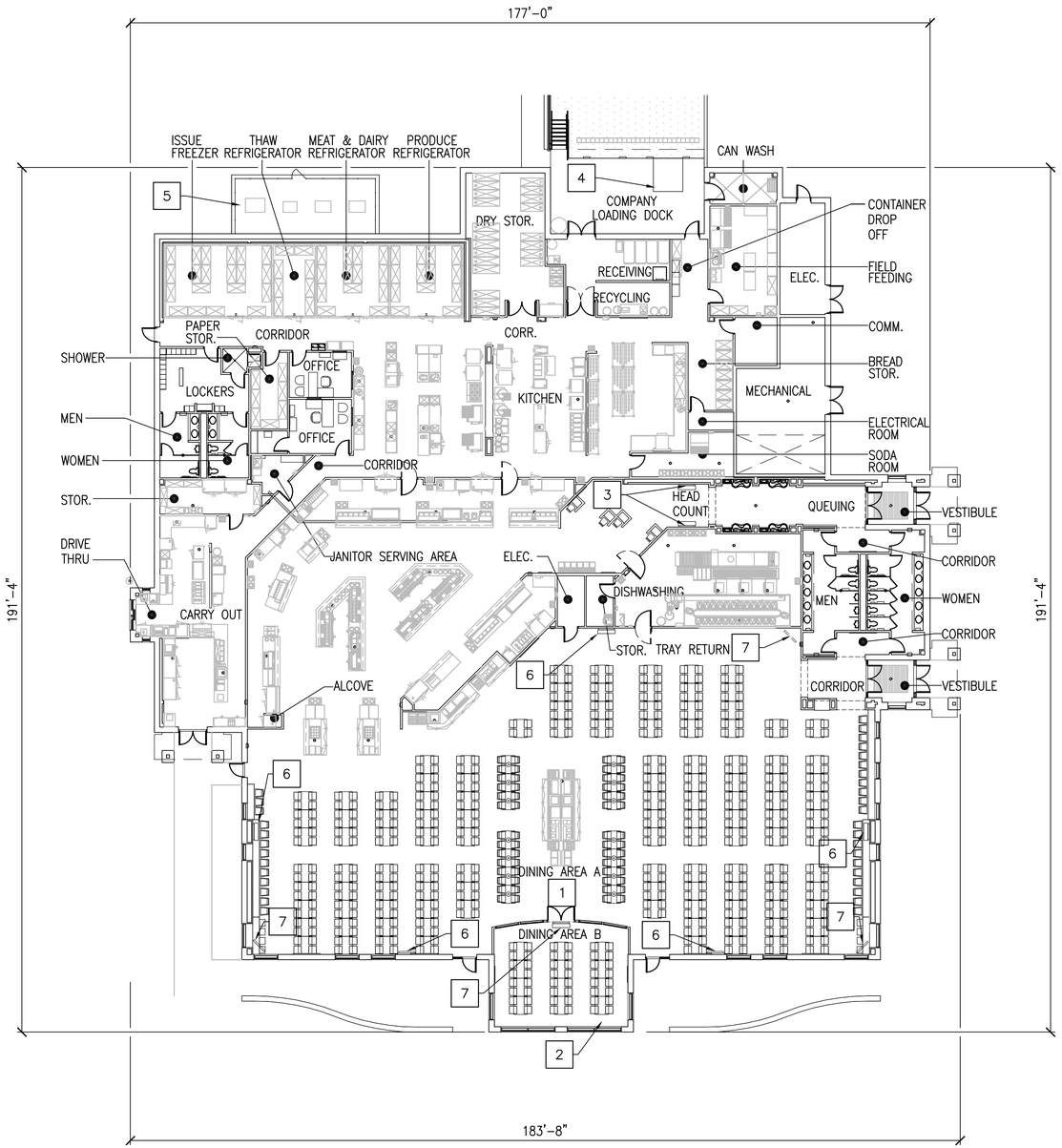

PLAN NORTH

OVERALL FLOOR PLAN

1/16"=1'-0"

GRAPHIC SCALES

1/16" = 1'-0" 0 5' 10' 20' 30' 60'

GENERAL NOTES

1. FLOOR PLAN INDICATES THE PREFERRED SOLUTION IN SCHEMATIC FORM ONLY. PROPOSER IS ALLOWED TO MAKE ADJUSTMENTS FOR EXTERIOR FACADE/ARCHITECTURAL THEME AND/OR TO ACCOMODATE SPECIFIC BUILDING ENGINEERING SYSTEMS (STRUCTURAL, MECHANICAL, FIRE PROTECTION ETC.). THESE ADJUSTMENTS, AS WELL AS ANY FUNCTIONAL DEVIATIONS PROPOSED, WILL BE EVALUATED BY THE CENTER OF STANDARDIZATION FOR THIS FACILITY DURING THE SOURCE SELECTION EVALUATION BOARD.

2. AREAS SHOWN ON THE NET AREA COMPUTATION ARE TO BE CONSIDERED NET PROGRAM REQUIREMENTS. THE MAXIMUM GROSS SQUARE FOOTAGE ALLOWABLE FOR THIS CONTRACT IS IDENTIFIED IN SECTION 01 10 00 PARAGRAPH 2 OF THE RFP. A REDUCED OVERALL GROSS AREA IS ACCEPTALE IF ALL NET PROGRAM REQUIREMENTS AND ADJACENCIES ARE MET.

NOTES

1. DINING AREA 'A', 133 TABLES = 550 SEATS
2. DINING AREA 'B', 12 TABLES = 48 SEATS
3. FLAT PANEL TV MENU BOARD.
4. DOCK LEVELER.
5. FREEZER AND REFRIGERATION UNITS (MAY BE PLACED ON ROOF OR, AS AN ALTERNATIVE, IN UNOBSTRUCTED SPACE ONLY WHEN APPROVED BY THE INSTALLATION). THE LOCATION OF THE UNITS MAY VARY. SITE ADAPT AE TO COORDINATE LOCATION PER ATFP, CIVIL, AND FOOD SERVICE REQUIREMENTS.
6. WALL MOUNTED FLAT PANEL TELEVISION.
7. CELINING MOUNTED FLAT PANEL TELEVISION.

NET AREA COMPUTATIONS

SPACE	801-1300 PERSON
	FT^2
KITCHEN	2,516
DINING (AREAS A & B)	8,978
SERVING	3,211
DISHWASHING	797
RECEIVING VESTIBULE	383
PUBLIC TOILETS (2)	565
STAFF TOILETS/ LOCKERS/ H.C. SHOWER	287
JANITOR	70
VESTIBULE (2)	179
QUEUING	378
HEADCOUNT	408
OFFICES (2)	227
REF./FREEZER	1,014
FIELD FEEDING	363
DRY STORAGE	553
BREAD STORAGE	149
NON FOOD STORAGE (2)	130
SODA ROOM	191
PAPER STORAGE	154
CARRY-OUT PREPARATION	554
CARRY-OUT SERVING	352
CARRY-OUT STORAGE	163
CAN/CART WASH	100
MECHANICAL	574
ELECTRICAL (2)	315
COMM. RM.	100
CORRIDORS	1,143
TOTAL NET AREA	23,854

GROSS AREA COMPUTATIONS

SPACE	801-1300 PERSON
	FT^2
BUILDING	25,982
LOADING DOCK	250
CANOPIES	265
TOTAL	26,497

NOTE:

SQUARE FOOTAGE CALCULATED IAW UFC 3-100-10 PARA 2-15.3

US Army Corps of Engineers
Norfolk District

MARK	DATE	DESCRIPTION	BY	APP.

DATE: 12/11/09
SCALE: AS NOTED
NORFOLK DISTRICT FILE NO.: —
SPECIFICATION NO.: —
Plot scale: 1:1
CHECKED: RTB
SUBMITTED: JH
DESIGNED: JH
DRAWN: SS
PROJECT NO.: —
DRAWING NO.: AE101
Last saved by: —
File name: AE101.DWG

NORFOLK DISTRICT
CORPS OF ENGINEERS
NORFOLK, VIRGINIA

NAO CENTER OF STANDARDIZATION

US ARMY STANDARD DESIGN
1300 SOLDIER PERMANENT PARTY DINING FACILITY

OVERALL FLOOR PLAN

SHEET REFERENCE NUMBER
AE101
SHEET OF

H:\PJ\3285\CAD-Stripdown-DFAC\CAD-1300PP_RIC\CAD-Richmond\Sheets\A\AE101.dwg Fri, 18 Dec 2009 - 3:04pm ssurendhranath

WALK-IN NOTES

1. SEE DETAIL #B1/QF501 FOR INSULATED FLOOR DETAIL.
2. CENTER LINE OF BREAKER STRIP IN FLOOR.
3. WALK–IN INSTALLER TO RUN DRAIN LINE EXPOSED IN FREEZER & REFRIGERATORS, BEHIND SHELVING, & EXTEND DOWN INTO FUNNEL OF FLOOR DRAIN. PROVIDE "P" TRAP OUTSIDE WALK–IN COMPARTMENT.
4. WALK–IN INSTALLER TO PROVIDE SLEEVES FOR DRAIN LINE IN WALLS OF WALK–IN & IN BUILDING WALL AT CORRECT HEIGHT FOR PROPER DRAINAGE. CAULK ALL SLEEVES.
5. ALL ELECTRICAL CONNECTIONS FOR WALK–INS INCLUDING WIRING TO ALL EVAPORATORS, VAPOR–PROOF LIGHTS, DOOR HEATERS, THRESHOLD HEATERS, TIME CLOCKS, HEATED PRESSURE RELIEF PORT, WIRING FROM FREEZER EVAPORATOR TO ROOM THERMOSTAT, & ALL CONTROLS TO BE PROVIDED.
6. FREEZER EVAPORATOR SHALL BE ELECTRICALLY CONNECTED TO ITS RESPECTIVE CONDENSING UNIT AS REQUIRED. PROVIDE WIRING FROM THE TIME CLOCK ON THE FREEZER CONDENSING UNIT TO THE ELECTRIC DEFROST HEATERS IN THE EVAPORATOR. ELECTRICAL INTERCONNECTIONS BETWEEN THE REFRIGERATOR EVAPORATORS & THEIR RESPECTIVE CONDENSING UNITS ARE NOT REQUIRED.
7. REMOTE AIR COOLED REFRIGERATOR & FREEZER CONDENSING UNITS (ITEM #6 & #7) SHALL BE MOUNTED ON METAL RACKS AND FACTORY WIRED. UNITS SHALL BE LOCATED OUTDOORS ON A CONCRETE PAD AS SHOWN ON PLAN. LOCATION OF CONDENSING UNITS MAY VARY DEPENDING ON SITE–ADAPT CONSIDERATIONS.

   ITEM #6
   FREEZER CONDENSING UNIT SHALL BE WIRED 208–60–3 PHASE WITH AN APPROX. TOTAL LOAD OF 29.9 AMPS., INCLUDING EVAPORATOR. A SEPARATE 208–60–1 PHASE LINE SHALL BE RUN FROM THE CONTROL PANEL ON THE CONDENSING UNIT TO THE EVAPORATORS IN THE WALK–IN TO HANDLE AN 11.7 AMP. LOAD FOR THE ELECTRIC DEFROST HEATERS IN EACH EVAPORATOR. CONDENSING UNIT MEASURES APPROX. 37" X 52" X 39" HIGH & WEIGHS APPROX. 825 LBS.

   ITEM #7
   THAW REFRIGERATOR CONDENSING UNIT SHALL BE WIRED 208–60–3 PHASE WITH AN APPROX. TOTAL LOAD OF 4.2 AMPS., NOT INCLUDING EVAPORATOR. CONDENSING UNIT MEASURES APPROX. 28" X 38" X 17" HIGH & WEIGHS APPROX. 225 LBS.

   TWO OTHER REFRIGERATOR CONDENSING UNITS SHALL EACH BE WIRED 208–60–3 PHASE WITH AN APPROX. TOTAL LOAD OF 8.2 AMPS. EACH, NOT INCLUDING EVAPORATOR. EACH CONDENSING UNIT MEASURES APPROX. 28" X 38" X 17" HIGH & WEIGHS APPROX. 235 LBS.
8. OVERALL HEIGHT OF WALK–IN SHALL BE APPROX. 9'–5" A.F.F.
9. WALK–IN INSTALLER SHALL PROVIDE METAL TRIM STRIPS TO MATCH WALK–IN FACING WHERE WALK–IN ABUTS BUILDING WALLS, & CLOSURE PANELS FROM TOP OF WALK–IN TO FINISHED CEILING.
10. FINISHED FLOOR TO BE LEVEL PLUS OR MINUS 1/8".
11. ALL ELECTRIC CONDUIT SHALL BE RUN ON TOP (EXTERIOR) OF WALK–IN & SHALL HAVE VAPOR SEALS ON INTERIOR AND EXTERIOR OF CONDUIT.

SODA SYSYEM NOTES

1. 6" DIA. PVC CONDUITS STUBBED UP OUT OF FLOOR 4" A.F.F. SYRUP & CO2 LINES & BAG–N–BOX JUICE LINES EXTENDED DOWN INTO CONDUITS BY VENDOR(S).
2. PROVIDE 6" DIA. PVC CONDUITS BELOW FLOOR FOR SYRUP & CO2 & BAG–N–BOX JUICE LINES . ALL TURNS TO BE SMOOTH SWEEPS W/ 30" MIN. RADIUS. SYRUP & CO2 LINES & BAG–N–BOX JUICE LINES EXTENDED THROUGH CONDUITS BY VENDOR(S).
3. 6" DIA. PVC CONDUIT STUBBED UP OUT OF FLOOR 4" A.F.F. SYRUP & CO2 LINES & BAG–N–BOX JUICE LINES EXTENDED UP OUT OF CONDUIT & CONNECTED TO DISPENSING EQUIPMENT BY VENDOR(S).
4. TWO 2" DIA. PVC CONDUITS STUBBED UP OUT OF FLOOR 4" A.F.F. FOR CO2 LINES FROM BULK CO2 TANK. CO2 LINES EXTENDED DOWN INTO CONDUITS BY VENDOR.
5. PROVIDE TWO 2" DIA. PVC CONDUITS BELOW FLOOR FOR CO2 LINES FROM BULK CO2 TANK. ALL TURNS TO BE SMOOTH SWEEPS WITH 24" MIN. RADIUS. CO2 LINES EXTENDED THROUGH CONDUITS BY VENDOR.
6. 2" DIA. PVC CONDUIT STUBBED UP OUT OF FLOOR 4" A.F.F. CO2 LINES FROM BULK CO2 TANK TO BE EXTENDED UP OUT OF CONDUIT AND CONNECTED TO DISPENSING EQUIPMENT BY VENDOR(S)

ICE MAKING MACHINE REMOTE CONDENSER NOTES

1. THREE REMOTE CONDENSERS FOR ICE MAKING MACHINES – ITEM #92 SHALL BE INSTALLED ON BUILDING ROOF AS CLOSE AS POSSIBLE ABOVE ICE MAKING MACHINE LOCATIONS. EACH CONDENSER MEASURES APPROX. 28" X 30" X 38" HIGH & WEIGHS APPROX. 110 LBS.
2. EACH CONDENSER SHALL BE ELECTRICALLY CONNECTED TO ITS RESPECTIVE ICE MACHINE. SEPARATE ELECTRICAL ROUGH–INS FOR THE CONDENSERS ARE NOT REQUIRED.
3. REFRIGERATION LINES FOR EACH CONDENSER FURNISHED & INSTALLED W/ ICE MAKING MACHINES.

GENERAL NOTES

1. ALL WORK SHALL BE DONE IN ACCORDANCE W/ APPLICABLE CODES.
2. ALL DIMENSIONS ARE FROM THE FINISHED SURFACE OF WALLS, FLOORS OR CEILINGS.
3. ALL DIMENSIONS INDICATED FOR ROUGH–INS SHALL BE TO THE CENTER OF THE ROUGH–IN.
4. UTILITY REQUIREMENTS SHOWN ON DRAWINGS ARE FOR THE FOOD SERVICE EQUIPMENT ONLY.
5. IN–WALL BACKING SHALL BE PROVIDED FOR ALL WALL MOUNTED FOOD SERVICE EQUIPMENT AS REQUIRED. COORDINATE FOR TYPES, SIZES & LOCATIONS OF BACKING.

ELECTRICAL NOTES

1. ELECTRICAL ROUGH–INS & FINAL CONNECTIONS TO EQUIPMENT SHALL BE UNDER ELECT. SEC. MATERIALS FOR EQUIPMENT CONNECTIONS SHALL BE FURNISHED & INSTALLED UNDER ELECT. SEC. EXCEPT AS NOTED ON DRAWINGS.
2. ELECTRICAL DISCONNECTS ARE NOT FURNISHED W/ EQUIPMENT. THEY SHALL BE FURNISHED & INSTALLED WHERE REQUIRED UNDER ELECT. SEC. COORDINATE W/ EQUIPMENT ON PROPER LOCATIONS.
3. ALL CONDUIT SHALL BE CONCEALED IN WALLS, FLOOR OR CEILING EXCEPT ONLY WHERE ABSOLUTELY NECESSARY.
4. ALL CONDUIT & ELECTRICAL CORDS SHALL BE LOCATED UP OFF THE FLOOR TO FACILITATE FLOOR CLEANING & SHALL BE SUPPORTED FROM ABOVE. FLOOR MOUNTED SUPPORTS SHALL NOT BE USED.
5. RECEPTACLES OF THE PROPER CONFIGURATION TO ACCOMMODATE THE PLUGS FURNISHED ON THE EQUIPMENT SHALL BE FURNISHED & INSTALLED UNDER ELECT. SEC.

PLUMBING NOTES

1. PLUMBING ROUGH–INS UNDER PLUMB. SEC. INCLUDING FLOOR DRAINS, FLOOR SINKS, & GREASE INTERCEPTORS.
2. FINAL CONNECTIONS TO EQUIPMENT UNDER PLUMB. SEC.. COORDINATE W/ THE EQUIPMENT INSTALLER ON CONNECTIONS TO EQUIPMENT.
3. MATERIALS FOR EQUIPMENT CONNECTIONS INCLUDING PIPING, FITTINGS, STOPS, TRAPS, BACKFLOW PREVENTION DEVICES & PRESSURE REGULATORS FURNISHED & INSTALLED UNDER PLUMB. SEC. EXCEPT AS NOTED ON DRAWINGS.
4. ALL PIPING SHALL BE CONCEALED IN WALLS, FLOOR OR CEILING EXCEPT ONLY WHERE ABSOLUTELY NECESSARY.
5. ALL PIPING SHALL BE LOCATED UP OFF THE FLOOR TO FACILITATE FLOOR CLEANING & SHALL BE SUPPORTED FROM ABOVE. FLOOR MOUNTED SUPPORTS SHALL NOT BE USED.
6. WATER FILTERS OR SOFTENERS NOT FURNISHED W/ EQUIPMENT EXCEPT AS NOTED ON DRAWINGS.
7. GAS PRESSURE REGULATORS SHALL BE FURNISHED W/ THE EQUIPMENT & INSTALLED UNDER PLUMB. SEC..
8. SINKS: FAUCETS & DRAIN FITTINGS FURNISHED W/ THE EQUIPMENT & INSTALLED UNDER PLUMB. SEC.
9. DISPOSERS: SOLENOID VALVE, ATMOSPHERIC VACUUM BREAKER, & WATER INLET FURNISHED W/ THE EQUIPMENT & INSTALLED UNDER PLUMB. SEC.
10. BOOSTER HEATERS: PRESSURE REDUCING VALVE, TEMPERATURE/ PRESSURE RELIEF VALVE, TWO TEMPERATURE/PRESSURE GAUGES & SHOCK ABSORBER FURNISHED W/ THE EQUIPMENT & INSTALLED UNDER PLUMB. SEC.
11. 180 DEGREE WATER LINE FROM BOOSTER HEATER TO DISHWASHER SHALL BE INSULATED UNDER PLUMB. SEC.

VENTILATION NOTES

1. EXHAUST HOOD FURNISHED & INSTALLED BY EQUIPMENT INSTALLER. DUCTWORK & ROOF TOP EQUIPMENT FURNISHED & INSTALLED UNDER MECH. SEC.
2. CONTROLS OR SWITCHES FOR EXHAUST FANS OR MAKE–UP AIR UNITS SHALL BE FURNISHED W/ THE HVAC EQUIPMENT. CONTROLS OR SWITCHES SHALL BE RECESSED IN THE BUILDING WALL, NOT ON THE EXHAUST HOOD.
3. FIRE SUPPRESSION SYSTEM FURNISHED & INSTALLED W/ THE EXHAUST HOOD. CONNECTIONS TO FIRE SUPPRESSION SYSTEM FURNISHED & INSTALLED UNDER ELECT. SEC.

EQUIPMENT CLASSES

A – CONTRACTOR FURNISHED, CONTRACTOR INSTALLED FROM CONSTRUCTION FUNDS.

C – GOVERNMENT FURNISHED, GOVERNMENT INSTALLED. FUNDS OTHER THAN CONSTRUCTION.

L – FURNISHED BY VENDOR

LEGEND

- EQUIPMENT ITEM
- PLUMBING REQUIREMENT
- ELECTRICAL REQUIREMENT
- VENTILATION REQUIREMENT
- WALK–IN NOTE
- SODA SYSTEM NOTE

A.	AMPERES
A.F.F.	ABOVE FINISHED FLOOR
C.R.	CONDENSATE RETURN
C.W.	COLD WATER
D.R.	DUPLEX RECEPTACLE
E.C.	EQUIPMENT CONNECTION
F.D.	FLOOR DRAIN
F.F.D.	FLOOR DRAIN WITH FUNNEL
F.R.	FOUR–PLEX RECEPTACLE
H.P.	HORSE POWER
H.W.	HOT WATER
J.B.	JUNCTION BOX
K.W.	KILOWATT
P.W.	PRE–WIRED
S.O.	STUB OUT
S.S.	STEAM SUPPLY
S.R.	SPECIAL RECEPTACLE
S.U.	STUB UP

US Army Corps of Engineers
Norfolk District

MARK	DATE	DESCRIPTION	BY	APP

DESIGNED: JK | CHECKED: JK | DATE: 12/11/09
DRAWN: JK,TJT | SUBMITTED: JK | SCALE: NONE
PROJECT NO. | NORFOLK DISTRICT FILE NO. —
DRAWING NO. QF001 | SPECIFICATION NO. —
Last Revised Jan 12-11-09 | Plot scale: 1:1
File name: QF001.DWG

NORFOLK DISTRICT
CORPS OF ENGINEERS
NORFOLK, VIRGINIA

NAO
CENTER OF STANDARDIZATION

US ARMY STANDARD DESIGN
1300 SOLDIER PERMANENT PARTY DINING FACILITY

GENERAL NOTES AND LEGEND

SHEET REFERENCE NUMBER
QF001
SHEET OF

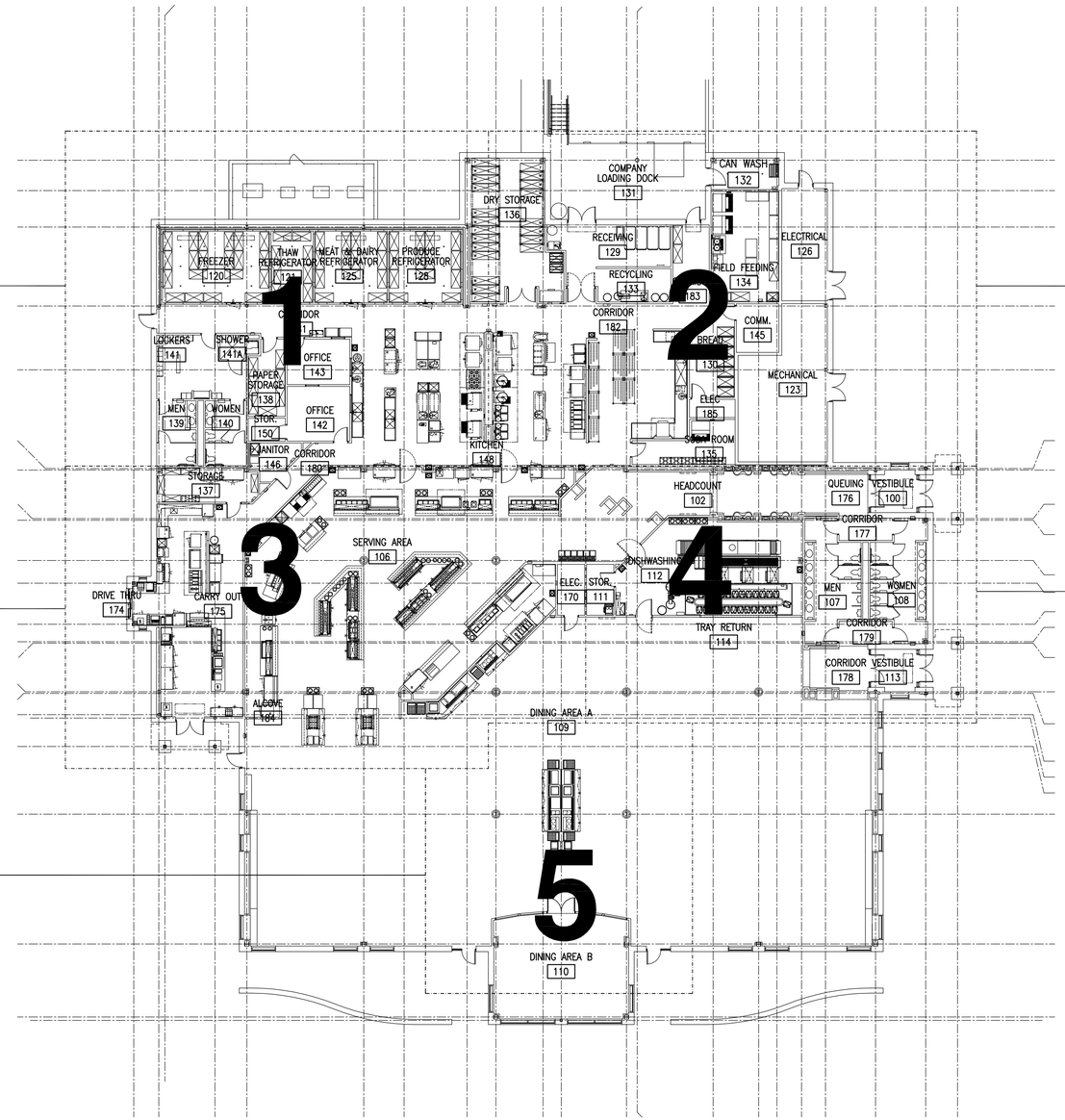

OVERALL FOOD SERVICE PLAN

SCALE : 1/16"=1'-0"

US Army Corps of Engineers
Norfolk District

MARK	DATE	DESCRIPTION	BY	APP

DESIGNED: JK
DRAWN: JK, TJT
PROJECT NO.
CHECKED: JK
SUBMITTED: JK
DATE: 12/11/09
SCALE: AS NOTED
NORFOLK DISTRICT FILE NO. —
SPECIFICATION NO. —
DRAWING NO. QF101
Last saved: 12-11-09
File name: QF101.DWG
Plot scale: 1:1

NORFOLK DISTRICT
CORPS OF ENGINEERS
NORFOLK, VIRGINIA

NAO
CENTER OF STANDARDIZATION

US ARMY STANDARD DESIGN
1300 SOLDIER PERMANENT PARTY
DINING FACILITY

OVERALL FOOD SERVICE PLAN

SHEET REFERENCE NUMBER
QF101
SHEET OF

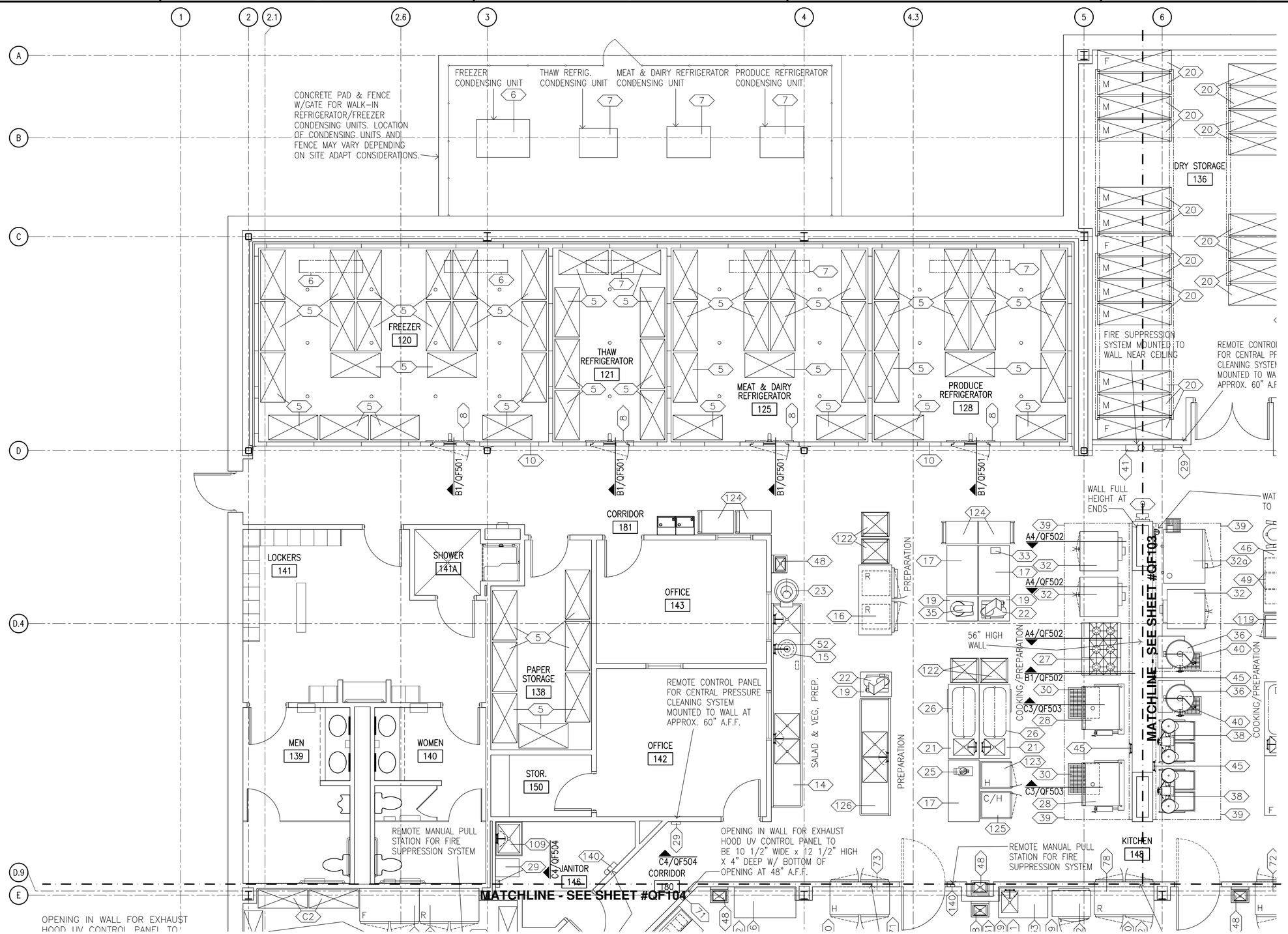

FOOD SERVICE PLAN - AREA 1

SCALE : 1/4"=1'-0"

US Army Corps of Engineers
Norfolk District

MARK	DATE	DESCRIPTION	BY	APP

DESIGNED: JK
DRAWN: JK,TJT
PROJECT NO.
CHECKED: JK
SUBMITTED: JK
DATE: 12/11/09
SCALE: AS NOTED
NORFOLK DISTRICT FILE NO. —
SPECIFICATION NO.
DRAWING NO. QF102
Last saved on 12-11-09
File name: QF102.DWG
Plot scale: 1:1

NORFOLK DISTRICT
CORPS OF ENGINEERS
NORFOLK, VIRGINIA

NAO
CENTER OF STANDARDIZATION

US ARMY STANDARD DESIGN
1300 SOLDIER PERMANENT PARTY
DINING FACILITY

FOOD SERVICE PLAN - AREA 1

SHEET REFERENCE NUMBER
QF102
SHEET OF

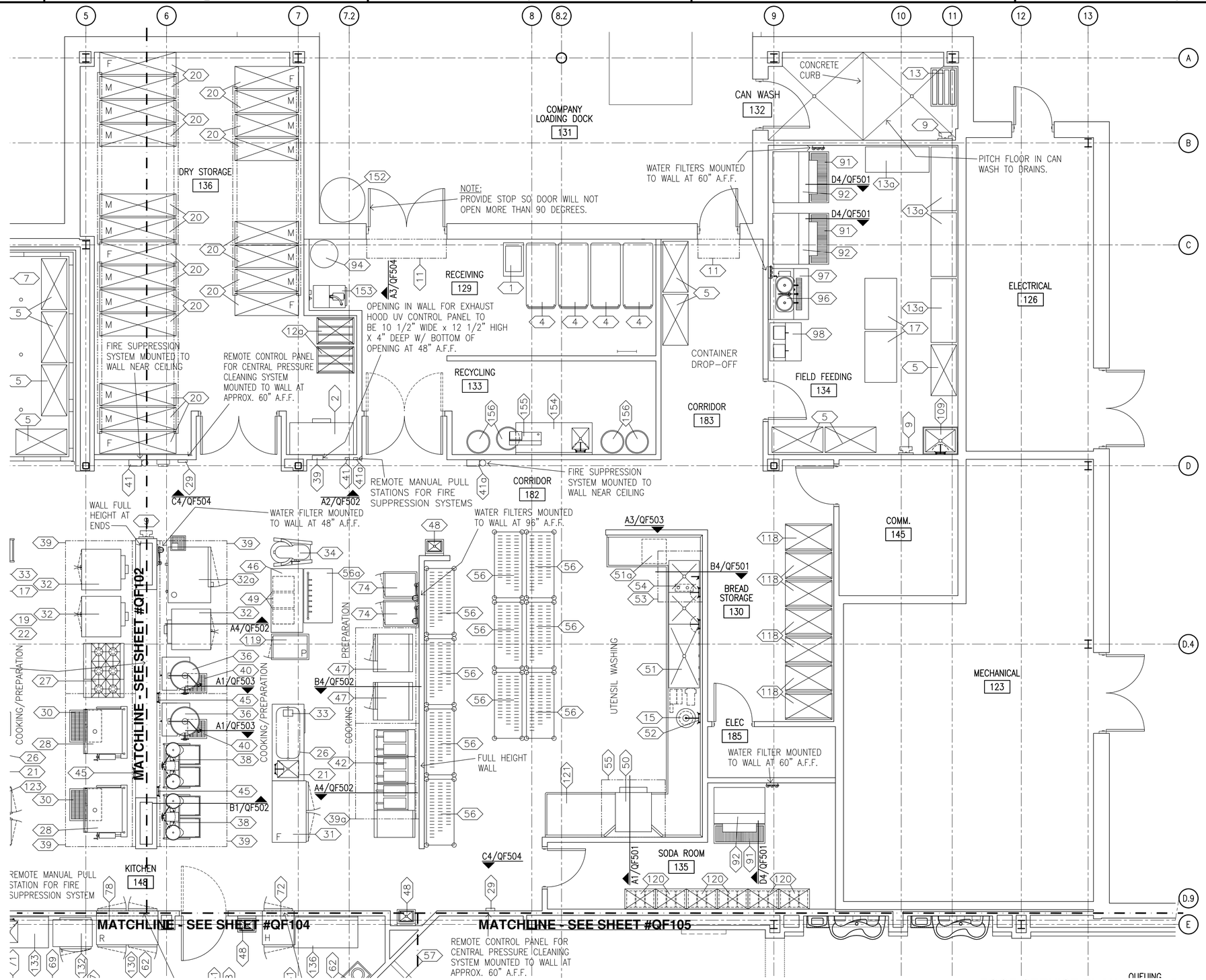

FOOD SERVICE PLAN - AREA 2

SCALE : 1/4"=1'-0"

US Army Corps of Engineers
Norfolk District

MARK	DATE	DESCRIPTION	BY	APP

DESIGNED: JK
DRAWN: JK,TJT
PROJECT NO.
CHECKED: JK
SUBMITTED: JK
DATE: 12/11/09
SCALE: AS NOTED
NORFOLK DISTRICT FILE NO. —
SPECIFICATION NO. —
Plot scale: 1:1
DRAWING NO. QF103
Last revised: 12-11-09
File name: QF103.DWG

NORFOLK DISTRICT
CORPS OF ENGINEERS
NORFOLK, VIRGINIA

NAO
CENTER OF STANDARDIZATION

US ARMY STANDARD DESIGN
1300 SOLDIER PERMANENT PARTY
DINING FACILITY

FOOD SERVICE PLAN - AREA 2

SHEET REFERENCE NUMBER
QF103
SHEET OF

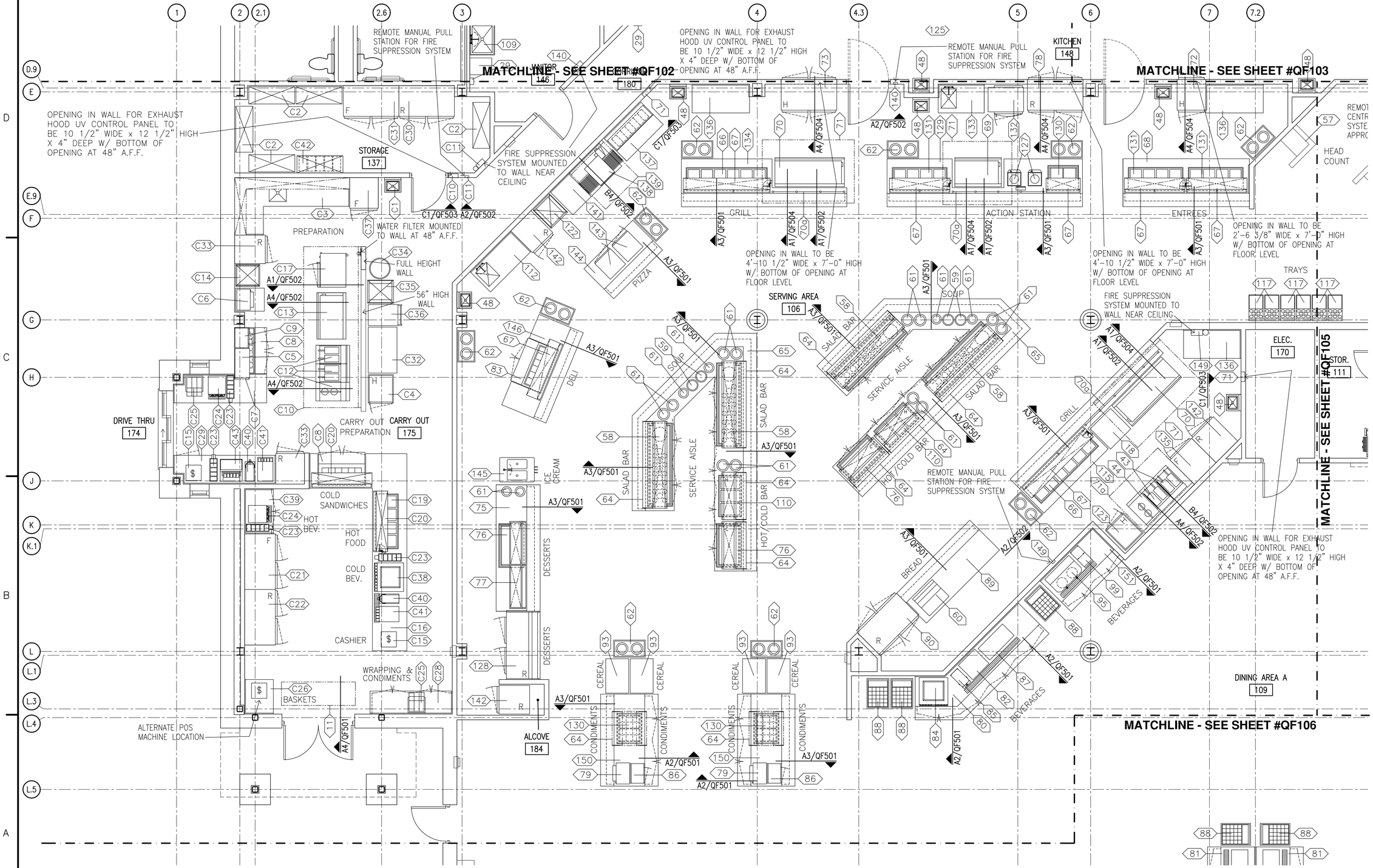

FOOD SERVICE PLAN - AREA 3

SCALE : 1/4"=1'-0"

US Army Corps of Engineers
Norfolk District

REVISIONS			
MARK	DATE	DESCRIPTION	BY	APP

DATE: 12/11/09
SCALE: AS NOTED
CHECKED: JK
SUBMITTED: JK
NORFOLK DISTRICT FILE NO. —
SPECIFICATION NO. —
DESIGNED: JK
DRAWN: JK,TJT
PROJECT NO.
DRAWING NO. QF104
Last saved: 12-11-09
File name: QF104.DWG
Plot scale: 1:1

NORFOLK DISTRICT
CORPS OF ENGINEERS
NORFOLK, VIRGINIA

NAO
CENTER OF STANDARDIZATION

US ARMY STANDARD DESIGN
1300 SOLDIER PERMANENT PARTY DINING FACILITY

FOOD SERVICE PLAN - AREA 3

SHEET REFERENCE NUMBER
QF104
SHEET OF

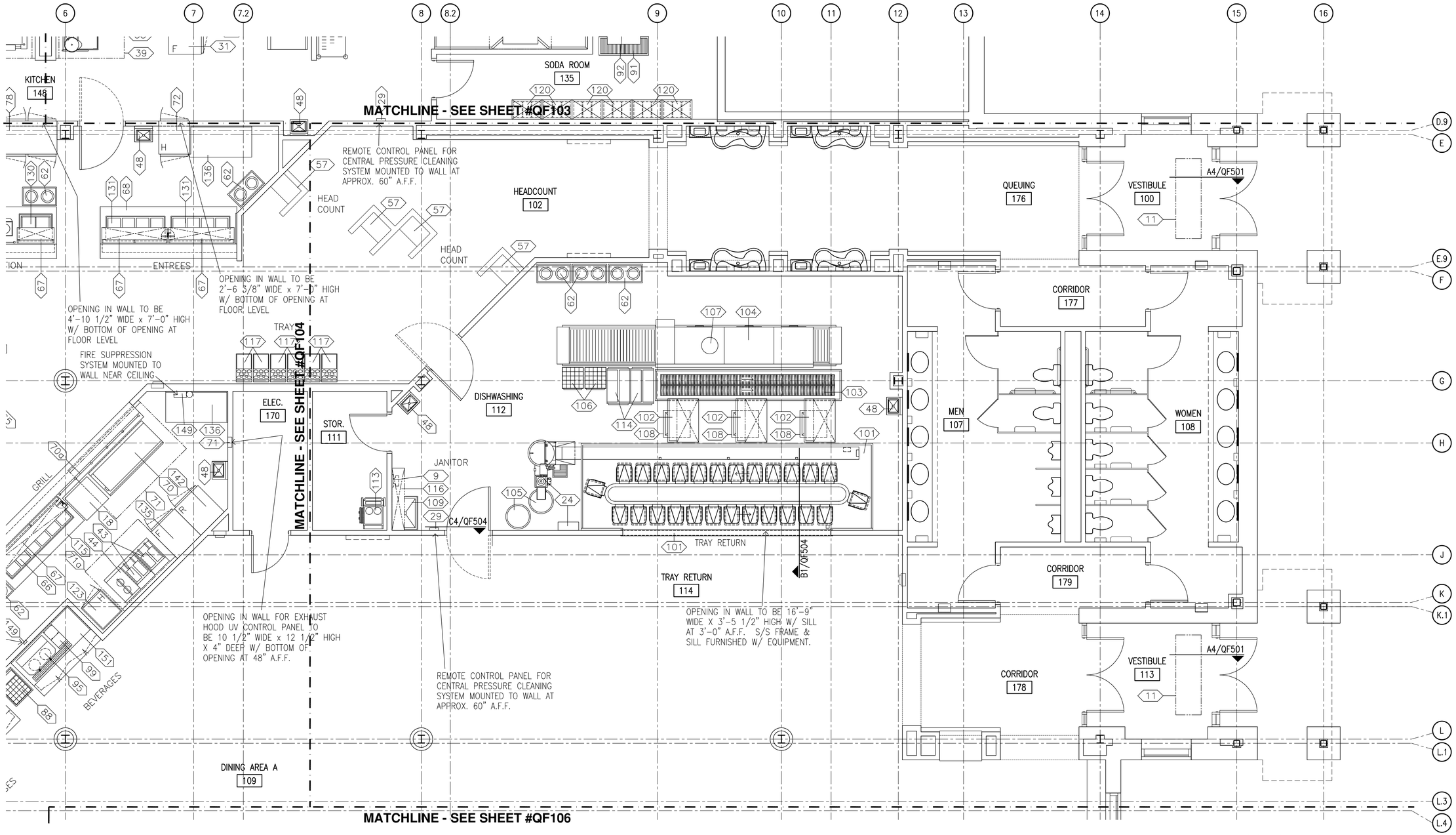

FOOD SERVICE PLAN - AREA 4

SCALE : 1/4"=1'-0"

US Army Corps of Engineers
Norfolk District

MARK	DATE	DESCRIPTION	BY	APP

DATE: 12/11/09
SCALE: AS NOTED
CHECKED: JK
SUBMITTED: JK
NORFOLK DISTRICT FILE NO. —
SPECIFICATION NO. —
DESIGNED: JK
DRAWN: JK, TJT
PROJECT NO.
DRAWING NO. QF105
Last Revised: 12-11-09
File name: QF105.DWG
Plot scale: 1:1

NORFOLK DISTRICT
CORPS OF ENGINEERS
NORFOLK, VIRGINIA

NAO
CENTER OF STANDARDIZATION

US ARMY STANDARD DESIGN
1300 SOLDIER PERMANENT PARTY
DINING FACILITY

FOOD SERVICE PLAN - AREA 4

SHEET REFERENCE NUMBER
QF105
SHEET OF

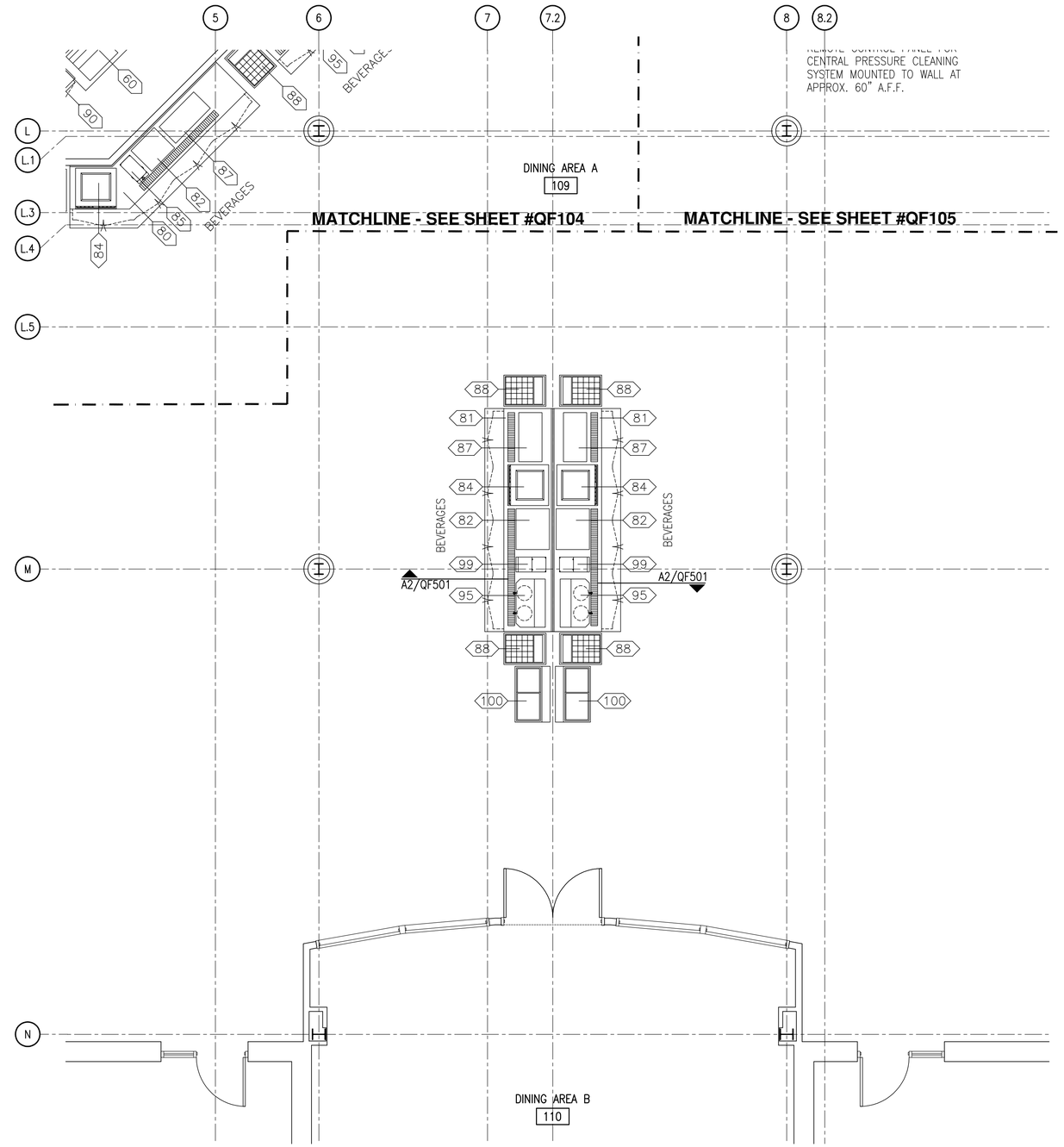

FOOD SERVICE PLAN - AREA 5

SCALE : 1/4"=1'-0"

US Army Corps of Engineers
Norfolk District

MARK	DATE	DESCRIPTION	BY	APP

DESIGNED: JK
DRAWN: JK,TJT
PROJECT NO.
CHECKED: JK
SUBMITTED: JK
DATE: 12/11/09
SCALE: AS NOTED
NORFOLK DISTRICT FILE NO. —
SPECIFICATION NO.
DRAWING NO. QF106
Last revised on 12-11-09
Plot scale: 1:1
File name: QF106.DWG

NORFOLK DISTRICT
CORPS OF ENGINEERS
NORFOLK, VIRGINIA

NAO
CENTER OF STANDARDIZATION

US ARMY STANDARD DESIGN
1300 SOLDIER PERMANENT PARTY
DINING FACILITY

FOOD SERVICE PLAN - AREA 5

SHEET REFERENCE NUMBER
QF106
SHEET OF

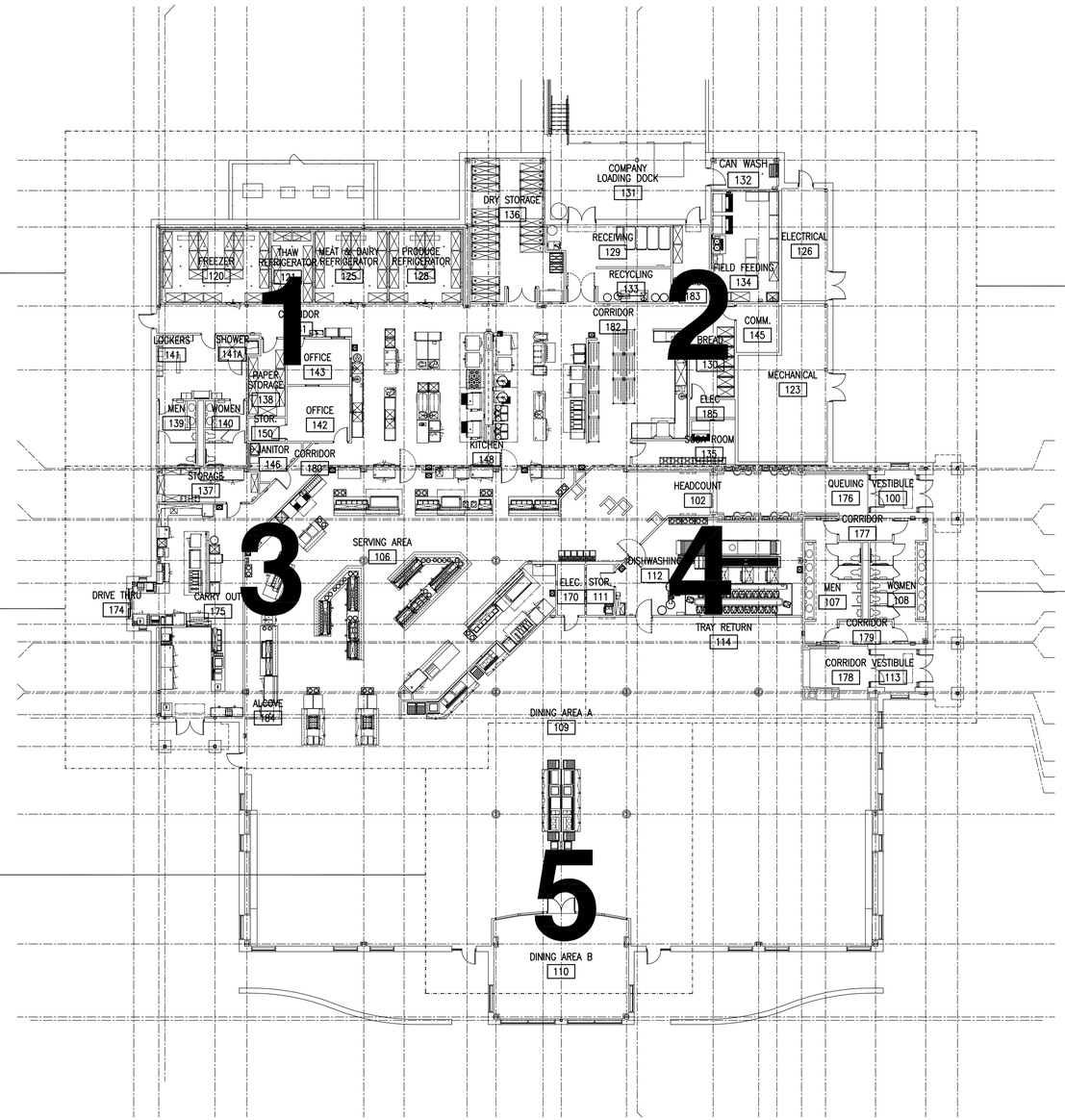

OVERALL UTILITY REQUIREMENT PLAN

SCALE : 1/16"=1'-0"

US Army Corps of Engineers
Norfolk District

MARK	DATE	DESCRIPTION	BY	APP

DESIGNED: JK
DRAWN: JK, TJT
PROJECT NO.
CHECKED: JK
SUBMITTED: JK
DATE: 12/11/09
SCALE: AS NOTED
NORFOLK DISTRICT FILE NO.
SPECIFICATION NO.
DRAWING NO. QF201
Last Revised: 12-11-09
File name: QF201.DWG
Plot scale: 1:1

NORFOLK DISTRICT
CORPS OF ENGINEERS
NORFOLK, VIRGINIA

NAO
CENTER OF STANDARDIZATION

US ARMY STANDARD DESIGN
1300 SOLDIER PERMANENT PARTY
DINING FACILITY

OVERALL UTILITY REQUIREMENT PLAN

SHEET REFERENCE NUMBER
QF201
SHEET OF

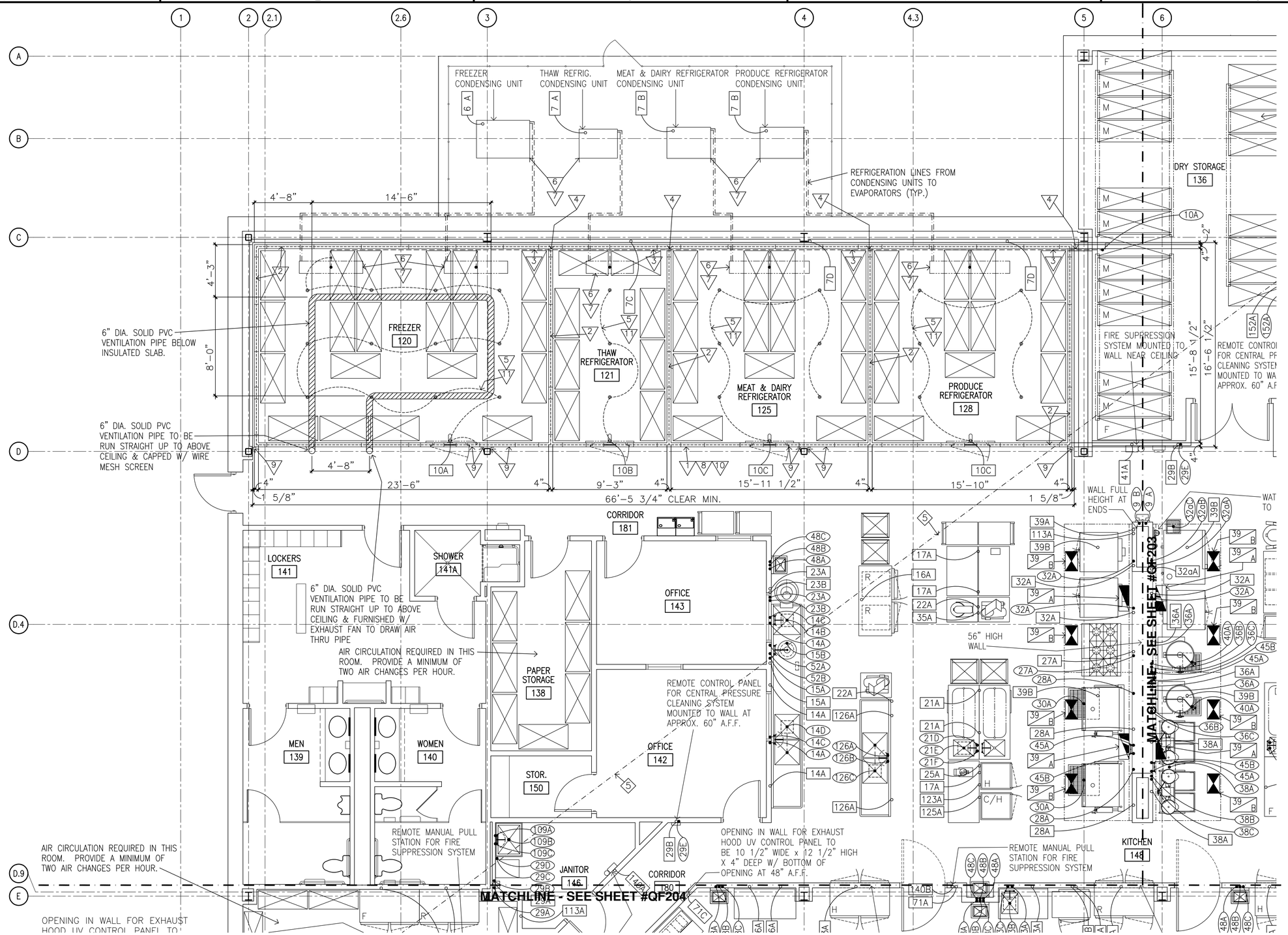

UTILITY REQUIREMENT PLAN - AREA 1

SCALE : 1/4"=1'-0"

US Army Corps of Engineers
Norfolk District

MARK	DATE	DESCRIPTION	BY	APP

DATE: 12/11/09
SCALE: AS NOTED
NORFOLK DISTRICT FILE NO. —
SPECIFICATION NO. —
Plot scale: 1:1

DESIGNED: JK
DRAWN: JK, TJT
PROJECT NO.
CHECKED: JK
SUBMITTED: JK
DRAWING NO. QF 202
Last saved: 2009-11-09
File name: QF202.DWG

NORFOLK DISTRICT
CORPS OF ENGINEERS
NORFOLK, VIRGINIA

NAO
CENTER OF STANDARDIZATION

US ARMY STANDARD DESIGN
1300 SOLDIER PERMANENT PARTY
DINING FACILITY

UTILITY REQUIREMENT PLAN - AREA 1

SHEET REFERENCE NUMBER
QF202
SHEET OF

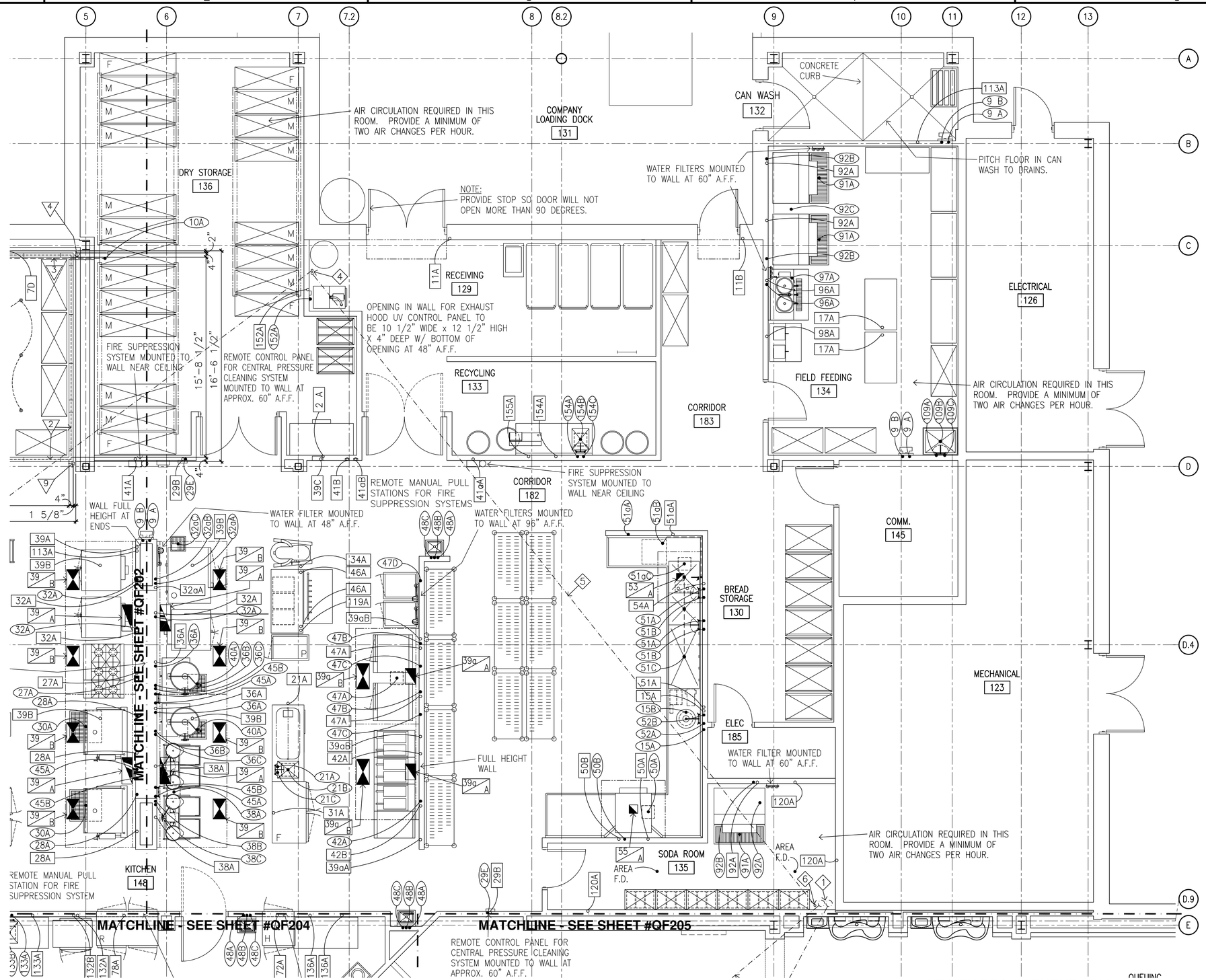

UTILITY REQUIREMENT PLAN - AREA 2

SCALE : 1/4"=1'-0"

US Army Corps of Engineers
Norfolk District

MARK	DATE	DESCRIPTION	BY	APP

DESIGNED: JK
DRAWN: JK, TJT
PROJECT NO.
CHECKED: JK
SUBMITTED: JK
DATE: 12/11/09
SCALE: AS NOTED
NORFOLK DISTRICT FILE NO. —
SPECIFICATION NO.
DRAWING NO. QF203
Last revised: 2009-11-09
File name: QF203.DWG
Plot scale: 1:1

NORFOLK DISTRICT
CORPS OF ENGINEERS
NORFOLK, VIRGINIA

NAO
CENTER OF STANDARDIZATION

US ARMY STANDARD DESIGN
1300 SOLDIER PERMANENT PARTY
DINING FACILITY

UTILITY REQUIREMENT PLAN - AREA 2

SHEET REFERENCE NUMBER
QF203
SHEET OF

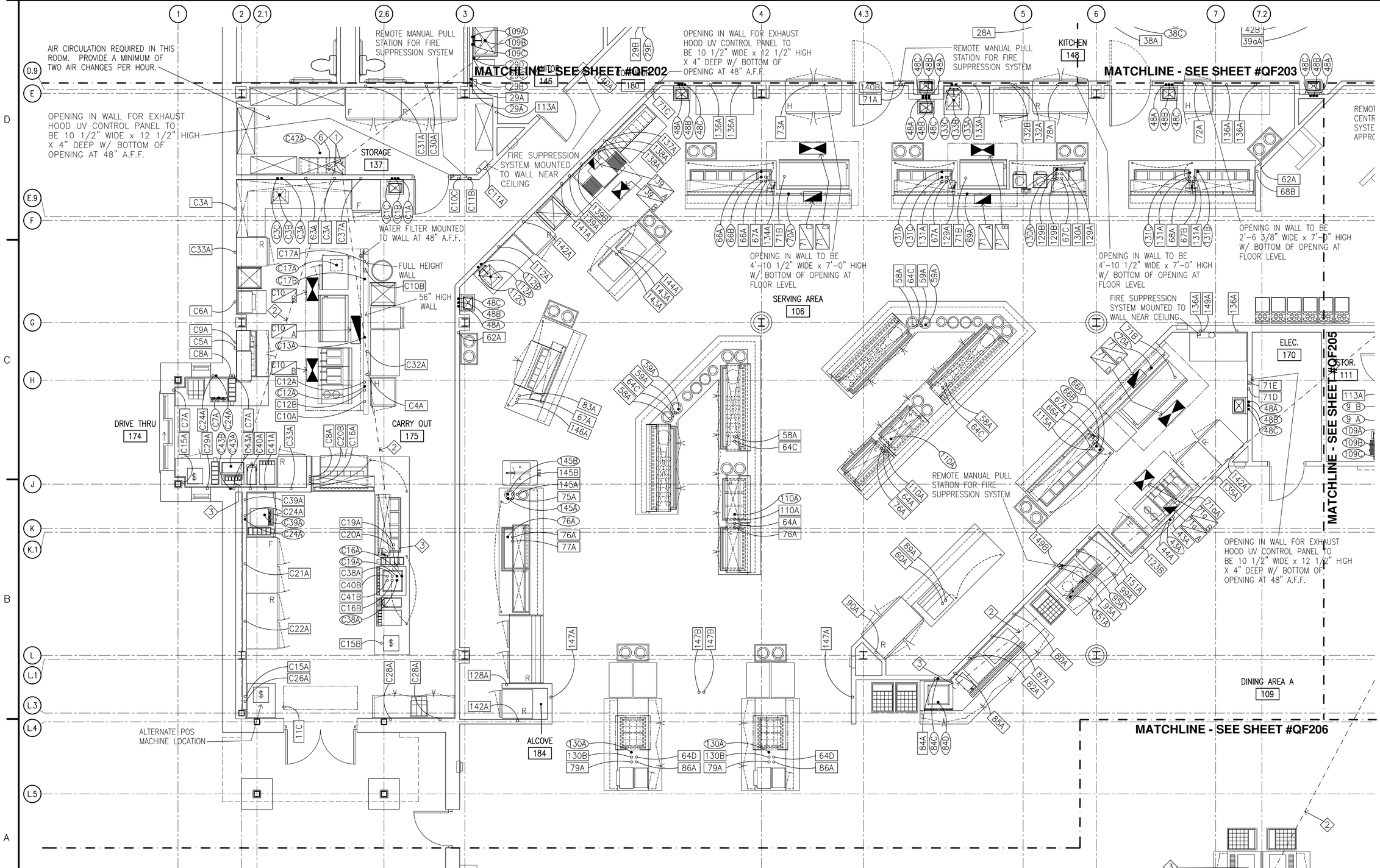

UTILITY REQUIREMENT PLAN - AREA 3

SCALE : 1/4"=1'-0"

US Army Corps of Engineers
Norfolk District

MARK	DATE	DESCRIPTION	BY	APP'D

DESIGNED: JK | CHECKED: JK | DATE: 12/11/09
DRAWN: JK, TJT | SUBMITTED: JK | SCALE: AS NOTED
PROJECT NO. | NORFOLK DISTRICT FILE NO. | SPECIFICATION NO.
DRAWING NO. QF204 | Plot scale: 1:1
Last saved: Oct 11-09
File name: QF204.DWG

NORFOLK DISTRICT
CORPS OF ENGINEERS
NORFOLK, VIRGINIA

NAO
CENTER OF STANDARDIZATION

US ARMY STANDARD DESIGN
1300 SOLDIER PERMANENT PARTY
DINING FACILITY

UTILITY REQUIREMENT PLAN - AREA 3

SHEET REFERENCE NUMBER
QF204
SHEET OF

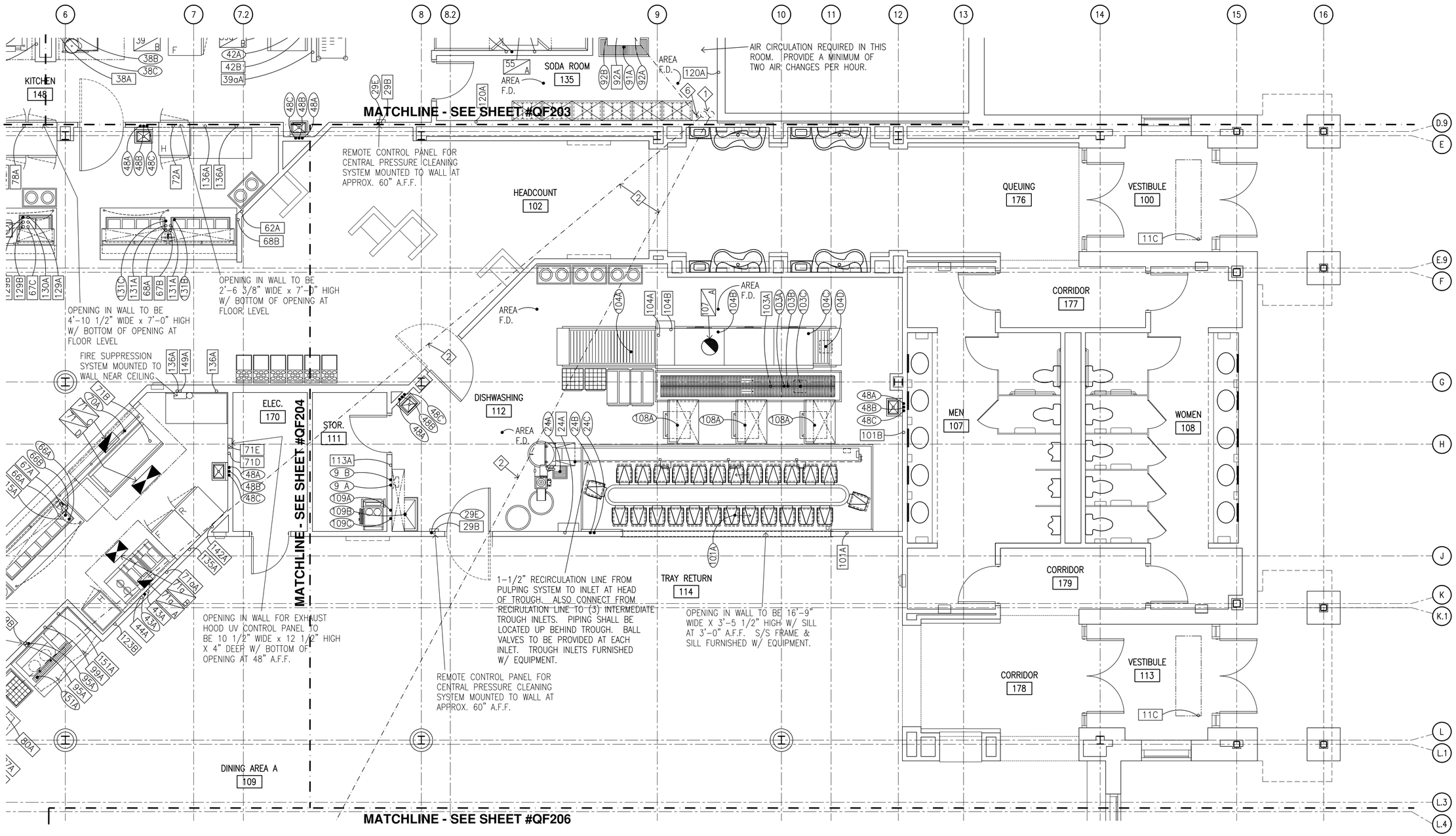

FOOD SERVICE PLAN - AREA 4

SCALE : 1/4"=1'-0"

US Army Corps of Engineers
Norfolk District

MARK	DATE	DESCRIPTION	BY	APP

DATE: 12/11/09
SCALE: AS NOTED
CHECKED: JK
SUBMITTED: JK
NORFOLK DISTRICT FILE NO. —
SPECIFICATION NO. —
Plot scale: 1:1
DESIGNED: JK
DRAWN: JK, TJT
PROJECT NO.
DRAWING NO. QF 205
Last revised: 12-11-09
File name: QF205.DWG

NORFOLK DISTRICT
CORPS OF ENGINEERS
NORFOLK, VIRGINIA

NAO
CENTER OF STANDARDIZATION

US ARMY STANDARD DESIGN
1300 SOLDIER PERMANENT PARTY
DINING FACILITY

FOOD SERVICE PLAN - AREA 4

SHEET REFERENCE NUMBER
QF205
SHEET OF

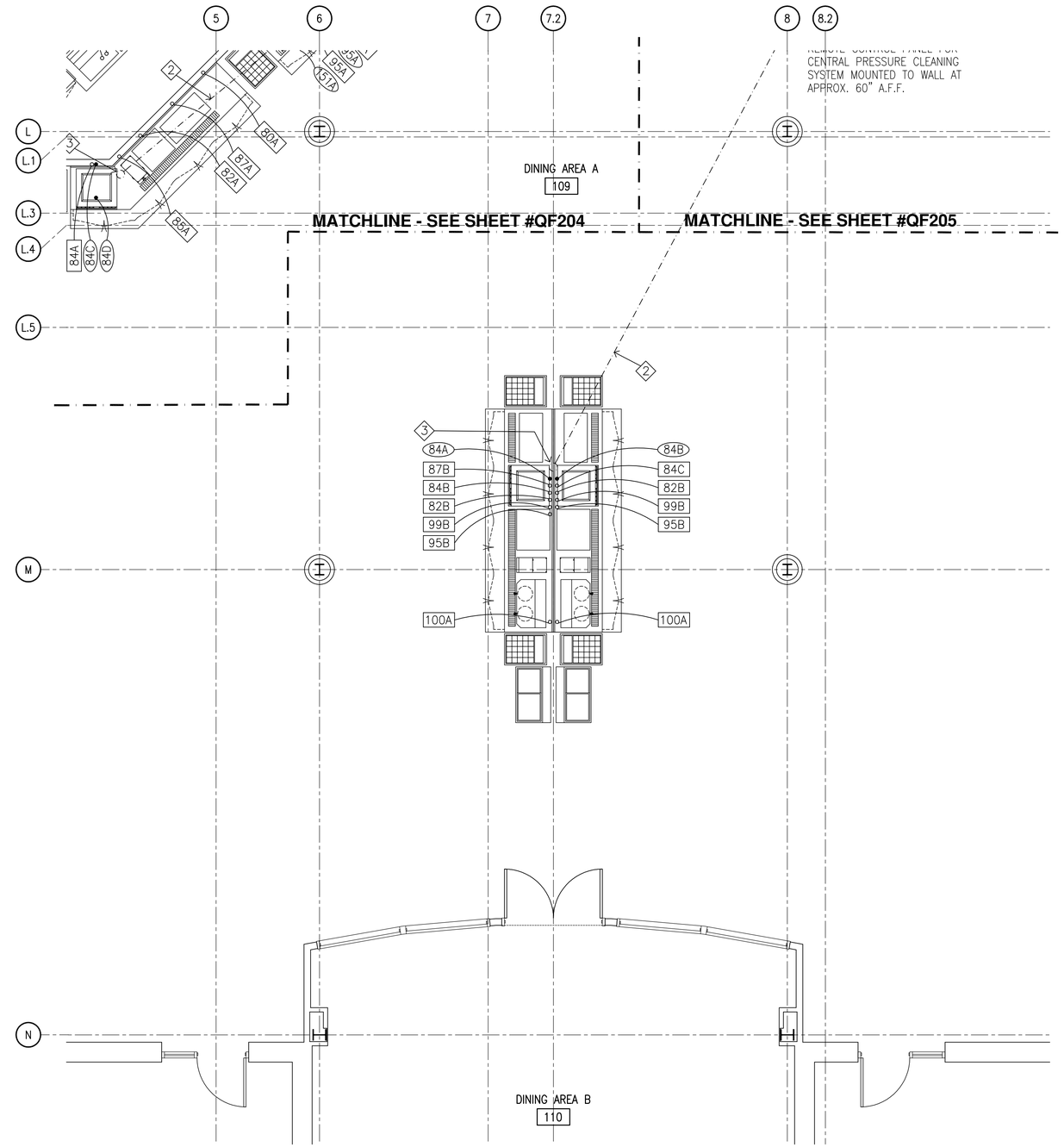

UTILITY REQUIREMENT PLAN - AREA 5

SCALE : 1/4"=1'-0"

US Army Corps of Engineers
Norfolk District

MARK	DATE	DESCRIPTION	BY	APP.

DESIGNED: JK
DRAWN: JK, TJT
PROJECT NO.
CHECKED: JK
SUBMITTED: JK
DATE: 11-13-09
SCALE: AS NOTED
NORFOLK DISTRICT FILE NO.
SPECIFICATION NO.
DRAWING NO. QF206
Plot scale: 1:1
Last worked on: 11-13-09
File name: QF206.DWG

NORFOLK DISTRICT
CORPS OF ENGINEERS
NORFOLK, VIRGINIA

1300 - PERSON PERMANENT PARTY
DINING FACILITY PROTOTYPE

UTILITY REQUIREMENT PLAN - AREA 5

SHEET REFERENCE NUMBER
QF206
SHEET OF

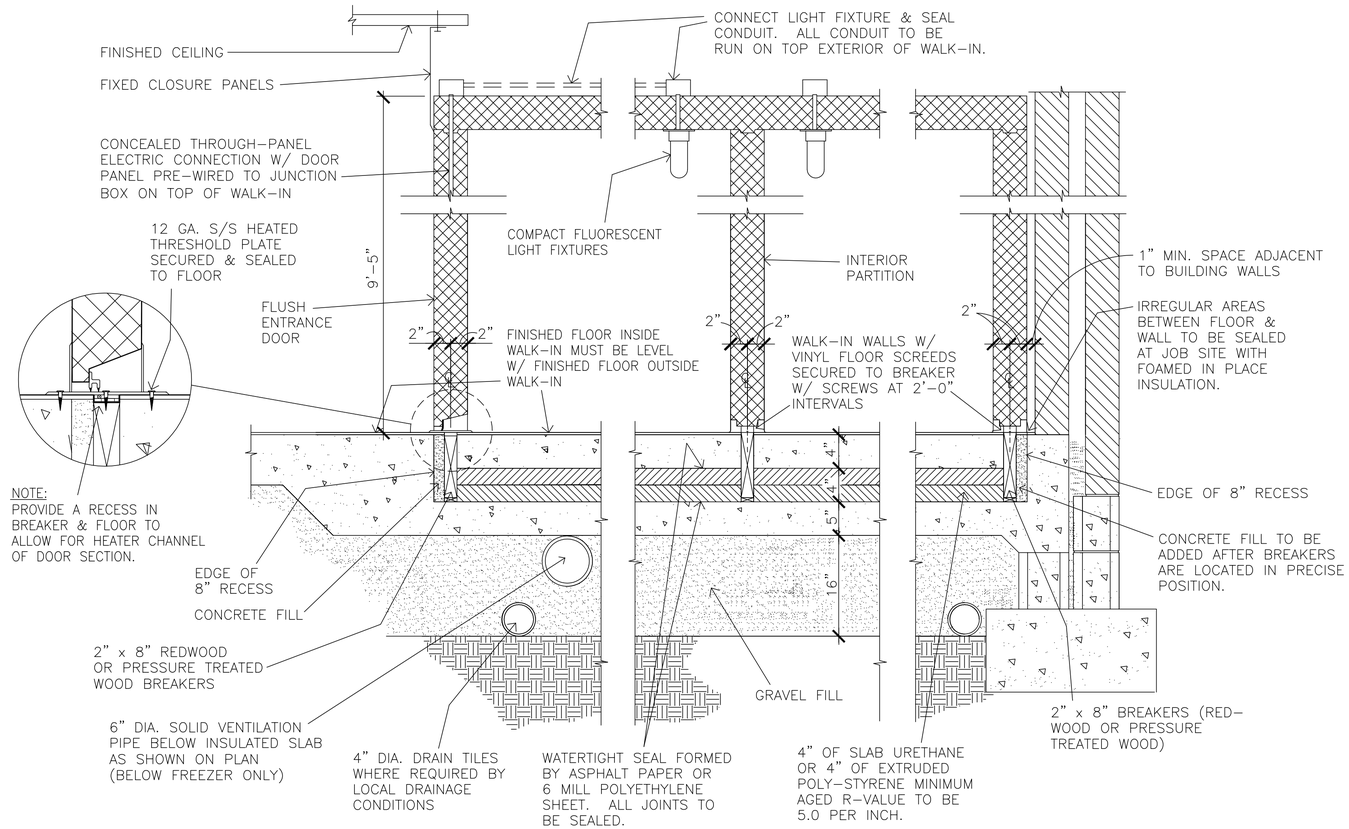

B1 / QF501 WALK-IN SECTION
SCALE: NONE

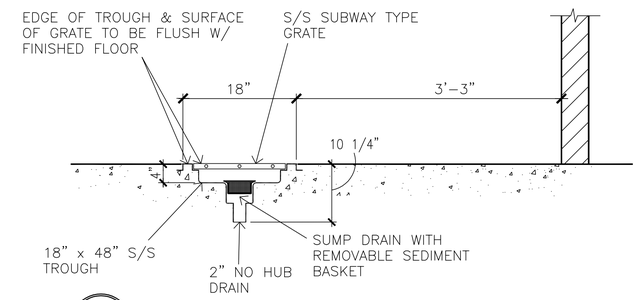

D4 / QF501 DRAIN TROUGH AT ICE MACHINE
SCALE: NONE

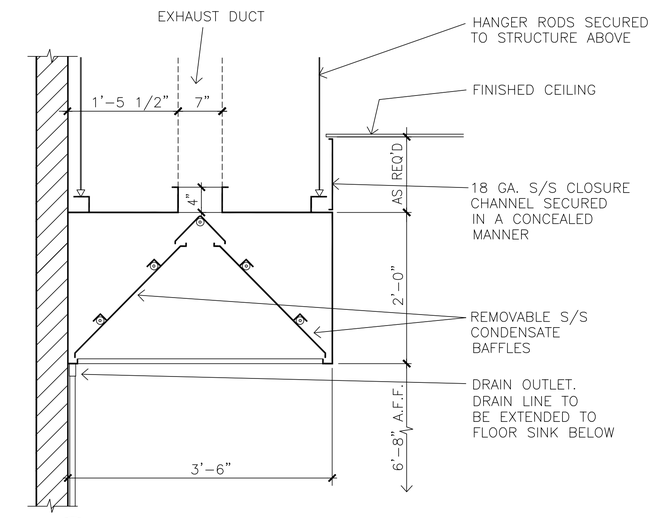

B4 / QF501 CONDENSATE HOOD SECTION
SCALE: NONE

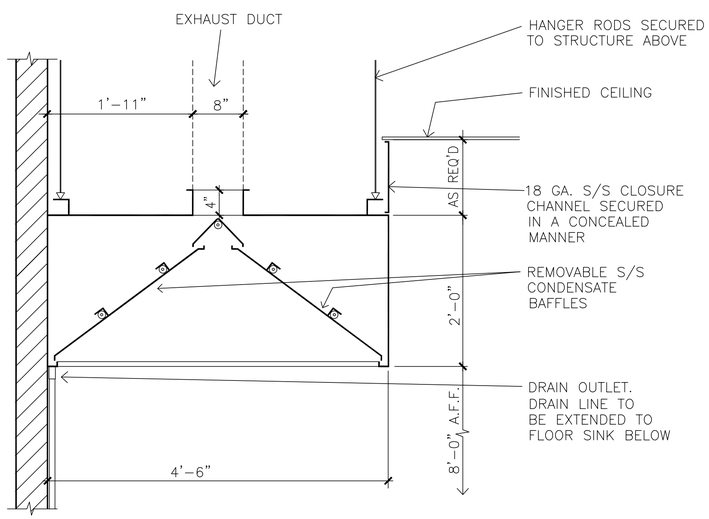

A1 / QF501 CONDENSATE HOOD SECTION
SCALE: NONE

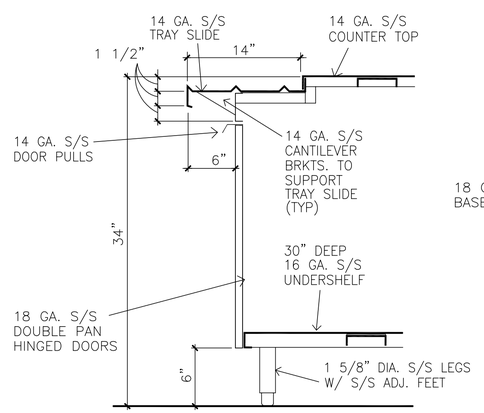

A2 / QF501 TYPICAL COUNTER SECTION
SCALE: NONE

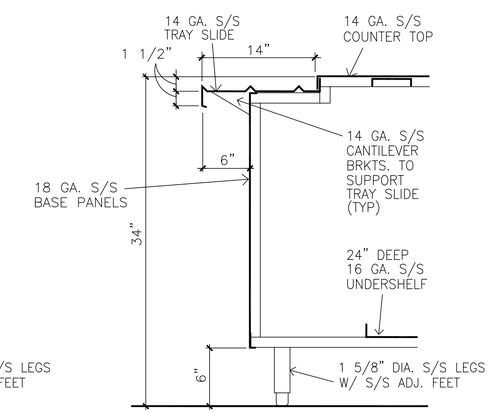

A3 / QF501 TYPICAL COUNTER SECTION
SCALE: NONE

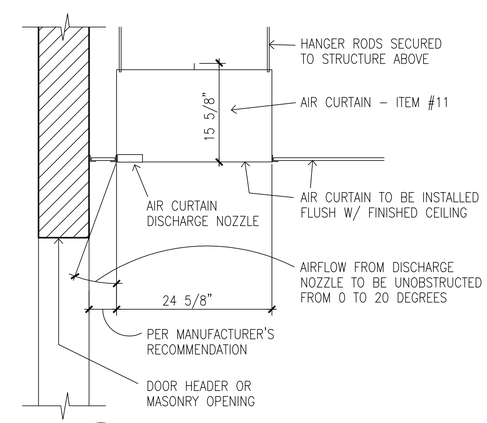

A4 / QF501 AIR CURTAIN SECTION
SCALE: NONE

US Army Corps of Engineers
Norfolk District

MARK	DATE	DESCRIPTION	BY	APP

DATE: 12/11/09
SCALE: AS NOTED
DESIGNED: JK
CHECKED: JK
DRAWN: JK,TJT
SUBMITTED: JK
PROJECT NO.
NORFOLK DISTRICT FILE NO.
SPECIFICATION NO.
DRAWING NO. QF501
Last saved: 12-11-09
File name: QF501.DWG
Plot scale: 1:1

NORFOLK DISTRICT
CORPS OF ENGINEERS
NORFOLK, VIRGINIA

NAO
CENTER OF STANDARDIZATION

US ARMY STANDARD DESIGN
1300 SOLDIER PERMANENT PARTY DINING FACILITY

FOOD SERVICE DETAILS

SHEET REFERENCE NUMBER
QF501
SHEET OF

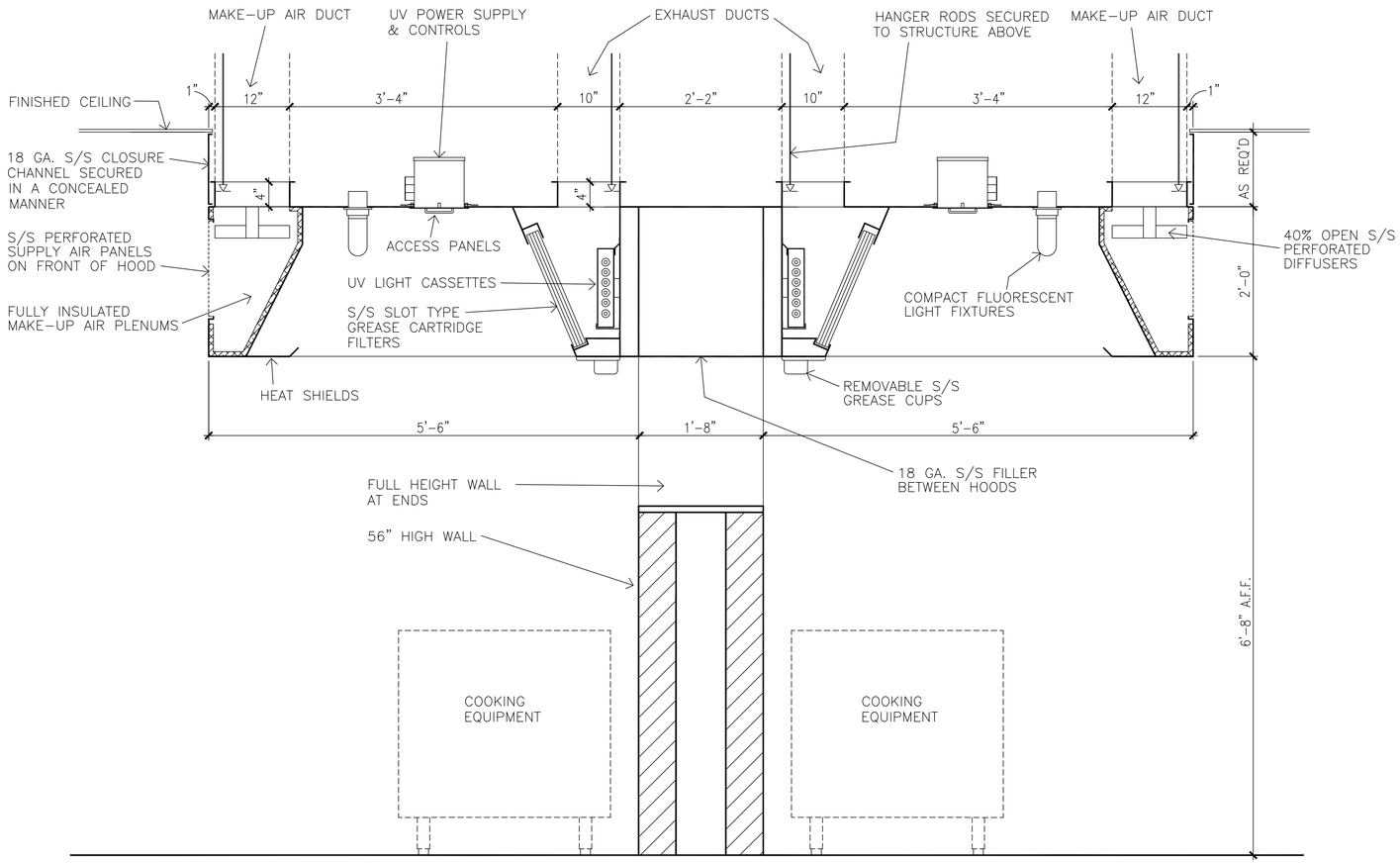

B1 / QF502 EXHAUST HOOD SECTION
SCALE: NONE (ITEM #39)

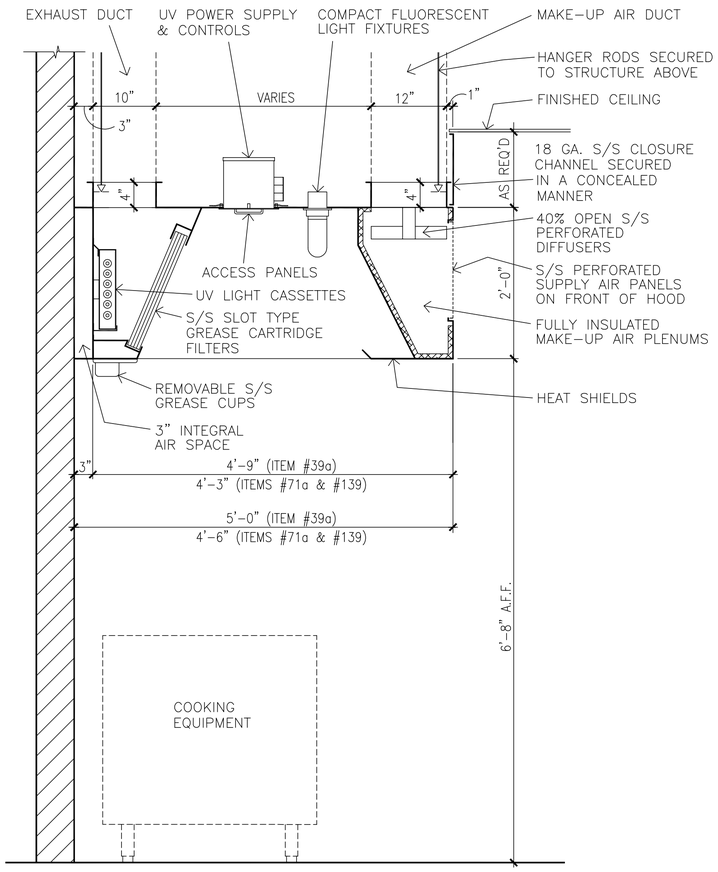

B4 / QF502 EXHAUST HOOD SECTION
SCALE: NONE (ITEMS #39a, #71a & #139)

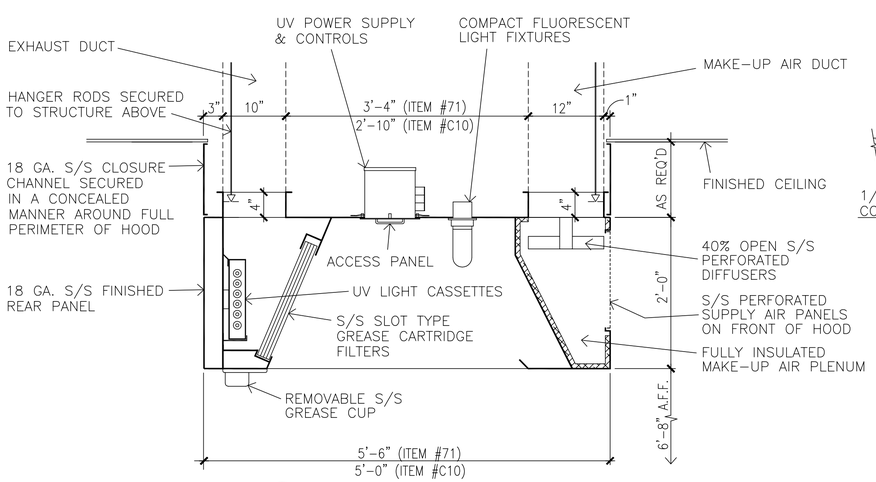

A1 / QF502 EXHAUST HOOD SECTION
SCALE: NONE (ITEMS #71 & #C10)

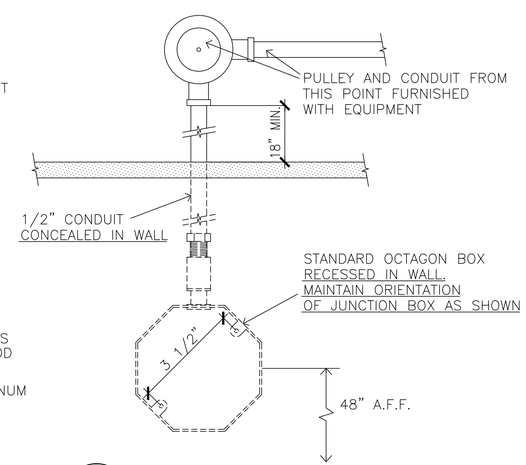

A2 / QF502 REMOTE PULL STATION
SCALE: NONE

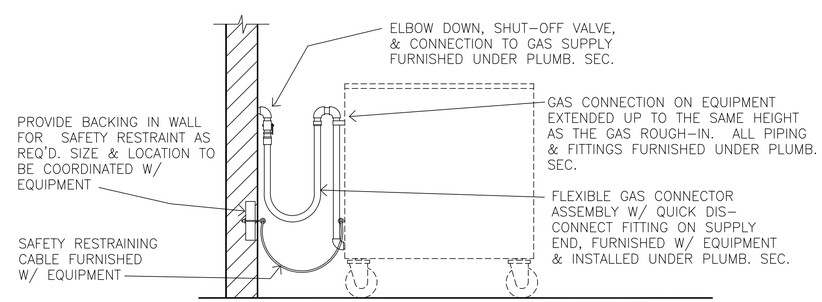

A4 / QF502 GAS CONNECTOR DETAIL
SCALE: NONE

US Army Corps of Engineers
Norfolk District

SYMBOL	DATE	DESCRIPTION	BY	APP

DATE: 12/11/09
SCALE: AS NOTED
CHECKED: JK
SUBMITTED: JK
NORFOLK DISTRICT FILE NO. —
SPECIFICATION NO. —
Plot scale: 1:1
DESIGNED: JK
DRAWN: JK, TJT
PROJECT NO.
DRAWING NO. QF502
Last revised: 12-11-09
File name: QF502.DWG

NORFOLK DISTRICT
CORPS OF ENGINEERS
NORFOLK, VIRGINIA

NAO
CENTER OF STANDARDIZATION

US ARMY STANDARD DESIGN
1300 SOLDIER PERMANENT PARTY
DINING FACILITY

FOOD SERVICE DETAILS

SHEET REFERENCE NUMBER
QF502
SHEET OF

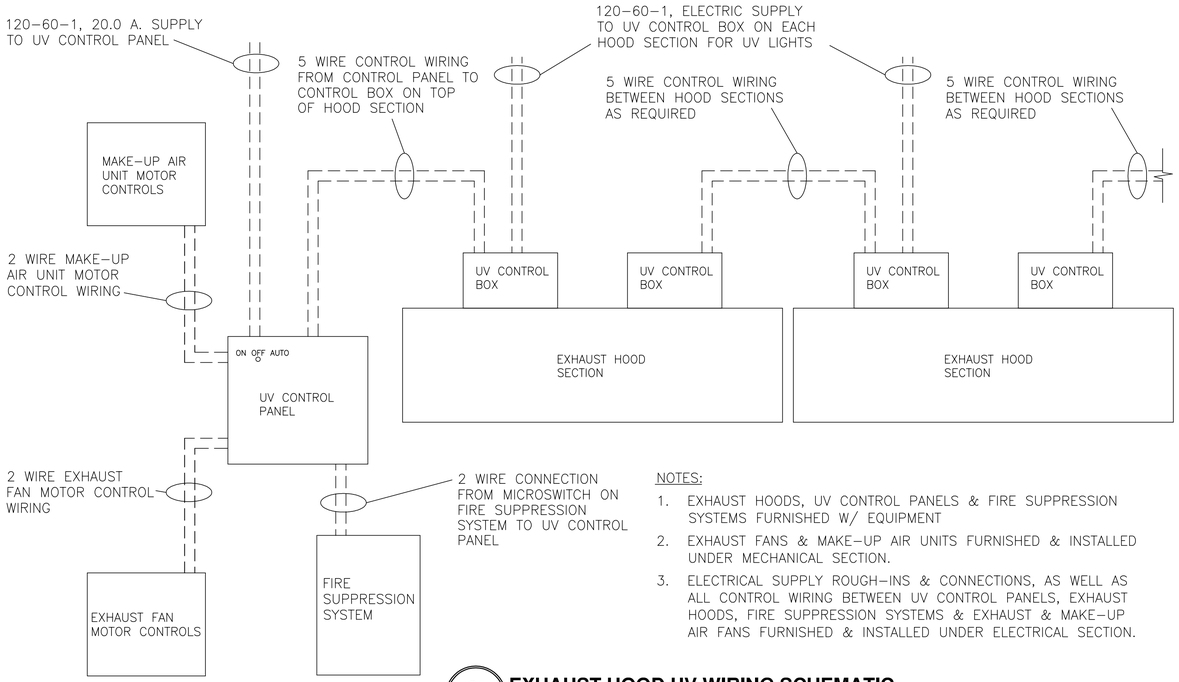

NOTES:

1. EXHAUST HOODS, UV CONTROL PANELS & FIRE SUPPRESSION SYSTEMS FURNISHED W/ EQUIPMENT
2. EXHAUST FANS & MAKE-UP AIR UNITS FURNISHED & INSTALLED UNDER MECHANICAL SECTION.
3. ELECTRICAL SUPPLY ROUGH-INS & CONNECTIONS, AS WELL AS ALL CONTROL WIRING BETWEEN UV CONTROL PANELS, EXHAUST HOODS, FIRE SUPPRESSION SYSTEMS & EXHAUST & MAKE-UP AIR FANS FURNISHED & INSTALLED UNDER ELECTRICAL SECTION.

C1 / QF503 EXHAUST HOOD UV WIRING SCHEMATIC
SCALE: NONE

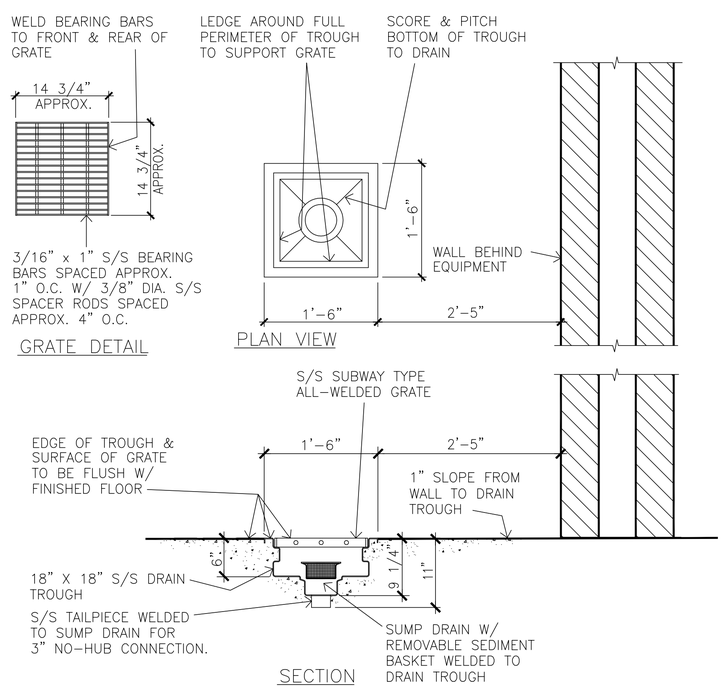

A1 / QF503 DRAIN TROUGH AT KETTLES
SCALE: NONE

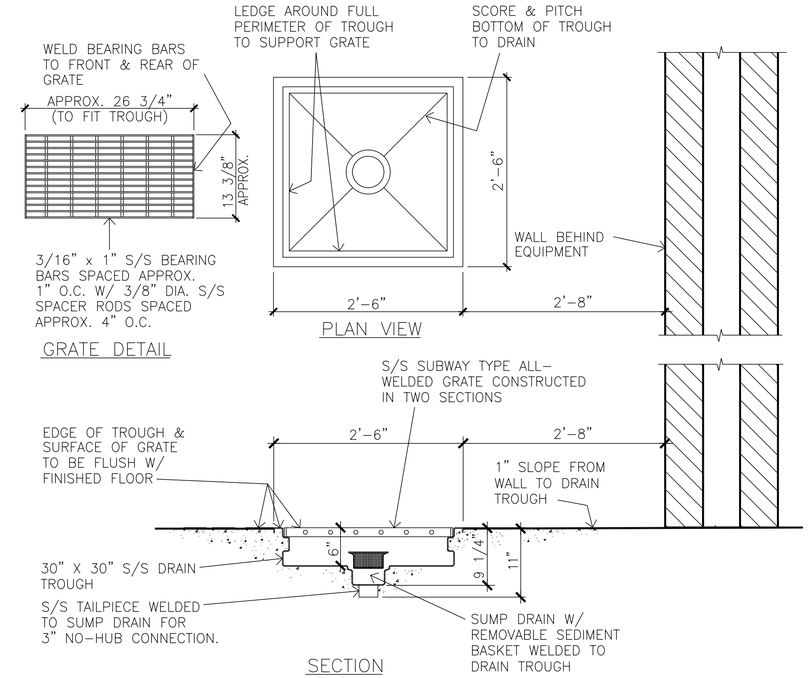

C3 / QF503 DRAIN TROUGH AT BRAISING PANS
SCALE: NONE

NOTE:

1. ALL PIPING, UNIONS, INSULATION & GATE OR BALL VALVES FURNISHED & INSTALLED UNDER PLUMBING SECTION.
2. PRESSURE RELIEF VALVE, TEMPERATURE/ PRESSURE GAUGES & SHOCK ABSORBER FURNISHED W/ BOOSTER HEATER & INSTALLED UNDER PLUMBING SECTION.

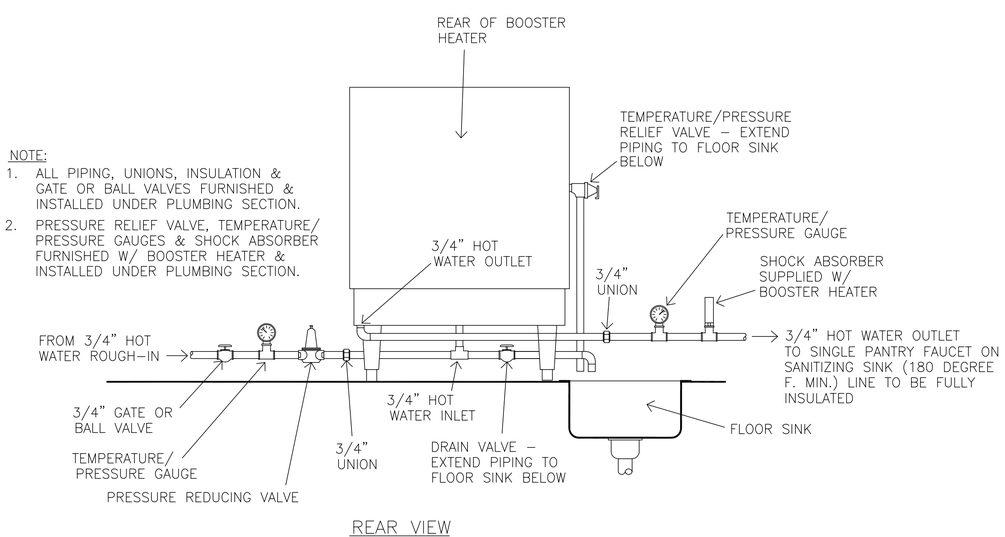

A3 / QF503 BOOSTER HEATER PIPING
SCALE: NONE

US Army Corps of Engineers
Norfolk District

MARK	DATE	DESCRIPTION	BY	APP

DESIGNED: JK
DRAWN: JK, TJT
PROJECT NO.
CHECKED: JK
SUBMITTED: JK
DATE: 12/11/09
SCALE: AS NOTED
NORFOLK DISTRICT FILE NO.
SPECIFICATION NO.
DRAWING NO. QF503
Last Modified: 12-11-09
File name: QF503.DWG
Plot scale: 1:1

NORFOLK DISTRICT
CORPS OF ENGINEERS
NORFOLK, VIRGINIA

NAO
CENTER OF STANDARDIZATION

US ARMY STANDARD DESIGN
1300 SOLDIER PERMANENT PARTY
DINING FACILITY

FOOD SERVICE DETAILS

SHEET REFERENCE NUMBER
QF503
SHEET OF

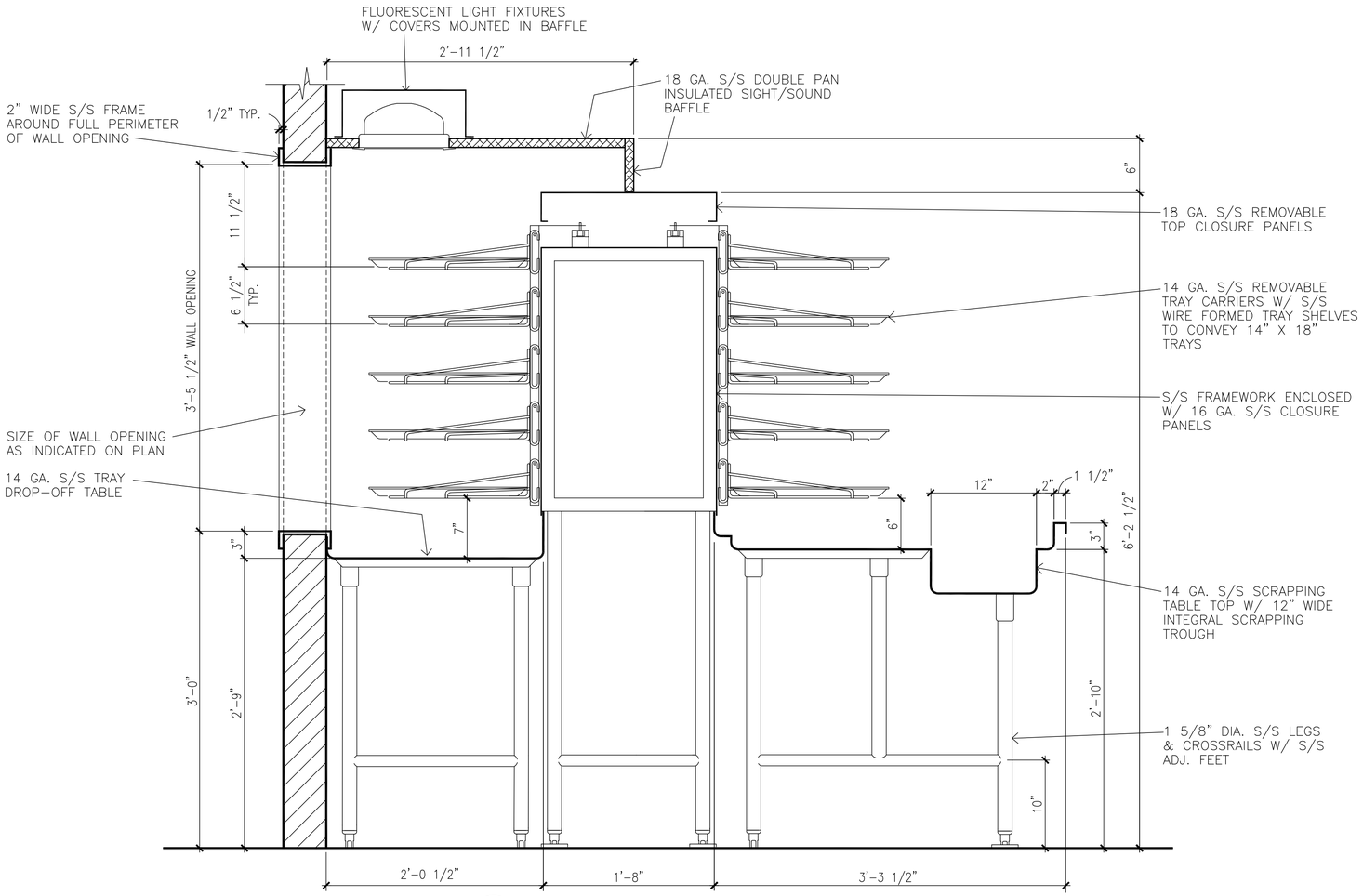

B1 / QF504 TRAY ACCUMULATOR SECTION
SCALE: NONE

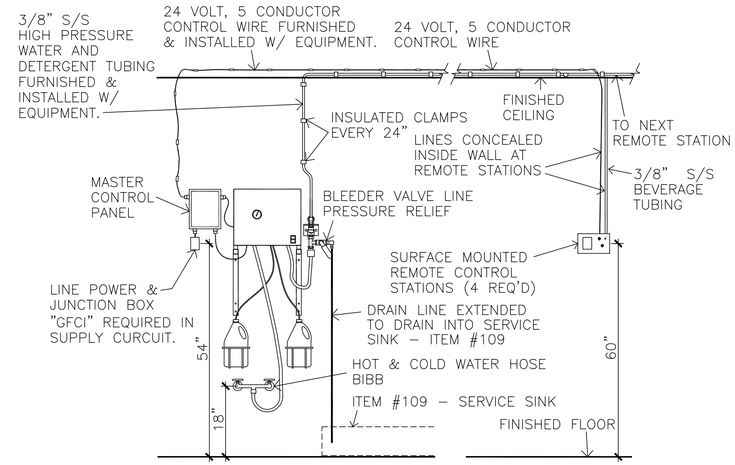

C4 / QF504 CENTRAL PRESSURE CLEANING SYSTEM
SCALE: NONE

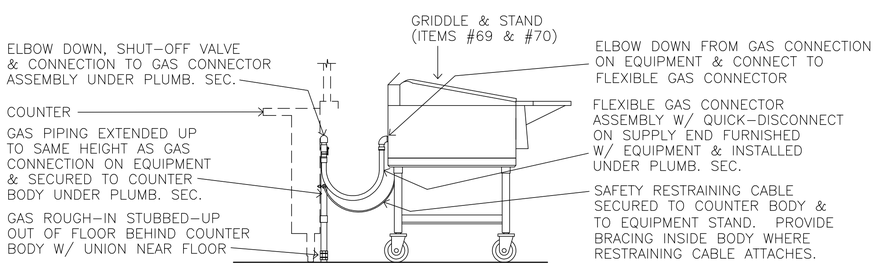

A1 / QF504 GAS CONNECTOR DETAIL
SCALE: NONE

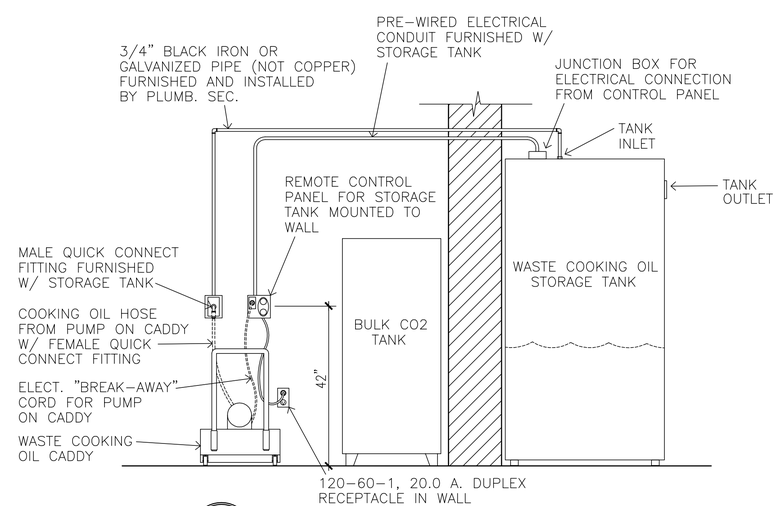

A3 / QF504 WASTE COOKING OIL STORAGE SYSTEM
SCALE: NONE

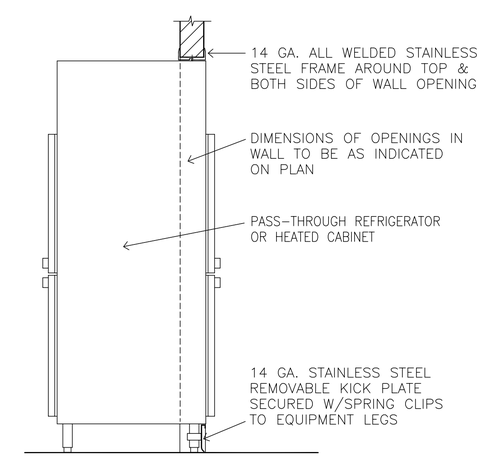

A4 / QF504 PASS THROUGH CABINET SECTION
SCALE: NONE

US Army Corps of Engineers
Norfolk District

MARK	DATE	DESCRIPTION	BY	APP

DATE: 12/11/09
SCALE: AS NOTED
CHECKED: JK
SUBMITTED: JK
NORFOLK DISTRICT FILE NO. —
SPECIFICATION NO. —
DESIGNED: JK
DRAWN: JK,TJT
PROJECT NO.
DRAWING NO. QF504
Last Revised on 12-11-09
File name: QF504.DWG
Plot scale: 1:1

NORFOLK DISTRICT
CORPS OF ENGINEERS
NORFOLK, VIRGINIA

NAO
CENTER OF STANDARDIZATION

US ARMY STANDARD DESIGN
1300 SOLDIER PERMANENT PARTY DINING FACILITY

FOOD SERVICE DETAILS

SHEET REFERENCE NUMBER
QF504
SHEET OF

ITEM NUMBER	QTY.	DESCRIPTION	EQUIP. CLASS	COMMENTS	ELECTRICAL SCHEDULE: ELEC. SYMBOL	VOLTS	PHASE	AMPS	CONN.	HT. A.F.F.	REMARKS	PLUMBING SCHEDULE: PLUMBING SYMBOL	H.W.	C.W.	WASTE SIZE	WASTE TYPE	GAS	GAS MBTU	HT. A.F.F.	REMARKS	VENTILATION SCHEDULE: VENTILATION SYMBOL	QTY.	EXHAUST COLLAR	EXHAUST CFM	SUPPLY COLLAR	SUPPLY CFM	STATIC PRESSURE	HT. A.F.F.
1	1	RECEIVING SCALE ON MOBILE STAND	C	DIAL INDICATING SCALE, 100 LB. CAPACITY																								
2	1	RECEIVING DESK	C	SINGLE PEDESTAL STEEL DESK	2A	120	1	10.0	D.R.	24"	CONVENIENCE RECEPTACLE																	
3	–	NOT USED	–																									
4	4	PLATFORM TRUCKS	C	28" X 60" ALUMINUM PLATFORM																								
5	66	SHELVING UNITS	C	24" X 48" MOBILE SHELVING UNITS																								
6	1	FREEZER COND. UNIT & EVAPORATORS	A		6A	208	3	29.9	J.B.	4"	CONNECT TO CONDENSING UNIT & FROM CONDENSING UNIT TO EVAPORATORS INSIDE WALK–IN – SEE WALK–IN NOTES																	
7	3	REFRIGERATOR COND. UNITS & EVAPORATORS	A		7A	208	3	4.2	J.B.	4"	CONNECT TO CONDENSING UNIT – SEE WALK–IN NOTES																	
					7B	208	3	8.2	J.B.	4"	CONNECT TO CONDENSING UNIT – SEE WALK–IN NOTES																	
					7C	120	1	1.8	J.B.	120"	CONNECT TO EVAPORATOR INSIDE WALK–IN																	
					7D	120	1	3.6	J.B.	120"	CONNECT TO EVAPORATOR INSIDE WALK–IN																	
8	4	DOORWAY CLOSURES	A																									
9	4	FAUCET HOSE STATIONS	A									9A	1/2"						48"	140 DEGREES F. MIN. – CONNECT TO MIXING VALVE, INLETS 6" O.C.								
												9B		1/2"					48"	CONNECT TO MIXING VALVE, INLETS 6" O.C.								
10	1	WALK–IN REFRIGERATORS & FREEZER	A		10A	120	1	8.0	J.B.	113"	CONNECT TO J.B. IN WALK–IN FOR P.W. DOOR LIGHT, DOOR HEATER & FIELD WIRED CENTER LIGHTS, PRESSURE RELIEF PORT & DRAIN LINE HEAT TAPE	10A			2"	F.F.D.			S.U.	EXTEND DRAIN LINE FROM 5 EVAPORATORS INSIDE WALK–IN								
					10B	120	1	5.0	J.B.	113"	CONNECT TO J.B. IN WALK–IN FOR P.W. DOOR LIGHT, DOOR HEATER & FIELD WIRED CENTER LIGHTS																	
					10C	120	1	6.0	J.B.	113"	CONNECT TO J.B. IN WALK–IN FOR P.W. DOOR LIGHT, DOOR HEATER & FIELD WIRED CENTER LIGHTS																	
11	5	AIR CURTAINS	A		11A	120	1	14.4	J.B.	104"	CONNECT TO DOOR SWITCHES, AND FROM SWITCHES TO AIR CURTAIN																	
					11B	120	1	7.2	J.B.	104"	CONNECT TO DOOR SWITCH, AND FROM SWITCH TO AIR CURTAIN																	
					11C	120	1	14.4	J.B.	–	J.B. ABOVE FINISHED CEILING. CONNECT TO AIR CURTAIN. ALSO INTERWIRE FROM AIR CURTAIN TO DOOR SWITCHES AND TO REMOTE SPEED SELECTOR SWITCH.																	
12	–	NOT USED	–																									
12a	2	CAN RACKS	C																									
13	1	DUNNAGE RACK	C																									
13a	4	CARTS	C	FIELD FEEDING AREA																								
14	1	VEGETABLE PREP SINK	A		14A	120	1	10.0	D.R.	52"	CONVENIENCE RECEPTACLE	14A	1/2"						18"	CONNECT TO FAUCET								
												14B			2"	12"X12" F.S.			S.U.	EXTEND DRAIN LINE FROM SINK								
												14C		1/2"					18"	CONNECT TO FAUCET								
												14D			3"	12"X12" F.S.			S.U.	EXTEND DRAIN LINE FROM 2 SINKS								
15	2	DISPOSERS	A		15A	208	3	8.4	J.B.	24"	CONNECT TO SWITCH & FROM SWITCH TO DISPOSER & SOLENOID VALVE	15A			3'	DIRECT			8"	CONNECT TO DISPOSER								
												15B		1/2"					–	CONNECT FROM PRE–RINSE SPRAY C.W. ROUGH–IN – SEE #52A								
16	1	REFRIGERATOR, ROLL–IN	A	TWO SECTION, W/ MOBILE RACKS	16A	120	1	11.4	J.B.	–	PROVIDE J.B. ABOVE CEILING & PENDANT CORD W/ D.R. AT 78" A.F.F.																	
17	5	TABLES	C		17A	120	1	15.0	J.B.	–	PROVIDE J.B. ABOVE CEILING & PENDANT CORD W/ CONVENIENCE D.R. AT 78" A.F.F.																	
18	1	TABLE	C																									
19	3	EQUIPMENT STANDS	C																									
20	2	STORAGE SHELVING SYSTEMS	A																									
21	3	TABLES W/ SINK	A		21A	120	1	15.0	J.B.	–	PROVIDE J.B. ABOVE CEILING & PENDANT CORD W/ CONVENIENCE D.R. AT 78" A.F.F.	21A		1/2"					S.U.	CONNECT TO FAUCET								
												21B			2"	12"X 12" F.S.			S.U.	EXTEND DRAIN LINE FROM SINK								
												21C	1/2"						S.U.	CONNECT TO FAUCET								
												21D	3/4"						S.U.	CONNECT TO TWO FAUCETS								
												21E			3"	12"X 12" F.S.			S.U.	EXTEND DRAIN LINES FROM TWO SINKS								
												21F		3/4"					S.U.	CONNECT TO TWO FAUCETS								
22	2	MEAT SLICING MACHINES	C		22A	120	1	6.0	J.B.	–	PROVIDE J.B. ABOVE CEILING & PENDANT CORD W/ D.R. AT 78" A.F.F.																	
23	1	VEGETABLE PEELING MACHINE	A	60 LB. W/ DISPOSER & STAND	23A	208	3	3.8	J.B.	24"	CONNECT TO PEELER	23A			2"	DIRECT			8"	CONNECT TO DISPOSER BELOW PEELER								
					23B	208	1	7.7	J.B.	24"	CONNECT TO DISPOSER BELOW PEELER	23B		1/2"					24"	CONNECT TO COMMON WATER CONNECTION ON PEELER/DISPOSER UNIT								

US Army Corps of Engineers
Norfolk District

MARK	DATE	DESCRIPTION	BY	APP

DESIGNED: JK | CHECKED: JK | DATE: 12/11/09
DRAWN: JK,TJT | SUBMITTED: JK | SCALE: NONE
PROJECT NO. | NORFOLK DISTRICT FILE NO. —
DRAWING NO. QF601 | SPECIFICATION NO.
Last Revised: 12-11-09 | Plot scale: 1:1
File name: QF601.DWG

NORFOLK DISTRICT
CORPS OF ENGINEERS
NORFOLK, VIRGINIA

NAO
CENTER OF STANDARDIZATION

US ARMY STANDARD DESIGN
1300 SOLDIER PERMANENT PARTY
DINING FACILITY

FOOD SERVICE EQUIPMENT SCHEDULE

SHEET REFERENCE NUMBER
QF601
SHEET OF

ITEM NUMBER	QTY.	DESCRIPTION	EQUIP. CLASS	COMMENTS	ELECTRICAL SCHEDULE: ELEC. SYMBOL	VOLTS	PHASE	AMPS	CONN.	HT. A.F.F.	REMARKS	PLUMBING SCHEDULE: PLUMBING SYMBOL	H.W.	C.W.	WASTE SIZE	WASTE TYPE	GAS	GAS MBTU	HT. A.F.F.	REMARKS	VENTILATION SCHEDULE: VENTILATION SYMBOL	QTY.	EXHAUST COLLAR	EXHAUST CFM	SUPPLY COLLAR	SUPPLY CFM	STATIC PRESSURE	HT. A.F.F.
24	1	WASTE PULPER	A	CLOSE–COUPLED PULPER & EXTRACTOR	24A	480	3	20.0	J.B.	72"	CONNECT TO WALL MOUNTED CONTROL PANEL & FROM CONTROL PANEL TO WASTE PULPER	24A			3"	12"X12" F.S.			S.U.	PROVIDE 3/4 GRATE & EXTEND DRAIN LINE FROM DRAIN VALVE ON PULPER								
												24B		1/2"					18"	CONNECT TO PULPER. 60 G.P.H. REQUIRED AT 30 P.S.I.								
												24C	1/2"						18"	CONNECT TO PULPER. 60 G.P.H. REQUIRED AT 30 P.S.I.								
25	1	FOOD PROCESSOR	C		25A	120	1	10.0	J.B.	–	PROVIDE J.B. ABOVE CEILING & PENDANT CORD W/ D.R. AT 78" A.F.F.																	
26	3	POT RACKS	A	OVERHEAD RACK MOUNTED ON ITEM #21																								
27	1	RANGE	A	6 BURNER, HEAVY DUTY	27A	120	1	1.0	D.R.	24"	ELECTRONIC IGNITION	27A					3/4"	250	30"	CONNECT TO GAS SUPPLY W/ FLEXIBLE CONNECTOR ASSEMBLY FURNISHED W/ EQUIPMENT. SEE DETAIL #A4/QF502								
28	2	BRAISING PANS	A	40 GALLONS	28A	120	1	10.0	D.R.	18"	BRAISING PAN CONTROLS	28A					3/4"	200	12"	CONNECT TO BRAISING PAN								
29	1	CENTRAL PRESSURE CLEANING SYSTEM	A		29A	208	1	9.0	J.B.	54"	CONNECT TO MASTER CONTROL PANEL FOR CENTRAL PRESSURE CLEANING SYSTEM (GFCI PROTECTION REQUIRED). ALSO EXTEND 24 VOLT CONTROL WIRING (FIVE CONDUCTOR, DOUBLE INSULATED) FROM MASTER CONTROL PANEL TO #29B REMOTE CONTROL PANELS (FOUR PLACES). SEE DETAIL #C4/QF504	29A	1/2"						18"	PROVIDE HOT & COLD WATER HOSE BIBB. SEE DETAIL #C4/QF504								
					29B				E.C.	60"	EXTEND 24 VOLT CONTROL WIRING (FIVE CONDUCTOR, DOUBLE INSULATED) FROM MASTER CONTROL PANEL ON CENTRAL PRESSURE CLEANING SYSTEM & CONNECT TO REMOTE CONTROL PANEL. SEE DETAIL #C4/QF504	29B		1/2"					18"	PROVIDE HOT & COLD WATER HOSE BIBB. SEE DETAIL #C4/QF504								
												29C			1/2"	INDIRECT			60"	EXTEND DRAIN LINE FOM BLEEDER VALVE LINE PRESSURE RELIEF VALVE TO DRAIN INTO SERVICE SINK – ITEM #109. SEE DETAIL #C4/QF504								
												29D							54"	EXTEND 3/8" STAINLESS STEEL HIGH PRESSURE WATER & DETERGENT TUBING FROM CENTRAL PRESSURE CLEANING SYSTEM TO HOSE OUTLETS AT REMOTE STATIONS #29E (4 PLACES). HIGH PRESSURE TUBING SHALL BE EXTENDED ABOVE FINISHED CEILING & SHALL BE SECURED W/ CUSHIONED STRAPS 24" ON CENTER. SEE DETAIL #C4/QF504								
												29E							60"	REMOTE OUTLET FOR CENTRAL PRESSURE CLEANING SYSTEM. EXTEND 3/8" STAINLESS STEEL HIGH PRESSURE WATER & DETERGENT TUBING FROM #29D. SEE DETAIL #C4/QF504								
30	2	FLOOR TROUGHS W/ GRATE	A									30A			3"	DIRECT			S.U.	CONNECT TO RECESSED TROUGH IN FLOOR – SEE DETAIL #C3/QF503								
31	1	FREEZER	A	TWO SECTION, REACH–IN	31A	120	1	14.9	J.B.	–	PROVIDE J.B. ABOVE CEILING & PENDANT CORD W/ D.R. AT 90" A.F.F. – NEMA #5–20P PLUG FURNISHED ON FREEZER																	
32	3	CONVECTION OVENS	A	DOUBLE DECK	32A	120	1	6.0+6.0	D.R.	48"	OVEN FAN MOTORS	32A					3/4"	120	30"	MANIFOLD TWO OVEN DECKS TOGETHER & CONNECT TO GAS SUPPLY W/ FLEXIBLE CONNECTOR ASSEMBLY FURNISHED W/ EQUIPMENT. SEE DETAIL #A4/QF502								
32a	1	COMBINATION OVEN/STEAMER	A	ROLL–IN	32aA	120	1	15.0	D.R.	48"		32aA					1"	215	18"	CONNECT TO COMBINATION OVEN/STEAMER								
												32aB		3/4"					18"	CONNECT TO CONDENSER INLET, & THROUGH WATER FILTER TO STEAM GENERATOR INLET. 40–50 P.S.I. REQUIRED. WATER FILTER FURNISHED WITH EQUIPMENT & MOUNTED TO WALL AT 48" A.F.F. BACKFLOW PREVENTER REQUIRED.								
												32aC			2"	12"X12" F.S.			S.U.	EXTEND DRAIN LINE FROM COMBINATION OVEN/STEAMER								
33	2	CAN OPENERS	C		–	120	1	1.2	–	–	PLUGS INTO #17A & #21A																	
34	1	MIXING MACHINE	A	60 QUART	34A	208	3	10	J.B.	–	PROVIDE J.B. ABOVE CEILING & PENDANT CORD W/ S.R. AT 78" A.F.F. ALSO FURNISH & INSTALL CORD & PLUG ON MIXER TO MATCH RECEPTACLE.																	
35	1	MIXING MACHINE	C	20 QUART	35A	120	1	8.2	J.B.	–	PROVIDE J.B. ABOVE CEILING & PENDANT CORD W/ D.R. AT 78" A.F.F.																	
36	2	KETTLES	A	40 GALLON	36A	120	1	10.0	D.R.	18"	KETTLE CONTROLS	36A					3/4"	140	18"	CONNECT TO KETTLE								
												36B		1/2"					36"	CONNECT TO FAUCET ON KETTLE								
												36C	1/2"						36"	CONNECT TO FAUCET ON KETTLE								
37	–	NOT USED	–																									
38	2	KETTLES WITH STAND	A	(2) 6 GALLON SELF–CONTAINED KETTLES WITH STAND	38A	480	3	19.6	J.B.	24"	CONNECT TO KETTLES	38A			2"	12"X12" F.S.			S.U.	EXTEND DRAIN LINE FROM TWO KETTLE STANDS								
												38B		3/4"					24"	CONNECT TO FAUCETS ON TWO KETTLE STANDS								
												38C	3/4"						24"	CONNECT TO FAUCETS ON TWO KETTLE STANDS								

US Army Corps of Engineers
Norfolk District

MARK	DATE	DESCRIPTION	BY	APP

DESIGNED: JK | CHECKED: JK | DATE: 12/11/09
DRAWN: JK,TJT | SUBMITTED: JK | SCALE: NONE
PROJECT NO. | NORFOLK DISTRICT FILE NO. —
DRAWING NO. QF602 | SPECIFICATION NO. —
Last Revised on 12-11-09 | Plot scale: 1:1
File name: QF602.DWG

NORFOLK DISTRICT
CORPS OF ENGINEERS
NORFOLK, VIRGINIA

NAO
CENTER OF STANDARDIZATION

US ARMY STANDARD DESIGN
1300 SOLDIER PERMANENT PARTY
DINING FACILITY

FOOD SERVICE EQUIPMENT SCHEDULE

SHEET REFERENCE NUMBER
QF602
SHEET OF

					ELECTRICAL SCHEDULE							PLUMBING SCHEDULE									VENTILATION SCHEDULE							
ITEM NUMBER	QTY.	DESCRIPTION	EQUIP. CLASS	COMMENTS	ELEC. SYMBOL	VOLTS	PHASE	AMPS	CONN.	HT. A.F.F.	REMARKS	PLUMBING SYMBOL	H.W.	C.W.	WASTE SIZE	WASTE TYPE	GAS	GAS MBTU	HT. A.F.F.	REMARKS	VENTILATION SYMBOL	QTY.	EXHAUST COLLAR	EXHAUST CFM	SUPPLY COLLAR	SUPPLY CFM	STATIC PRESSURE	HT. A.F.F.
39	1	EXHAUST HOOD – ISLAND TYPE	A	(4) UV TYPE EXHAUST HOOD SECTIONS	39A	120	1	4.0	J.B.	48"	PROVIDE SWITCH IN WALL AT 48" A.F.F. & EXTEND CONDUIT & WIRING IN A CONCEALED MANNER TO J.B.'S ON TOP EXTERIOR OF HOOD SECTIONS FOR COMPACT FLUORESCENT HOOD LIGHTS										39A	4	10"X25"	3060 EA.			1.60"	108"
					39B	120	1	12.0	E.C.	104"	CONNECT TO UV CONTROL BOX ON TOP OF EXHAUST HOOD SECTION FOR UV LIGHTS (4 PLACES). SEE UV WIRING SCHEMATIC DETAIL #C1/QF503										39B	8			12"X19"	1,225 EA.	0.20"	108"
					39C	120	1	20.0	E.C.	60"	CONNECT TO UV CONTROL PANEL. ALSO PROVIDE CONTROL INTERWIRING FROM CONTROL PANEL TO UV CONTROL BOXES ON TOP OF EXHAUST HOOD SECTIONS (ITEMS #39 AND #39a), TO EXHAUST FAN, TO MAKE-UP AIR UNIT & TO FIRE SUPPRESSION SYSTEM – ITEMS #41 & #41a AS REQUIRED. SEE UV WIRING SCHEMATIC DETAIL #C1/QF503																	
39a	1	EXHAUST HOOD – WALL TYPE	A	(2) UV TYPE EXHAUST HOOD SECTIONS	39aA	120	1	2.0	J.B.	48"	PROVIDE SWITCH IN WALL AT 48" A.F.F. & EXTEND CONDUIT & WIRING IN A CONCEALED MANNER TO J.B.'S ON TOP EXTERIOR OF HOOD SECTIONS FOR COMPACT FLUORESCENT HOOD LIGHTS										39aA	2	10"X15"	1,915 EA.			1.60"	108"
					39aB	120	1	12.0	J.B.	104"	CONNECT TO UV CONTROL BOX ON TOP OF EXHAUST HOOD SECTION FOR UV LIGHTS. SEE UV WIRING SCHEMATIC DETAIL #C1/QF503										39aB	2			12"X24"	1,530 EA.	0.20"	108"
40	2	FLOOR TROUGHS W/ GRATES	A									40A			3"	DIRECT			S.U.	CONNECT TO RECESSED TROUGH IN FLOOR – SEE DETAIL #A1/QF503								
41	1	FIRE SUPPRESSION SYSTEM	A	SERVES EXHAUST HOOD #39	41A	120	1	20.0	J.B.	96"	CONNECT TO MICROSWITCH ON WET CHEMICAL FIRE SUPPRESSION SYSTEM & RUN CONDUIT & WIRE IN A CONCEALED MANNER TO FUEL & POWER SHUT-OFF DEVICES FOR ALL APPLIANCES LOCATED UNDER THE EXHAUST HOOD. THIS SYSTEM SERVES ITEM #39. ALSO CONNECT TO BUILDING FIRE ALARM SYSTEM AS REQUIRED.																	
					41B				J.B.	48"	PROVIDE CONCEALED CONDUIT & RECESSED JUNCTION BOX IN WALL FOR REMOTE MANUAL PULL STATION FOR FIRE SUPPRESSION SYSTEM. SEE DETAIL #A2/QF502																	
41a	1	FIRE SUPPRESSION SYSTEM	A	SERVES EXHAUST HOOD #39a	41aA	120	1	20.0	J.B.	96"	CONNECT TO MICROSWITCH ON WET CHEMICAL FIRE SUPPRESSION SYSTEM & RUN CONDUIT & WIRE IN A CONCEALED MANNER TO FUEL & POWER SHUT-OFF DEVICES FOR ALL APPLIANCES LOCATED UNDER THE EXHAUST HOOD. THIS SYSTEM SERVES ITEM #39a. ALSO CONNECT TO BUILDING FIRE ALARM SYSTEM AS REQUIRED.																	
					41aB				J.B.	48"	PROVIDE CONCEALED CONDUIT & RECESSED JUNCTION BOX IN WALL FOR REMOTE MANUAL PULL STATION FOR FIRE SUPPRESSION SYSTEM. SEE DETAIL #A2/QF502																	
42	1	FRYERS & FILTER	A	BATTERY OF (3) 130 LB. FRYERS W/ FILTER SYSTEM	42A	120	1	1.0 + 1.0	D.R.	18"	CONTROLS FOR TWO FRYERS	42A					1 1/4"	503 TOTAL	30"	MANIFOLD 3 FRYERS TOGETHER & CONNECT TO GAS SUPPLY W/ FLEXIBLE CONNECTOR ASSEMBLY FURNISHED W/ EQUIPMENT. SEE DETAIL #A4/QF502								
					42B	120	1	1.0+5.6	D.R.	18"	CONTROLS FOR ONE FRYER & FILTER PUMP																	
43	1	FRYERS	A	BATTERY OF (2) 68 LB. FRYERS	43A	120	1	1.0 + 1.0	D.R.	18"	CONTROLS FOR TWO FRYERS	43A					1"	268 TOTAL	30"	MANIFOLD 2 FRYERS TOGETHER & CONNECT TO GAS SUPPLY W/ FLEXIBLE CONNECTOR ASSEMBLY FURNISHED W/ EQUIPMENT. SEE DETAIL #A4/QF502								
44	1	FILTER STATION	A	CONNECTED TO ITEM #43	44A	120	1	5.6 + 4.0	D.R.	18"	FILTER PUMP & HEAT LAMPS																	
45	3	POT FILLER/SPRAY HOSE ASSEMBLIES	A									45A	1/2"						48"	CONNECT TO WALL MOUNTED FAUCET, INLETS 8" O.C.								
												45B		1/2"					48"	CONNECT TO WALL MOUNTED FAUCET, INLETS 8" O.C.								
46	1	BAKERS TABLE	C		46A	120	1	15.0	J.B.	–	PROVIDE J.B. ABOVE CEILING & PENDANT CORD W/ CONVENIENCE D.R. AT 78" A.F.F.																	

US Army Corps of Engineers
Norfolk District

MARK	DATE	DESCRIPTION	BY	APP

DESIGNED: JK
DRAWN: JK,TJT
PROJECT NO.
CHECKED: JK
SUBMITTED: JK
DATE: 12/11/09
SCALE: NONE
NORFOLK DISTRICT FILE NO. —
SPECIFICATION NO. —
DRAWING NO. QF603
Last saved: 12-11-09
File name: QF603.DWG
Plot scale: 1:1

NORFOLK DISTRICT
CORPS OF ENGINEERS
NORFOLK, VIRGINIA

NAO
CENTER OF STANDARDIZATION

US ARMY STANDARD DESIGN
1300 SOLDIER PERMANENT PARTY
DINING FACILITY

FOOD SERVICE EQUIPMENT SCHEDULE

SHEET REFERENCE NUMBER
QF603
SHEET OF

					ELECTRICAL SCHEDULE							PLUMBING SCHEDULE									VENTILATION SCHEDULE							
ITEM NUMBER	QTY.	DESCRIPTION	EQUIP. CLASS	COMMENTS	ELEC. SYMBOL	VOLTS	PHASE	AMPS	CONN.	HT. A.F.F.	REMARKS	PLUMBING SYMBOL	H.W.	C.W.	WASTE SIZE	WASTE TYPE	GAS	GAS MBTU	HT. A.F.F.	REMARKS	VENTILATION SYMBOL	QTY.	EXHAUST COLLAR	EXHAUST CFM	SUPPLY COLLAR	SUPPLY CFM	STATIC PRESSURE	HT. A.F.F.
47	2	STEAMERS	A	W/(2) COMPARTMENTS, W/ (8) 2-1/2" DEEP PANS PER COMPARTMENT	47A	120	1	1.0	J.B.	18"	CONNECT TO STEAMER	47A			3"	12"X12" F.S.			S.U.	EXTEND DRAIN LINES FROM TWO STEAMERS								
												47B					1"	300	12"	CONNECT TO STEAMER								
												47C		1/2"					12"	CONNECT TO CONDENSER INLET ON STEAMER. 35-60 P.S.I. REQUIRED. BACKFLOW PREVENTER REQUIRED.								
												47D		3/4"					96"	CONNECT TO TWO WALL MOUNTED WATER FILTERS, AND FROM WATER FILTERS TO STEAM GENERATOR INLETS ON TWO STEAMERS. 35-60 P.S.I. REQUIRED. BACKFLOW PREVENTER REQUIRED. WATER FILTERS FURNISHED WITH EQUIPMENT.								
48	11	HAND SINKS	A									48A	1/2"						24"	CONNECT TO FAUCET								
												48B			1-1/2"	DIRECT			20"	CONNECT TO SINK								
												48C		1/2"					24"	CONNECT TO FAUCET								
49	3	INGREDIENT BINS, MOBILE	C																									
50	1	UTENSIL WASHER	A	W/ BUILT-IN BOOSTER HEATER	50A	480	3	22.0	J.B.	24"	CONNECT TO UTENSIL WASHER	50A			3"	12"X12" F.S.			S.U.	EXTEND DRAIN LINES FROM UTENSIL WASHER & FROM EXHAUST HOOD - ITEM #55								
					50B	480	3	34.0	J.B.	24"	CONNECT TO BOOSTER HEATER CONNECTION ON UTENSIL WASHER	50B	1"						12"	(140 DEGREES F. MIN.) CONNECT TO UTENSIL WASHER. 82.5 G.P.H. AT 20-22 P.S.I. REQUIRED								
51	1	POT & PAN SINK	A	W/ RECIRCULATION UNIT ON WASH COMPARTMENT	51A	480	3	11.6	J.B.	18"	CONNECT TO POWER SOAK CONTROL PANEL	51A	3/4"						18"	CONNECT TO FAUCET								
												51B		3/4"					18"	CONNECT TO FAUCET								
												51C			2"	DIRECT			15"	CONNECT DRAIN LINE TO 3 SINKS & EXTEND TO GREASE INTERCEPTOR AS REQ'D.								
51a	1	BOOSTER HEATER	A	TO HEAT WATER TO FILL RINSE COMPARTMENT	51aA	480	3	18.1	J.B.	12"	CONNECT TO BOOSTER HEATER	51aA	3/4"						18"	CONNECT TO BOOSTER HEATER. 140 DEGREES F. MIN. REQUIRED								
												51aB	3/4"						6"	H.W. OUTLET ON BOOSTER HEATER. CONNECT TO SINGLE PANTRY FAUCET OVER SANITIZING SINK COMPARTMENT W/ INSULATED LINE								
												51aC			2"	12"X12" F.S.			S.U.	EXTEND DRAIN LINES FROM BOOSTER HEATER, FROM SINK HEATER - ITEM #54 & FROM EXHAUST HOOD - ITEM #53								
52	2	PRE-RINSE SPRAYS	A									52A		3/4"					18"	CONNECT TO PRE-RINSE FAUCET & DISPOSER								
												52B	1/2"						18"	CONNECT TO PRE-RINSE FAUCET								
53	1	EXHAUST HOOD	A	CONDENSATE HOOD OVER RINSE COMPARTMENT								-			1/2"	INDIRECT			80"	EXTEND CONDENSATE DRAIN LINE FROM EXHAUST HOOD TO F.S. #51aC	53A	1	7" X 7"	600			0.25"	108"
54	1	SINK HEATER	A	TO MAINTAIN HEAT IN RINSE COMPARTMENT	54A	208	3	25.0	J.B.	12"	CONNECT TO SINK HEATER																	
55	1	EXHAUST HOOD	A	CONDENSATE HOOD OVER UTENSIL WASHER								-			1/2"	INDIRECT			96"	EXTEND CONDENSATE DRAIN LINE FROM EXHAUST HOOD TO F.S. #50A	55A	1	8" X 8"	750			0.25"	124"
56	10	POT & PAN RACKS	C																									
56a	1	MIXER ACCESSORY RACK	C		56aA						NOT USED																	
57	4	HEAD COUNT STATIONS	-	MILLWORK																								
57a	3	CASHIER STATIONS	A	FUTURE-NOT SHOWN																								
58	4	COLD PANS (6 WELLS)	A		58A	120	1	10.7	D.R.	4"		58A								NOT USED								
												58B								NOT USED								
59	4	SOUP WELLS, DROP-IN	A		59A	120	1	6.9+6.9	J.B.	S.U.	CONNECT TO TWO SOUP WELLS	59A			2"	F.F.D.			S.U.	EXTEND DRAIN LINES FROM DRAIN VALVES ON TWO SOUP WELLS AND TWO COLD PANS								
60	1	BREAD CABINET	A		60A	120	1	1.0	D.R.	4"																		
61	18	DISH DISPENSERS, DROP-IN	A																									
62	13	PLATE DISPENSERS	C		62A	120	1	10.0	D.R.	24"	CONVENIENCE RECEPTACLE																	
63	-	NOT USED	-		63A						NOT USED																	
64	10	SNEEZE GUARDS	A		64A	120	1	2.0	J.B.	4"	CONNECT TO FLUORESCENT LIGHTS IN TWO SNEEZE GUARDS																	
					64B						NOT USED																	
					64C	120	1	3.0	J.B.	4"	CONNECT TO FLUORESCENT LIGHTS IN SNEEZE GUARD																	
					64D	120	1	1.0	D.R.	0"	PROVIDE FLUSH WATERPROOF D.R. IN FLOOR																	
65	2	SELF SERVICE BARS	A																									
66	2	HOT FOOD WARMER (6 WELLS)	A		66A	208	1	24.5	S.R.	4"	NEMA #L6-50P PLUG FURNISHED ON EQUIPMENT	66A			2"	F.F.D.			S.U.	EXTEND DRAIN LINE FROM DRAIN VALVE ON HOT FOOD WARMER								
												66B	1/2"						S.U.	CONNECT TO FILL FAUCET								
67	7	COUNTER PROTECTORS	A		67A	120	1	3.0	J.B.	4"	CONNECT TO FLUORESCENT LIGHTS IN COUNTER PROTECTOR																	
					67B	120	1	6.0	J.B.	4"	CONNECT TO FLUORESCENT LIGHTS IN TWO COUNTER PROTECTORS																	
					67C	120	1	1.0	J.B.	4"	CONNECT TO FLUORESCENT LIGHTS IN COUNTER PROTECTOR																	

US Army Corps of Engineers
Norfolk District

MARK	DATE	DESCRIPTION	BY	APP

DATE: 12/11/09
SCALE: NONE
NORFOLK DISTRICT FILE NO. —
SPECIFICATION NO. —
Plot scale: 1:1

DESIGNED: JK
CHECKED: JK
DRAWN: JK, TJT
SUBMITTED: JK
PROJECT NO.
DRAWING NO. QF604
Last revised: 12-11-09
File name: QF604.DWG

NORFOLK DISTRICT
CORPS OF ENGINEERS
NORFOLK, VIRGINIA

NAO
CENTER OF STANDARDIZATION

US ARMY STANDARD DESIGN
1300 SOLDIER PERMANENT PARTY
DINING FACILITY

FOOD SERVICE EQUIPMENT SCHEDULE

SHEET REFERENCE NUMBER
QF604
SHEET OF

					ELECTRICAL SCHEDULE							PLUMBING SCHEDULE									VENTILATION SCHEDULE							
ITEM NUMBER	QTY.	DESCRIPTION	EQUIP. CLASS	COMMENTS	ELEC. SYMBOL	VOLTS	PHASE	AMPS	CONN.	HT. A.F.F.	REMARKS	PLUMBING SYMBOL	H.W.	C.W.	WASTE SIZE	WASTE TYPE	GAS	GAS MBTU	HT. A.F.F.	REMARKS	VENTILATION SYMBOL	QTY.	EXHAUST COLLAR	EXHAUST CFM	SUPPLY COLLAR	SUPPLY CFM	STATIC PRESSURE	HT. A.F.F.
68	1	ENTREE COUNTER	A		68A	120	1	10.0+10.0	J.B.	4"	CONNECT TO J.B. IN BASE FOR 2 P.W. CONVENIENCE D.R.'S IN COUNTER																	
					68B	120	1	10.0	D.R.	48"	CONVENIENCE RECEPTACLE																	
69	1	GRIDDLE & STAND	A									69A					3/4"	120	S.U.	EXTEND GAS PIPING UP TO HEIGHT OF CONNECTION ON GRIDDLE & CONNECT TO GAS SUPPLY W/ FLEXIBLE CONNECTOR ASSEMBLY FURNISHED W/ EQUIPMENT. SEE DETAIL #A1/QF504								
70	2	GRIDDLES & STANDS	A									70A					3/4"	180	S.U.	EXTEND GAS PIPING UP TO HEIGHT OF CONNECTION ON GRIDDLE & CONNECT TO GAS SUPPLY W/ FLEXIBLE CONNECTOR ASSEMBLY FURNISHED W/ EQUIPMENT. SEE DETAIL #A1/QF504								
70a	3	SPLASH GUARDS	A																									
71	3	EXHAUST HOODS – ISLAND TYPE	A	UV TYPE	71A	120	1	2.0 TOTAL	J.B.	48"	PROVIDE SWITCH IN WALL AT 48" A.F.F. & EXTEND CONDUIT & WIRING IN A CONCEALED MANNER TO J.B.'S ON TOP EXTERIOR OF HOODS OVER GRIDDLES AT COUNTERS #129 AND #134 FOR COMPACT FLUORESCENT HOOD LIGHTS										71A	1	10"X17"	2,100			1.60"	108"
					71B	120	1	6.0	E.C.	104"	CONNECT TO UV CONTROL BOX ON TOP OF EXHAUST HOOD FOR UV LIGHTS. SEE UV WIRING SCHEMATIC DETAIL #C1/QF503										71B	1			12"X24"	1,680	0.20"	108"
					71C	120	1	20.0	E.C.	60"	CONNECT TO UV CONTROL PANEL. ALSO PROVIDE CONTROL INTERWIRING FROM CONTROL PANEL TO UV CONTROL BOXES ON TOP OF TWO EXHAUST HOODS #71 OVER COUNTERS #129 AND #134, AND EXHAUST HOOD #139 (THREE HOODS), TO EXHAUST FAN(S), TO MAKE-UP AIR UNIT(S) & TO FIRE SUPPRESSION SYSTEM – ITEM #140 AS REQUIRED. SEE UV WIRING SCHEMATIC DETAIL #C1/QF503										71C	2	10"X19"	2,380 EA.			1.60"	108"
					71D	120	1	2.0 TOTAL	J.B.	48"	PROVIDE SWITCH IN WALL AT 48" A.F.F. & EXTEND CONDUIT & WIRING IN A CONCEALED MANNER TO J.B.'S ON TOP EXTERIOR OF HOOD OVER GRIDDLE AT COUNTER #115 & EXHAUST HOOD #71a FOR COMPACT FLUORESCENT HOOD LIGHTS										71D	2			12"X28"	1,905 EA.	0.20"	108"
					71E	120	1	20.0	E.C.	60"	CONNECT TO UV CONTROL PANEL. ALSO PROVIDE CONTROL INTERWIRING FROM CONTROL PANEL TO UV CONTROL BOXES ON TOP OF TWO EXHAUST HOOD #71 OVER COUNTER #115, & EXHAUST HOOD #71a (TWO HOODS), TO EXHAUST FAN(S), TO MAKE-UP AIR UNIT(S) & TO FIRE SUPPRESSION SYSTEM – ITEM #149 AS REQUIRED. SEE UV WIRING SCHEMATIC DETAIL #C1/QF503																	
71a	1	EXHAUST HOOD – WALL TYPE	A	UV TYPE	71aA	120	1	6.0	J.B.	108"	CONNECT TO UV CONTROL BOX ON TOP OF EXHAUST HOOD FOR UV LIGHTS. SEE UV WIRING SCHEMATIC DETAIL #C1/QF503										71aA	1	10"X12"	1,530			1.60"	108"
																					71aB	1			12"X19"	1,225	0.20"	108"
72	1	PASS THRU HEATED CABINET	A	ONE SECTION REACH-IN	72A	120/208	1	10.2	S.R.	88"	NEMA #L14-20P PLUG FURNISHED ON HEATED CABINET																	
73	1	PASS THRU HEATED CABINET	A	TWO SECTION REACH-IN	73A	120/208	1	19.8	J.B.	88"	CONNECT TO PASS-THRU HEATED CABINET																	
74	2	PASTRY STORAGE CABINETS	C																									
75	1	DESSERT COUNTER	A		75A	120	1	10.0+10.0	J.B.	4"	CONNECT TO J.B. IN BASE FOR TWO P.W. CONVENIENCE D.R.'S IN COUNTER																	
					75B						NOT USED																	
76	3	COLD PAN (3 WELLS)	A		76A	120	1	6.0	D.R.	4"		76A			2"	F.F.D.			S.U.	EXTEND DRAIN LINE FROM COLD PAN								
77	1	DOUBLE DECK DISPLAY STAND	A		77A	120	1	6.0	J.B.	4"	CONNECT TO FLUORESCENT LIGHTS IN DOUBLE DECK DISPLAY																	
78	1	PASS THRU REFRIGERATOR	A	TWO SECTION REACH-IN	78A	120	1	11.0	D.R.	88"																		
79	2	TOASTERS	C		79A	208	1	24.0	S.R.	0"	PROVIDE FLUSH WATERPROOF S.R. IN FLOOR. VERIFY ELECTRICAL REQUIREMENTS W/ GOVERNMENT FURNISHED EQUIPMENT																	
80	1	BEVERAGE COUNTER W/ TROUGH	A	NEAR SERVING AREA	80A	120	1	10.0	D.R.	48"	CONVENIENCE RECEPTACLE	–			–	INDIRECT			S.U.	EXTEND DRAIN LINE FROM DRIP TROUGH TO #84D								
81	2	BEVERAGE COUNTERS W/ TROUGHS	A	IN DINING ROOM								–				INDIRECT			32"	EXTEND DRAIN LINES FROM FOUR DRIP TROUGHS TO #84B								
82	3	JUICE DISPENSERS	C		82A	120	1	15.0	D.R.	48"	VERIFY ELECTRICAL REQUIREMENTS W/ GOVERNMENT FURNISHED EQUIPMENT	–		1/2"					34"	CONNECT C.W. FROM #84C								
					82B	120	1	15.0	D.R.	4"	VERIFY ELECTRICAL REQUIREMENTS W/ GOVERNMENT FURNISHED EQUIPMENT	–		1/2"					34"	CONNECT C.W. FROM #84A								
83	1	SANDWICH REFRIGERATOR	A		83A	120	1	6.3	D.R.	4"																		

US Army Corps of Engineers
Norfolk District

MARK	DATE	DESCRIPTION	BY	APP

DESIGNED: JK | CHECKED: JK | DATE: 12/11/09
DRAWN: JK,TJT | SUBMITTED: JK | SCALE: NONE
PROJECT NO. | NORFOLK DISTRICT FILE NO. —
DRAWING NO. QF605 | SPECIFICATION NO. —
Last Revised: Mar 2014 **09**
File name: **QF605.DWG** | Plot scale: 1:1

NORFOLK DISTRICT
CORPS OF ENGINEERS
NORFOLK, VIRGINIA

NAO
CENTER OF STANDARDIZATION

US ARMY STANDARD DESIGN
1300 SOLDIER PERMANENT PARTY
DINING FACILITY

FOOD SERVICE EQUIPMENT SCHEDULE

SHEET REFERENCE NUMBER
QF605
SHEET OF

					ELECTRICAL SCHEDULE							PLUMBING SCHEDULE									VENTILATION SCHEDULE							
ITEM NUMBER	QTY.	DESCRIPTION	EQUIP. CLASS	COMMENTS	ELEC. SYMBOL	VOLTS	PHASE	AMPS	CONN.	HT. A.F.F.	REMARKS	PLUMBING SYMBOL	H.W.	C.W.	WASTE SIZE	WASTE TYPE	GAS	GAS MBTU	HT. A.F.F.	REMARKS	VENTILATION SYMBOL	QTY.	EXHAUST COLLAR	EXHAUST CFM	SUPPLY COLLAR	SUPPLY CFM	STATIC PRESSURE	HT. A.F.F.
84	3	ICE/SODA DISPENSERS	L	MANUAL LOAD ICE DISPENSERS W/ SODA VALVES	84A	120	1	15.0	F.R.	18"	ICE/SODA DISPENSER & CARBONATOR IN BASE OF COUNTER. VERIFY ELECTRICAL REQUIREMENTS W/ VENDOR FURNISHED EQUIPMENT	84A		3/4"					S.U.	CONNECT TO CARBONATOR IN BASE OF COUNTER, TWO JUICE DISPENSERS – ITEM #82, TWO COFFEE BREWERS – ITEM #95 & TO TWO CAPPUCCINO DISPENSERS – ITEM #99. BACKFLOW PREVENTER REQUIRED ON CONNECTION TO CARBONATOR								
					84B	120	1	15.0	F.R.	4"	TWO ICE/SODA DISPENSERS. VERIFY ELECTRICAL REQUIREMENTS W/ VENDOR FURNISHED EQUIPMENT	84B			2"	F.F.D.			S.U.	EXTEND DRAIN LINES FROM TWO ICE/SODA DISPENSERS & FROM FOUR DRIP TROUGHS IN BEVERAGE COUNTER – ITEM #81								
					84C	120	1	10.0	D.R.	4"	CARBONATOR IN BASE OF COUNTER. VERIFY ELECTRICAL REQUIREMENTS W/ VENDOR FURNISHED EQUIPMENT	84C		3/4"					18"	CONNECT TO CARBONATOR IN BASE OF COUNTER, JUICE DISPENSER – ITEM #82 & TEA BREWER – ITEM #85. BACKFLOW PREVENTER REQUIRED ON CONNECTION TO CARBONATOR								
												84D			2"	F.F.D.			S.U.	EXTEND DRAIN LINES FROM ICE/SODA DISPENSER & FROM DRIP TROUGH IN BEVERAGE COUNTER – ITEM #80								
85	1	TEA BREWER	L		85A	120	1	15.0	D.R.	48"	VERIFY ELECTRICAL REQUIREMENTS W/ VENDOR FURNISHED EQUIPMENT	–		1/2"					34"	CONNECT C.W. FROM #84C								
86	2	MICROWAVE OVENS	C		86A	120	1	15.0	D.R.	0"	PROVIDE FLUSH WATERPROOF D.R. IN FLOOR. VERIFY ELECTRICAL REQUIREMENTS W/ GOVERNMENT FURNISHED EQUIPMENT																	
87	3	MILK DISPENSERS	C		87A	120	1	2.7	D.R.	48"	VERIFY ELECTRICAL REQUIREMENTS W/ GOVERNMENT FURNISHED EQUIPMENT																	
					87B	120	1	2.7+2.7	D.R.	4"	TWO MILK DISPENSERS. VERIFY ELECTRICAL REQUIREMENTS W/ GOVERNMENT FURNISHED EQUIPMENT																	
88	7	CUP & GLASS RACK DISPENSERS	C																									
89	1	BREAD COUNTER	A		89A	120	1	10.0+10.0	J.B.	4"	CONNECT TO J.B. IN BASE FOR TWO P.W. CONVENIENCE D.R.'S IN COUNTER																	
90	1	DISPLAY REFRIGERATOR	A		90A	120	1	11.0	D.R.	86"																		
91	3	FLOOR TROUGHS W/ GRATES	A									91A			2"	DIRECT			S.U.	CONNECT TO RECESSED TROUGH IN FLOOR – SEE DETAIL #D4/QF501								
92	3	ICE MAKING MACHINES	A		92A	208	3	13.0	J.B.	76"	CONNECT TO ICE MACHINE, AND FROM ICE MACHINE TO REMOTE CONDENSER ON BUILDING ROOF	92A			2"	F.F.D.			S.U.	EXTEND DRAIN LINES FROM ICE MAKER & ICE BIN								
												92B		1/2"					60"	CONNECT TO WATER FILTER & FROM WATER FILTER TO ICE MACHINE. BACKFLOW PREVENTER REQUIRED								
												92C			2"	F.F.D.			S.U.	EXTEND DRAIN LINES FROM TWO ICE MAKERS & TWO ICE BINS								
93	4	CEREAL DISPLAY RACKS	L																									
94	1	BULK CO2 TANK	L																									
95	3	COFFEE BREWERS	A	SATELLITE BREWER W/ (2) 3 GALLON REMOVABLE DISPENSERS	95A	120/208	3	38.3	J.B.	48"	CONNECT TO COFFEE BREWER	95A		1/2"					48"	CONNECT TO COFFEE BREWER & TO CAPPUCCINO DISPENSER – ITEM #99								
					95B	120/208	3	38.3	J.B.	4"	CONNECT TO COFFEE BREWER	–							34"	CONNECT C.W. FROM #84A								
96	1	COFFEE URN	A	TWIN 6 GALLON CAPACITY, FIELD FEEDING AREA	96A	120/208	1	36.0	J.B.	48"	CONNECT TO COFFEE URN	96A		1/2"					48"	CONNECT TO COFFEE URN								
97	1	URN STAND	A	FIELD FEEDING AREA								97A			2"	F.F.D.			S.U.	EXTEND DRAIN LINE FROM DRIP TROUGH IN URN STAND								
98	1	BULK JUICE DISPENSER	L	FIELD FEEDING AREA	98A	120	1	10.0	D.R.	24"	VERIFY ELECTRICAL REQUIREMENTS W/ VENDOR FURNISHED EQUIPMENT																	
99	3	CAPPUCCINO DISPENSERS	L		99A	120	1	15.0	D.R.	48"	VERIFY ELECTRICAL REQUIREMENTS W/ VENDOR FURNISHED EQUIPMENT	–							34"	CONNECT C.W. FROM #95A								
					99B	120	1	15.0	D.R.	4"	VERIFY ELECTRICAL REQUIREMENTS W/ VENDOR FURNISHED EQUIPMENT	–							34"	CONNECT C.W. FROM #84A								
100	2	ICE CREAM CABINETS	L		100A	120	1	10.0	D.R.	4"	VERIFY ELECTRICAL REQUIREMENTS W/ VENDOR FURNISHED EQUIPMENT																	
101	1	TRAY ACCUMULATOR	A	W/ SCRAPPING TROUGH	101A	208	3	1/2 H.P.	J.B.	24"	CONNECT TO CONTROL PANEL & FROM CONTROL PANEL TO REMOTE CONTROLS BELOW COUNTER TOP & TO TWO PHOTO ELECTRIC SWITCHES AT WALL OPENING.	101A			2"	F.F.D.				EXTEND DRAIN LINE FROM DRAIN IN COUNTER TOP								
					101B	120	1	15.0	J.B.	48"	PROVIDE SWITCH IN WALL AT 48" A.F.F. & EXTEND CONDUIT & WIRING IN A CONCEALED MANNER TO THREE FLUORESCENT LIGHTS PROVIDED ON TRAY ACCUMULATOR ABOVE TRAY RETURN OPENING																	
102	3	BRIDGES	A	PORTABLE																								
103	1	BUSSING CONVEYOR	A		103A	208	1	3/4 H.P.	J.B.	4"	CONNECT TO CONVEYOR CONTROL PANEL	103A		1/2"					S.U.	CONNECT TO BELT WASHER ON CONVEYOR								
												103B	1/2"						S.U.	CONNECT TO BELT WASHER ON CONVEYOR								
												103C			2"	12"X12" F.S.			S.U.	EXTEND DRAIN LINE FROM CONVEYOR								

US Army Corps of Engineers
Norfolk District

MARK	DATE	DESCRIPTION	BY	APP

DESIGNED: JK
DRAWN: JK,TJT
PROJECT NO.
CHECKED: JK
SUBMITTED: JK
DATE: 12/11/09
SCALE: NONE
NORFOLK DISTRICT FILE NO. —
SPECIFICATION NO.
DRAWING NO. QF606
Last Revised: 12-11-09
File name: QF606.DWG
Plot scale: 1:1

NORFOLK DISTRICT
CORPS OF ENGINEERS
NORFOLK, VIRGINIA

NAO
CENTER OF STANDARDIZATION

US ARMY STANDARD DESIGN
1300 SOLDIER PERMANENT PARTY
DINING FACILITY

FOOD SERVICE EQUIPMENT SCHEDULE

SHEET REFERENCE NUMBER
QF606
SHEET OF

ITEM NUMBER	QTY.	DESCRIPTION	EQUIP. CLASS	COMMENTS	ELECTRICAL SCHEDULE: ELEC. SYMBOL	VOLTS	PHASE	AMPS	CONN.	HT. A.F.F.	REMARKS	PLUMBING SCHEDULE: PLUMBING SYMBOL	H.W.	C.W.	WASTE SIZE	WASTE TYPE	GAS	GAS MBTU	HT. A.F.F.	REMARKS	VENTILATION SCHEDULE: VENTILATION SYMBOL	QTY.	EXHAUST COLLAR	EXHAUST CFM	SUPPLY COLLAR	SUPPLY CFM	STATIC PRESSURE	HT. A.F.F.
104	1	DISHWASHING MACHINE	A		104A	480	3	47.0	J.B.	4"	CONNECT TO BOOSTER HEATER CIRCUIT BREAKER PANEL BELOW DISHWASHER	104A			2"	F.F.D.			S.U.	EXTEND DRAIN LINE FROM BOOSTER HEATER TEMPERATURE/PRESSURE RELIEF VALVE ON DISHWASHER								
					104B	480	3	91.5	J.B.	–	J.B. AT CEILING – CONNECT TO CIRCUIT BREAKER PANEL ON TOP OF DISHWASHER	104B	1"						S.U.	140 DEG. MIN. – CONNECT TO COMMON H.W. CONNECTION ON DISHWASHER. 168 G.P.H. AT 20 P.S.I. FLOW PRESSURE REQUIRED								
												104C		1/2"					S.U.	CONNECT TO PRE–WASH TEMPERATURE CONTROL CONNECTION ON DISHWASHER								
												104D			3"	12"X12" F.S.			S.U.	EXTEND DRAIN LINE FROM DISHWASHER								
105	2	PULP CONTAINERS	C																									
106	2	RACK DOLLIES	C	FOR CUP & GLASS RACKS																								
107	1	VENT DUCT EXTENSION	A																		107A	1	16" DIA	750				6" ABOVE CEILING
108	3	SOAK SINKS	C									108A			2"	F.D.												
109	3	SERVICE SINKS (FLOOR MOUNTED)	A									109A		1/2"					36"	CONNECT TO FAUCET, INLETS 8" O.C.								
												109B			3"	DIRECT			S.U.	CONNECT TO SINK								
												109C	1/2"						36"	CONNECT TO FAUCET, INLETS 8" O.C.								
110	2	HOT FOOD WARMERS (3 WELLS)	A		110A	208	1	12.3	S.R.	4"	NEMA #L6–20P PLUG FURNISHED ON HOT FOOD WARMER	110A			2"	F.F.D.			S.U.	EXTEND DRAIN LINES FROM DRAIN VALVE ON HOT FOOD UNIT AND FROM COLD PAN								
111	–	NOT USED	–																									
112	1	WORK COUNTER	A		112A	120	1	10.0	D.R.	48"	CONVENIENCE RECEPTACLE	112A			2"	12"X12" F.S.			S.U.	EXTEND DRAIN LINE FROM SINK								
												112B		1/2"					18"	CONNECT TO FAUCET								
												112C	1/2"						18"	CONNECT TO FAUCET								
113	1	CLEAN/SANITIZING MACHINE	C		113A	120	1	15.0	D.R.	18"	LOCATED NEAR FAUCET HOSE STATIONS – ITEM #9 AND SERVICE SINKS – ITEM #109 (4 PLACES)																	
114	2	DISH CARTS	C																									
115	1	GRILL COUNTER	A		115A	120	1	10.0+10.0	J.B.	4"	CONNECT TO J.B. IN BASE FOR TWO P.W. CONVENIENCE D.R.'S IN COUNTER																	
116	1	WALL MOUNTED FLAT SHELF	A																									
117	6	TRAY DISPENSERS	C																									
118	7	BREAD RACKS	L																									
119	1	PROOFING CABINET	C		119A	120	1	16.6	J.B.	–	PROVIDE J.B. ABOVE CEILING & PENDANT CORD W/ D.R. AT 78" A.F.F.																	
120	6	SYRUP BOX RACKS	L		120A	120	1	10.0	D.R.	24"	CONVENIENCE RECEPTACLE																	
121	1	UTENSIL TABLE	A																									
122	5	OPEN RACKS	C																									
123	2	HEATED CABINETS, MOBILE	A		123A	120	1	16.0	J.B.	–	PROVIDE J.B. ABOVE CEILING & PENDANT CORD W/ D.R. AT 78" A.F.F. – NEMA #5–20P PLUG FURNISHED ON EQUIPMENT																	
					123B	120	1	16.0	D.R.	24"	NEMA #5–20P PLUG FURNISHED ON EQUIPMENT																	
124	4	UTILITY CARTS	C																									
125	1	COOK & HOLD CABINET	A		125A	208	1	28.8	J.B.	–	PROVIDE J.B. ABOVE CEILING & PENDANT CORD W/ S.R. AT 78" A.F.F. CORD & PLUG FURNISHED & INSTALLED BY ELECT. SEC.																	
126	1	PREP SINK	A		126A	120	1	15.0	J.B.	–	PROVIDE J.B. ABOVE CEILING & PENDANT CORD W/ CONVENIENCE D.R. AT 78" A.F.F.	126A	1/2"						S.U.	CONNECT TO FAUCET								
												126B		1/2"					S.U.	CONNECT TO FAUCET								
												126C			3"	12"X12" F.S.			S.U.	EXTEND DRAIN LINES FROM TWO SINKS								
127	2	INDUCTION COOK TOPS	A		–						PLUGS INTO RECEPTACLES ON ITEM #129																	
128	1	AIR SCREEN REFRIGERATOR	A		128A	120/208	1	15.0	S.R.	18"	NEMA #L14–20P PLUG FURNISHED ON AIR SCREEN REFRIGERATOR																	
129	1	ACTION STATION	A		129A	120	1	10.0 + 10.0	J.B.	4"	CONNECT TO J.B. IN BASE FOR 2 P.W. CONVENIENCE D.R.'S IN COUNTER																	
					129B	208	1	17.0	J.B.	4"	CONNECT TO J.B. IN BASE FOR P.W. S.R. ON COUNTER TOP FOR ITEM #127 – INDUCTION COOK TOPS																	
130	3	COLD PANS (2 WELLS)	A		130A	120	1	6.0	D.R.	4"		130A			2"	F.F.D.			S.U.	EXTEND DRAIN LINE FROM COLD PAN								
					130B	120	1	6.0	D.R.	0"	PROVIDE FLUSH WATERPROOF D.R. IN FLOOR																	
131	3	HOT FOOD WARMERS (4 WELLS)	A		131A	208	1	16.3	S.R.	4"	NEMA #L6–30P PLUG FURNISHED ON HOT FOOD WARMER	131A			2"	F.F.D.			S.U.	EXTEND DRAIN LINE FROM DRAIN VALVE ON HOT FOOD WARMER								
												131B			2"	F.F.D.			S.U.	EXTEND DRAIN LINES FROM DRAIN VALVES ON TWO HOT FOOD WARMERS								
												131C	1/2"						S.U.	CONNECT TO FILL FAUCET								
132	1	ROTISSERIE OVEN W/ VENTLESS HOOD	A		132A	208	3	34.0	S.R.	24"	ROTISSERIE OVEN AND VENTLESS HOOD. CORD AND PLUG FURNISHED AND INSTALLED BY ELECT. SEC.																	
					132B	120	1	14.6	D.R.	24"	NEMA #5–20P PLUG FURNISHED ON HEATED HOLDING CABINET																	
133	1	WORK COUNTER	A		133A	120	1	10.0	D.R.	48"	CONVENIENCE RECEPTACLE	133A		1/2"					18"	CONNECT TO FAUCET								
												133B			2"	12"X12" F.S.			S.U.	EXTEND DRAIN LINE FROM SINK								
												133C	1/2"						18"	CONNECT TO FAUCET								
134	1	GRILL COUNTER	A		134A	120	1	10.0 + 10.0	J.B.	4"	CONNECT TO J.B. IN BASE FOR 2 P.W. CONVENIENCE D.R.'S IN COUNTER																	
135	1	FREEZER	A		135A	120	1	11.5	D.R.	86"																		
136	3	WORK COUNTERS	A		136A	120	1	10.0	D.R.	48"	CONVENIENCE RECEPTACLE																	

US Army Corps of Engineers
Norfolk District

MARK	DATE	DESCRIPTION	BY	APP

DESIGNED: JK
DRAWN: JK,TJT
PROJECT NO.
CHECKED: JK
SUBMITTED: JK
DATE: 12/11/09
SCALE: NONE
NORFOLK DISTRICT FILE NO. —
SPECIFICATION NO. —
DRAWING NO. QF607
Last revised: Wed Dec 11 09
File name: QF607.DWG
Plot scale: 1:1

NORFOLK DISTRICT
CORPS OF ENGINEERS
NORFOLK, VIRGINIA

NAO
CENTER OF STANDARDIZATION

US ARMY STANDARD DESIGN
1300 SOLDIER PERMANENT PARTY
DINING FACILITY

FOOD SERVICE EQUIPMENT SCHEDULE

SHEET REFERENCE NUMBER
QF607
SHEET OF

					ELECTRICAL SCHEDULE							PLUMBING SCHEDULE									VENTILATION SCHEDULE							
ITEM NUMBER	QTY.	DESCRIPTION	EQUIP. CLASS	COMMENTS	ELEC. SYMBOL	VOLTS	PHASE	AMPS	CONN.	HT. A.F.F.	REMARKS	PLUMBING SYMBOL	H.W.	C.W.	WASTE SIZE	WASTE TYPE	GAS	GAS MBTU	HT. A.F.F.	REMARKS	VENTILATION SYMBOL	QTY.	EXHAUST COLLAR	EXHAUST CFM	SUPPLY COLLAR	SUPPLY CFM	STATIC PRESSURE	HT. A.F.F.
137	1	PIZZA ASSEMBLY TABLE	A		137A	120	1	15.0	D.R.	18"																		
138	1	CONVEYOR PIZZA OVEN	A	DOUBLE DECK	138A	208	1	29.0	S.R.	48"	NEMA #6-50P PLUG FURNISHED ON CONVEYOR PIZZA OVEN																	
139	1	EXHAUST HOOD – WALL TYPE	A	UV TYPE	139A	120	1	1.0	J.B.	48"	PROVIDE SWITCH IN WALL AT 48" A.F.F. & EXTEND CONDUIT & WIRING IN A CONCEALED MANNER TO J.B. ON TOP EXTERIOR OF EXHAUST HOOD FOR COMPACT FLUORESCENT HOOD LIGHTS										139A	1	10" X 8"	1,020			1.60"	108"
					139B	120	1	6.0	J.B.	108"	CONNECT TO UV CONTROL BOX ON TOP OF EXHAUST HOOD FOR UV LIGHTS. SEE UV WIRING SCHEMATIC DETAIL #C1/QF503										139B	1			12"X15"	815	0.20"	108"
140	1	FIRE SUPPRESSION SYSTEM	A	SERVES TWO EXHAUST HOODS #71 OVER ITEMS #129 & #134 & EXHAUST HOOD #139	140A	120	1	20.0	J.B.	96"	CONNECT TO MICROSWITCH ON WET CHEMICAL FIRE SUPPRESSION SYSTEM & RUN CONDUIT & WIRE IN A CONCEALED MANNER TO FUEL AND POWER SHUT-OFF DEVICES FOR ALL APPLIANCES LOCATED UNDER THE EXHAUST HOODS. THIS SYSTEM SERVES TWO EXHAUST HOODS #71 OVER ITEMS #129 & #134 & EXHAUST HOOD #139. ALSO CONNECT TO BUILDING FIRE ALARM SYSTEM AS REQUIRED.																		
					140B				J.B.	48"	PROVIDE CONCEALED CONDUIT & RECESSED JUNCTION BOX IN WALL FOR REMOTE MANUAL PULL STATION FOR FIRE SUPPRESSION SYSTEM. SEE DETAIL #A2/QF502																	
141	1	PIZZA OVEN COUNTER	A		141A	120	1	10.0	D.R.	48"	CONVENIENCE RECEPTACLE																	
142	3	REFRIGERATORS	A	ONE SECTION REACH-IN	142A	120	1	8.0	D.R.	86"																		
143	2	PIZZA WARMING CABINETS	A		143A	120	1	12.0	D.R.	4"																		
144	1	PIZZA COUNTER	A		144A	120	1	10.0 + 10.0	J.B.	4"	CONNECT TO J.B. IN BASE FOR 2 P.W. CONVENIENCE D.R.'S IN COUNTER																	
145	1	SOFT SERVE MACHINE	A		145A	208	3	14.0	S.R.	4"	ELECT. SEC. TO FURNISH AND INSTALL CORD & PLUG & CONNECT TO LEFT CONNECTION ON MACHINE	145A	1/2"						S.U.	PROVIDE FLEXIBLE HOSE W/ QUICK DISCONNECT & CONNECT TO FAUCET ON SOFT SERVE MACHINE								
					145B	208	3	13.0	S.R.	4"	ELECT. SEC. TO FURNISH AND INSTALL CORD & PLUG & CONNECT TO RIGHT CONNECTION ON MACHINE	145B		1/2"					S.U.	PROVIDE FLEXIBLE HOSE W/ QUICK DISCONNECT & CONNECT TO FAUCET ON SOFT SERVE MACHINE								
146	1	DELI COUNTER	A		146A	120	1	10.0+10.0	J.B.	4"	CONNECT TO J.B. IN BASE FOR 2 P.W. CONVENIENCE D.R.'S IN COUNTER																	
147	4	POS MACHINES	C	FUTURE-NOT SHOWN ON PLAN	147A	120	1	10.0	D.R.	18"	DEDICATED CIRCUIT REQUIRED. PROVIDE RECEPTACLE AND NETWORK CONNECTION FOR FUTURE INSTALLATION.																	
					147B	120	1	10.0	D.R.	0"	PROVIDE FLUSH WATERPROOF D.R. IN FLOOR. DEDICATED CIRCUIT REQUIRED. PROVIDE RECEPTACLE AND NETWORK CONNECTION FOR FUTURE INSTALLATION.																	
148	–	NOT USED	–																									
149	1	FIRE SUPPRESSION SYSTEM	A	SERVES EXHAUST HOOD #71 OVER ITEM #115 & EXHAUST HOOD #71a	149A	120	1	20.0	J.B.	96"	CONNECT TO MICROSWITCH ON WET CHEMICAL FIRE SUPPRESSION SYSTEM & RUN CONDUIT & WIRE IN A CONCEALED MANNER TO FUEL & POWER SHUT-OFF DEVICES FOR ALL APPLIANCES LOCATED UNDER THE EXHAUST HOODS. THIS SYSTEM SERVES EXHAUST HOOD #71 OVER ITEM #115 & EXHAUST HOOD #71a. ALSO CONNECT TO BUILDING FIRE ALARM SYSTEM AS REQUIRED.																		
					149B				J.B.	48"	PROVIDE CONCEALED CONDUIT & RECESSED JUNCTION BOX IN WALL FOR REMOTE MANUAL PULL STATION FOR FIRE SUPPRESSION SYSTEM. SEE DETAIL #A2/QF502																	
150	2	CONDIMENT COUNTERS	A																									
151	1	HOT BEVERAGE COUNTER	A		151A	120	1	10.0	D.R.	48"	CONVENIENCE RECEPTACLE	151A			2"	F.F.D.			S.U.	EXTEND DRAIN LINE FROM DRIP TROUGH IN COUNTER								
152	1	WASTE COOKING OIL STORAGE TANK	A		152A	120	1	20.0	D.R.	18"		152A							42"	PLUMB. SEC. TO FURNISH AND INSTALL 3/4" BLACK IRON OR GALVANIZED PIPING (NOT COPPER) FROM WASTE COOKING OIL STORAGE TANK TO REMOTE QUICK CONNECT FITTING – SEE DETAIL #A3/QF504.								
153	1	WASTE COOKING OIL CADDY	A																									
154	1	WORK TABLE	A		154A	120	1	10.0	D.R.	48"	CONVENIENCE RECEPTACLE	154A		1/2"					18"	CONNECT TO FAUCET								
												154B			2"	12"X12" F.S.			S.U.	EXTEND DRAIN LINE FROM SINK								
												154C	1/2"						18"	CONNECT TO FAUCET								
155	1	CAN CRUSHER	C		155A	120	1	20.0	D.R.	48"																		
156	4	RECYCLING BINS	C																									

US Army Corps of Engineers
Norfolk District

SYMBOL	DATE	DESCRIPTION	BY	APP

DATE: 12/11/09
SCALE: NONE
NORFOLK DISTRICT FILE NO. —
SPECIFICATION NO. —
Plot scale: 1:1
CHECKED: JK
SUBMITTED: JK
DESIGNED: JK
DRAWN: JK,TJT
PROJECT NO.
DRAWING NO. QF608
Last revised on 12-11-09
File name: QF608.DWG

NORFOLK DISTRICT
CORPS OF ENGINEERS
NORFOLK, VIRGINIA

NAO
CENTER OF STANDARDIZATION

US ARMY STANDARD DESIGN
1300 SOLDIER PERMANENT PARTY
DINING FACILITY

FOOD SERVICE EQUIPMENT SCHEDULE

SHEET REFERENCE NUMBER
QF608
SHEET OF

ITEM NUMBER	QTY.	DESCRIPTION	EQUIP. CLASS	COMMENTS	ELECTRICAL SCHEDULE: ELEC. SYMBOL	VOLTS	PHASE	AMPS	CONN.	HT. A.F.F.	REMARKS	PLUMBING SCHEDULE: PLUMBING SYMBOL	H.W.	C.W.	WASTE SIZE	WASTE TYPE	GAS	GAS MBTU	HT. A.F.F.	REMARKS	VENTILATION SCHEDULE: VENTILATION SYMBOL	QTY.	EXHAUST COLLAR	EXHAUST CFM	SUPPLY COLLAR	SUPPLY CFM	STATIC PRESSURE	HT. A.F.F.
CARRY OUT AREA																												
C1	1	HAND SINK	A									C1A		1/2"					24"	CONNECT TO FAUCET								
												C1B			1-1/2"	DIRECT			20"	CONNECT TO SINK								
												C1C	1/2"						24"	CONNECT TO FAUCET								
C2	5	SHELVING UNITS	C	18" X 48" MOBILE SHELVING UNITS																								
C3	1	WORK TABLE W/ SINK	A		C3A	120	1	10.0	D.R.	48"	CONVENIENCE RECEPTACLE	C3A		1/2"					18"	CONNECT TO FAUCET								
												C3B			2"	12"X12" F.S.			S.U.	EXTEND DRAIN LINE FROM SINK								
												C3C	1/2"						18"	CONNECT TO FAUCET								
C4	1	HEATED CABINET	A	PORTABLE	C4A	120	1	16.0	D.R.	24"	NEMA #5-20P PLUG FURNISHED ON HEATED CABINET																	
C5	1	FOOD WARMER, DRAWER TYPE	A	MOUNTED ON ELEVATED SHELF	C5A	208	1	17.3	S.R.	68"	NEMA #L6-30P PLUG FURNISHED ON FOOD WARMER																	
C6	1	CONVEYOR TOASTER & STAND	C		C6A	208	1	16.0	S.R.	24"	NEMA #6-20P PLUG FURNISHED ON CONVEYOR TOASTER. VERIFY ELECT. REQUIREMENTS W/ GOVERNMENT FURNISHED EQUIPMENT.																	
C7	1	WORK TABLE	A		C7A	120	1	10.0	D.R.	48"	CONVENIENCE RECEPTACLE	C7A			2"	F.F.D.			S.U.	EXTEND DRAIN LINE FROM DRIP TROUGH IN TABLE								
C8	2	SANDWICH REFRIGERATORS	A		C8A	120	1	6.3	D.R.	18"																		
C9	1	MICROWAVE OVEN	C	MOUNTED ON ELEVATED SHELF	C9A	120	1	15.0	D.R.	68"	VERIFY ELECTRICAL REQUIREMENTS W/ GOVERNMENT FURNISHED EQUIPMENT																	
C10	1	EXHAUST HOOD - WALL TYPE	A	(1) SECTION UV TYPE	C10A	120	1	2.0	J.B.	48"	PROVIDE SWITCH IN WALL AT 48" A.F.F. & EXTEND CONDUIT & WIRING IN A CONCEALED MANNER TO J.B. ON TOP EXTERIOR OF HOOD FOR COMPACT FLUORESCENT HOOD LIGHTS									C10A	1	10"X29"	3,570			1.60"	108"
					C10B	120	1	12.0	J.B.	108"	CONNECT TO UV CONTROL BOX ON TOP OF EXHAUST HOOD SECTION FOR UV LIGHTS. SEE UV WIRING SCHEMATIC DETAIL #C1/QF503									C10B	2			12"X24"	1,430 EA.	0.20"	108"
					C10C	120	1	20.0	E.C.	60"	CONNECT TO UV CONTROL PANEL. ALSO PROVIDE CONTROL INTERWIRING FROM CONTROL PANEL TO UV CONTROL BOX ON TOP OF EXHAUST HOOD, TO EXHAUST FAN, TO MAKE-UP AIR UNIT & TO FIRE SUPPRESSION SYSTEM - ITEM #C11 AS REQUIRED. SEE UV WIRING SCHEMATIC DETAIL #C1/QF503																
C11	1	FIRE SUPPRESSION SYSTEM	A	SERVES EXHAUST HOOD #C10	C11A	120	1	20.0	J.B.	96"	CONNECT TO MICROSWITCH ON WET CHEMICAL FIRE SUPPRESSION SYSTEM & RUN CONDUIT & WIRE IN A CONCEALED MANNER TO FUEL & POWER SHUT-OFF DEVICES FOR ALL APPLIANCES LOCATED UNDER THE EXHAUST HOOD. THIS SYSTEM SERVES ITEM #C10. ALSO CONNECT TO BUILDING FIRE ALARM SYSTEM AS REQUIRED.																
					C11B				J.B.	48"	PROVIDE CONCEALED CONDUIT & RECESSED JUNCTION BOX IN WALL FOR REMOTE MANUAL PULL STATION FOR FIRE SUPPRESSION SYSTEM. SEE DETAIL #A2/QF502																	
C12	2	FRYERS W/ FILTER	A		C12A	120	1	1.0 + 1.0	D.R.	18"	FRYER CONTROLS	C12A					1"	268 TOTAL	30"	MANIFOLD 2 FRYERS TOGETHER & CONNECT TO GAS SUPPLY W/ FLEXIBLE CONNECTOR ASSEMBLY FURNISHED W/ EQUIPMENT. SEE DETAIL #A4/QF502								
					C12B	120	1	5.6+4.0	D.R.	18"	FILTER PUMP & HEAT LAMPS																	
C13	1	GRIDDLE & STAND	A									C13A					3/4"	120	30"	CONNECT TO GAS SUPPLY W/ FLEXIBLE CONNECTOR ASSEMBLY FURNISHED W/ EQUIPMENT. SEE DETAIL #A4/QF502								
C14	1	BREAD RACK	L																									
C15	2	POS MACHINES	C		C15A	120	1	10.0	D.R.	48"	DEDICATED CIRCUIT REQUIRED. ALSO PROVIDE NETWORK CONNECTION																	
					C15B	120	1	10.0	D.R.	4"	DEDICATED CIRCUIT REQUIRED. ALSO PROVIDE NETWORK CONNECTION																	
C16	1	SERVING COUNTER	A		C16A	120	1	10.0 + 10.0	J.B.	18"	CONNECT TO J.B. IN BASE FOR 2 P.W. CONVENIENCE D.R.'S IN COUNTER	C16A			2"	F.F.D.			S.U.	EXTEND DRAIN LINES FROM DRIP TROUGH IN COUNTER, FROM DRAIN VALVE ON HOT FOOD WARMER - ITEM #C19 AND FROM ICE/SODA DISPENSER - ITEM #C38								
					C16B	120	1	10.0 + 10.0	J.B.	4"	CONNECT TO J.B. IN BASE FOR 2 P.W. CONVENIENCE D.R.'S IN COUNTER																	
C17	1	COMBINATION OVEN/STEAMER	A	SINGLE COMPARTMENT, (5) 13" X 18" OR (5) 12" x 20" x 2 1/2" DEEP PANS	C17A	208	3	26.0	J.B.	30"	CONNECT TO COMBINATION OVEN/STEAMER	C17A			2"	12"X12" F.S.			S.U.	EXTEND DRAIN LINE FROM COMBINATION OVEN/STEAMER								
												C17B		3/4"					30"	CONNECT THROUGH WALL MOUNTED WATER FILTER TO COMBINATION OVEN/STEAMER. 40-50 P.S.I. REQUIRED. WATER FILTER FURNISHED W/ EQUIPMENT & MOUNTED TO WALL AT 48" A.F.F. BACKFLOW PREVENTER REQUIRED								
C18	-	NOT USED	-																									

US Army Corps of Engineers
Norfolk District

MARK	DATE	DESCRIPTION	BY	APP

DESIGNED: JK | CHECKED: JK | DATE: 12/11/09
DRAWN: JK, TJT | SUBMITTED: JK | SCALE: NONE
PROJECT NO. | NORFOLK DISTRICT FILE NO. —
SPECIFICATION NO. —
DRAWING NO. QF609
Last Revised: 12-11-09 | Plot Scale: 1:1
File name: QF609.DWG

NORFOLK DISTRICT
CORPS OF ENGINEERS
NORFOLK, VIRGINIA

NAO
CENTER OF STANDARDIZATION

US ARMY STANDARD DESIGN
1300 SOLDIER PERMANENT PARTY
DINING FACILITY

FOOD SERVICE EQUIPMENT SCHEDULE

SHEET REFERENCE NUMBER
QF609
SHEET OF

					ELECTRICAL SCHEDULE							PLUMBING SCHEDULE									VENTILATION SCHEDULE							
ITEM NUMBER	QTY.	DESCRIPTION	EQUIP. CLASS	COMMENTS	ELEC. SYMBOL	VOLTS	PHASE	AMPS	CONN.	HT. A.F.F.	REMARKS	PLUMBING SYMBOL	H.W.	C.W.	WASTE SIZE	WASTE TYPE	GAS	GAS MBTU	HT. A.F.F.	REMARKS	VENTILATION SYMBOL	QTY.	EXHAUST COLLAR	EXHAUST CFM	SUPPLY COLLAR	SUPPLY CFM	STATIC PRESSURE	HT. A.F.F.
C19	1	HOT FOOD WARMER (4 WELLS)	A		C19A	208	1	16.3	S.R.	4"	NEMA #L6-30P PLUG FURNISHED ON FOOD WARMER	–			3/4"	INDIRECT			25"	EXTEND DRAIN LINE TO #C16A								
												C19A	1/2"						S.U.	CONNECT TO FILLER FAUCET								
C20	2	COUNTER PROTECTORS	A		C20A	120	1	3.0	J.B.	4"	CONNECT TO FLUORESCENT LIGHTS IN COUNTER PROTECTOR																	
					C20B	120	1	3.0	J.B.	18"	CONNECT TO FLUORESCENT LIGHTS IN COUNTER PROTECTOR																	
C21	1	DISPLAY FREEZER	A	TWO SECTION, REACH-IN	C21A	120/208	1	12.5	S.R.	86"	NEMA #L14-20P PLUG FURNISHED ON DISPLAY FREEZER																	
C22	1	DISPLAY REFRIGERATOR	A	TWO SECTION, REACH-IN	C22A	120	1	10.4	D.R.	86"																		
C23	4	CUP/LID DISPENSERS	A																									
C24	2	COFFEE BREWERS	L		C24A	120/208	1	30.0	J.B.	48"	CONNECT TO COFFEE BREWER. VERIFY ELECTRICAL REQUIREMENTS W/ VENDOR FURNISHED EQUIPMENT	C24A		1/2"					48"	CONNECT TO COFFEE BREWER								
					C24B						NOT USED	C24B								NOT USED								
C25	2	CONDIMENT RACKS	C																									
C26	1	BASKET COUNTER	A		C26A	120	1	10.0	D.R.	48"	CONVENIENCE RECEPTACLE																	
C27	–	NOT USED	–		C27A						NOT USED																	
C28	1	WRAPPING COUNTER	A		C28A	120	1	10.0	D.R.	48"	CONVENIENCE RECEPTACLE																	
C29	1	BEVERAGE/CASHIER COUNTER	A		C29A	120	1	10.0	D.R.	48"	CONVENIENCE RECEPTACLE																	
C30	1	REFRIGERATOR, REACH-IN	A	TWO SECTION, REACH-IN	C30A	120	1	10.4	D.R.	86"																		
C31	1	FREEZER, REACH-IN	A	TWO SECTION, REACH-IN	C31A	120	1	14.9	D.R.	86"	NEMA #5-20P PLUG FURNISHED ON FREEZER																	
C32	1	WORK TABLE	C		C32A	120	1	10.0	D.R.	48"	CONVENIENCE RECEPTACLE																	
C33	2	REFRIGERATORS, REACH-IN	A	ONE SECTION, REACH-IN	C33A	120	1	8.0	D.R.	86"																		
C34	1	TRASH BIN	C																									
C35	1	ANGLE RACK	C																									
C36	1	UTILITY CART	C																									
C37	1	FREEZER, REACH-IN	A	ONE SECTION, REACH-IN	C37A	120	1	11.5	D.R.	86"																		
C38	1	ICE/SODA DISPENSER	L	MANUAL LOAD ICE DISPENSER W/ SODA VALVES	C38A	120	1	15.0	F.R.	4"	ICE/SODA DISPENSER & CARBONATOR IN BASE OF COUNTER. VERIFY ELECTRICAL REQUIREMENTS W/ VENDOR FURNISHED EQUIPMENT	C38A		3/4"					S.U.	CONNECT TO CARBONATOR IN BASE OF COUNTER, TEA BREWER – ITEM #C40 & TO JUICE DISPENSER – ITEM #C41. BACKFLOW PREVENTER REQUIRED.								
C39	1	BEVERAGE COUNTER	A		C39A	120	1	10.0	D.R.	48"	CONVENIENCE RECEPTACLE	C39A			2"	F.F.D.			S.U.	EXTEND DRAIN LINE FROM DRIP TROUGH IN COUNTER								
C40	2	TEA BREWERS	L		C40A	120	1	15.0	D.R.	48"	VERIFY ELECTRICAL REQUIREMENTS W/ VENDOR FURNISHED EQUIPMENT	–		1/2"					34"	CONNECT C.W. FROM #C38A OR C43B.								
					C40B	120	1	15.0	D.R.	4"	VERIFY ELECTRICAL REQUIREMENTS W/ VENDOR FURNISHED EQUIPMENT																	
C41	2	JUICE DISPENSERS, CONCENTRATE	L		C41A	120	1	15.0	D.R.	48"	VERIFY ELECTRICAL REQUIREMENTS W/ VENDOR FURNISHED EQUIPMENT	–		1/2"					34"	CONNECT C.W. FROM #C38A OR C43B.								
					C41B	120	1	15.0	D.R.	4"	VERIFY ELECTRICAL REQUIREMENTS W/ VENDOR FURNISHED EQUIPMENT																	
C42	1	SYRUP BOX SHELVING UNIT	L									C42A			2"	F.D.			S.U.									
C43	1	ICE/SODA DISPENSER	L		C43A	120	1	15.0	F.R.	18"	TRANSFORMER FOR SODA DISPENSING HEADS & CARBONATOR IN BASE OF COUNTER. VERIFY ELECTRICAL REQUIREMENTS W/ VENDOR FURNISHED EQUIPMENT	C43A			2"	F.F.D.			S.U.	EXTEND DRAIN LINE FROM ICE/SODA DISPENSER								
												C43B		3/4"					18"	CONNECT TO CARBONATOR IN BASE OF COUNTER, TEA BREWER – ITEM #C40 & TO JUICE DISPENSER – ITEM #C41. BACKFLOW PREVENTER REQUIRED.								

US Army Corps of Engineers
Norfolk District

MARK	DATE	DESCRIPTION	BY	APP

DATE: 12/11/09
SCALE: NONE
NORFOLK DISTRICT FILE NO. —
SPECIFICATION NO. —
Plot scale: 1:1
CHECKED: JK
SUBMITTED: JK
DESIGNED: JK
DRAWN: JK,TJT
PROJECT NO.
DRAWING NO. QF610
Last revised: 12-11-09
File name: QF610.DWG

NORFOLK DISTRICT
CORPS OF ENGINEERS
NORFOLK, VIRGINIA

NAO
CENTER OF STANDARDIZATION

US ARMY STANDARD DESIGN
1300 SOLDIER PERMANENT PARTY
DINING FACILITY

FOOD SERVICE EQUIPMENT SCHEDULE

SHEET REFERENCE NUMBER
QF610
SHEET OF