GRAPHIC SCALES

1/16" = 1'-0" 0 5' 10' 20' 30' 60'

GENERAL NOTES

1. FLOOR PLAN INDICATES THE PREFERRED SOLUTION IN SCHEMATIC FORM ONLY. PROPOSER IS ALLOWED TO MAKE ADJUSTMENTS FOR EXTERIOR FACADE/ARCHITECTURAL THEME AND/OR TO ACCOMODATE SPECIFIC BUILDING ENGINEERING SYSTEMS (STRUCTURAL, MECHANICAL, FIRE PROTECTION ETC.). THESE ADJUSTMENTS, AS WELL AS ANY FUNCTIONAL DEVIATIONS PROPOSED, WILL BE EVALUATED BY THE CENTER OF STANDARDIZATION FOR THIS FACILITY DURING THE SOURCE SELECTION EVALUATION BOARD.

2. AREAS SHOWN ON THE NET AREA COMPUTATION ARE TO BE CONSIDERED NET PROGRAM REQUIREMENTS. THE MAXIMUM GROSS SQUARE FOOTAGE ALLOWABLE FOR THIS CONTRACT IS IDENTIFIED IN SECTION 01 10 00 PARAGRAPH 2 OF THE RFP. A REDUCED OVERALL GROSS AREA IS ACCEPTALE IF ALL NET PROGRAM REQUIREMENTS AND ADJACENCIES ARE MET.

NOTES

1. DINING AREA 'A', 65 TABLES = 260 SEATS
2. DINING AREA 'B', 68 TABLES = 272 SEATS
3. FLAT PANEL TV MENU BOARD.
4. DOCK LEVELER.
5. FREEZER AND REFRIGERATION UNITS (MAY BE PLACED ON ROOF OR, AS AN ALTERNATIVE, IN UNOBSTRUCTED SPACE ONLY WHEN APPROVED BY THE INSTALLATION). THE LOCATION OF THE UNITS MAY VARY. SITE ADAPT AE TO COORDINATE LOCATION PER ATFP, CIVIL, AND FOOD SERVICE REQUIREMENTS.
6. SITE ADAPT AE TO PROVIDE FIRE PUMP ROOM IF REQUIRED BY SITE CONDITIONS.
7. WALL MOUNTED FLAT PANEL TV
8. CEILING MOUNTED FLAT PANEL TV

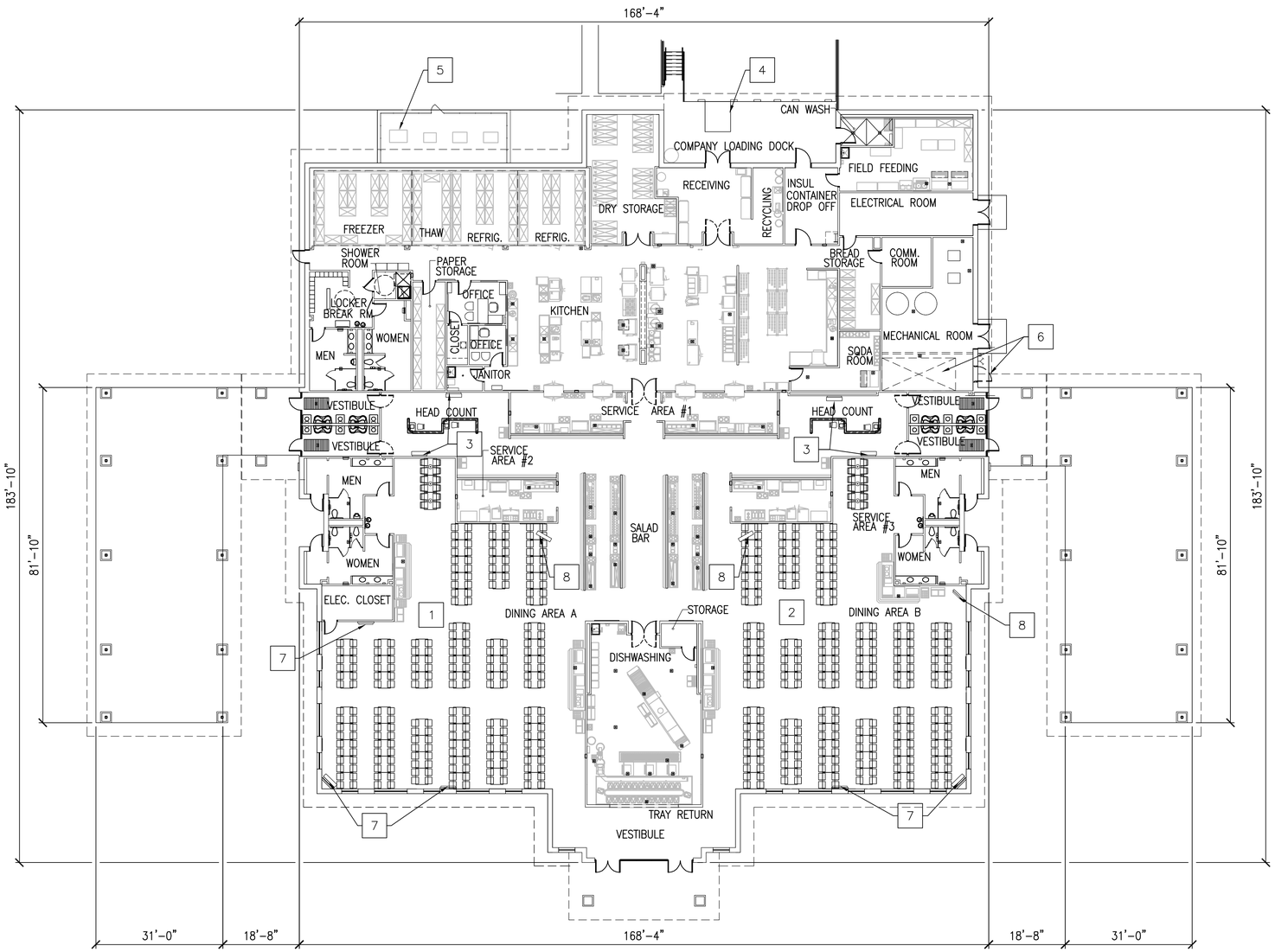

PLAN NORTH

OVERALL 1ST FLOOR PLAN

1/16"=1'-0"

NET AREA COMPUTATIONS

SPACE	801–1300 PERSON FT²
KITCHEN	4,876
DINING	8,263
SERVING	4,520
DISHWASHING	1,135
RECEIVING VESTIBULE	247
PUBLIC TOILETS	896
STAFF TOILETS/ LOCKERS	648
JANITOR	48
VESTIBULE (3)	594
CORRIDORS	605
OFFICES	272
REF./FREEZER	1,264
FIELD FEEDING/DROP OFF	726
DRY STORAGE	654
PAPER STORAGE	209
BREAD STORAGE	205
REMOTE SODA	140
CAN/CART WASH	84
MECHANICAL	946
ELECTRICAL	138
COMM	74
TOTAL NET AREA	26,544

GROSS AREA COMPUTATIONS

SPACE	801–1300 PERSON FT²
BUILDING	27,458
LOADING DOCK	273
CANOPIES	2,536
TOTAL SF	30,267

NOTE:

SQUARE FOOTAGE CALCULATED IAW UFC 3-100-10 PARA 2-15.3

US Army Corps of Engineers
Norfolk District

MARK	DATE	DESCRIPTION	BY	APP

DESIGNED: JH
DRAWN: SS
PROJECT NO. –
DRAWING NO. AE101
Last saved: 12-11-09
File name: AE101.DWG

CHECKED: RTB
SUBMITTED: JH
NORFOLK DISTRICT FILE NO. –
SPECIFICATION NO. –
Plot scale: 1:1

DATE: 12/11/09
SCALE: AS NOTED

NORFOLK DISTRICT
CORPS OF ENGINEERS
NORFOLK, VIRGINIA

NAO CENTER OF STANDARDIZATION

US ARMY STANDARD DESIGN
1300 TRAINEE DINING FACILITY

OVERALL FLOOR PLAN

SHEET REFERENCE NUMBER
AE101

SHEET OF

H:\PJ\3285\CAD-Stripdown-DFAC\CAD-1300 1 storey\CAD\Sheets\A\AE101.dwg Fri, 18 Dec 2009 - 3:07pm ssurendhranath

WALK-IN NOTES

1. SEE DETAIL #B1/QF501 FOR INSULATED FLOOR DETAIL.
2. CENTER LINE OF BREAKER STRIP IN FLOOR.
3. WALK–IN INSTALLER TO RUN DRAIN LINE EXPOSED IN FREEZER AND REFRIGERATORS, BEHIND SHELVING, AND EXTEND DOWN INTO FUNNEL OF FLOOR DRAIN. PROVIDE "P" TRAP OUTSIDE WALK–IN COMPARTMENT.
4. WALK–IN INSTALLER TO PROVIDE SLEEVES FOR DRAIN LINE IN WALLS OF WALK–IN AND IN BUILDING WALL AT CORRECT HEIGHT FOR PROPER DRAINAGE. CAULK ALL SLEEVES.
5. ALL ELECTRICAL CONNECTIONS FOR WALK–INS INCLUDING WIRING TO ALL EVAPORATORS, VAPOR–PROOF LIGHTS, DOOR HEATERS, THRESHOLD HEATERS, TIME CLOCKS, HEATED PRESSURE RELIEF PORT, WIRING FROM FREEZER EVAPORATOR TO ROOM THERMOSTAT, AND ALL CONTROLS TO BE PROVIDED.
6. FREEZER EVAPORATOR SHALL BE ELECTRICALLY CONNECTED TO ITS RESPECTIVE CONDENSING UNIT AS REQUIRED. PROVIDE WIRING FROM THE TIME CLOCK ON THE FREEZER CONDENSING UNIT TO THE ELECTRIC DEFROST HEATERS IN THE EVAPORATOR. ELECTRICAL INTERCONNECTIONS BETWEEN THE REFRIGERATOR EVAPORATORS AND THEIR RESPECTIVE CONDENSING UNITS ARE NOT REQUIRED.
7. REMOTE AIR COOLED REFRIGERATOR AND FREEZER CONDENSING UNITS (ITEM # 6 AND #7) SHALL BE MOUNTED ON METAL RACKS AND FACTORY WIRED. UNITS SHALL BE LOCATED OUTDOORS ON A CONCRETE PAD AS SHOWN ON PLAN. LOCATION OF CONDENSING UNITS MAY VARY DEPENDING ON SITE–ADAPT CONSIDERATIONS.

   ITEM #6
   FREEZER CONDENSING UNIT SHALL BE WIRED 208–60–3 PHASE WITH AN APPROX. TOTAL LOAD OF 32.9 AMPS., INCLUDING EVAPORATOR. A SEPARATE 208–60–1 PHASE LINE SHALL BE RUN FROM THE CONTROL PANEL ON THE CONDENSING UNIT TO THE EVAPORATORS IN THE WALK–IN TO HANDLE AN 11.7 AMP. LOAD FOR THE ELECTRIC DEFROST HEATERS IN EACH EVAPORATOR. CONDENSING UNIT MEASURES APPROX. 37" X 52" X 39" HIGH AND WEIGHS APPROX. 825 LBS.

   ITEM #7
   THAW REFRIGERATOR CONDENSING UNIT SHALL BE WIRED 208–60–3 PHASE WITH AN APPROX. TOTAL LOAD OF 5.8 AMPS., NOT INCLUDING EVAPORATOR. CONDENSING UNIT MEASURES APPROX. 28" X 38" X 17" HIGH AND WEIGHS APPROX. 260 LBS.

   TWO OTHER REFRIGERATOR CONDENSING UNITS SHALL EACH BE WIRED 208–60–3 PHASE WITH AN APPROX. TOTAL LOAD OF 9.4 AMPS. EACH, NOT INCLUDING EVAPORATOR. EACH CONDENSING UNIT MEASURES APPROX. 30" X 43" X 30" HIGH AND WEIGHS APPROX. 315 LBS.
8. OVERALL HEIGHT OF WALK–IN SHALL BE APPROX. 9'–5" A.F.F.
9. WALK–IN INSTALLER SHALL PROVIDE METAL TRIM STRIPS TO MATCH WALK–IN FACING WHERE WALK–IN ABUTS BUILDING WALLS, AND CLOSURE PANELS FROM TOP OF WALK–IN TO FINISHED CEILING.
10. FINISHED FLOOR TO BE LEVEL PLUS OR MINUS 1/8".
11. ALL ELECTRIC CONDUIT SHALL BE RUN ON TOP (EXTERIOR) OF WALK–IN AND SHALL HAVE VAPOR SEALS ON INTERIOR AND EXTERIOR OF CONDUIT.

SODA SYSYEM NOTES

1. FOUR 6" DIA. PVC CONDUITS STUBBED UP OUT OF FLOOR 4" A.F.F. SYRUP AND CO2 LINES AND BAG–N–BOX JUICE LINES EXTENDED DOWN INTO CONDUIT BY VENDOR(S).
2. PROVIDE FOUR 6" DIA. PVC CONDUITS BELOW FLOOR FOR SYRUP AND CO2 LINES AND BAG–N–BOX JUICE LINES . ALL TURNS TO BE SMOOTH SWEEPS WITH 30" MIN. RADIUS. SYRUP AND CO2 LINES AND BAG–N–BOX JUICE LINES EXTENDED THROUGH CONDUITS BY VENDOR(S). CONDUITS FURNISHED AND INSTALLED UNDER PLUMB. SEC.
3. 6" DIA. PVC CONDUIT STUBBED UP OUT OF FLOOR 4" A.F.F. SYRUP AND CO2 LINES AND BAG–N–BOX JUICE LINES EXTENDED UP OUT OF CONDUIT AND CONNECTED TO DISPENSING EQUIPMENT BY VENDOR(S).
4. 2" DIA. PVC CONDUIT STUBBED UP OUT OF FLOOR 4" A.F.F. FOR CO2 LINE(S) FROM BULK CO2 TANK. CO2 LINE(S) EXTENDED DOWN INTO CONDUIT BY VENDOR.
5. PROVIDE 2" DIA. PVC CONDUIT BELOW FLOOR FOR CO2 LINE(S) FROM BULK CO2 TANK. ALL TURNS TO BE SMOOTH SWEEPS WITH 24" MIN. RADIUS. CO2 LINE(S) EXTENDED THROUGH CONDUIT BY VENDOR.
6. 2" DIA. PVC CONDUIT STUBBED UP OUT OF FLOOR 4" A.F.F. CO2 LINE(S) FROM BULK CO2 TANK TO BE EXTENDED UP OUT OF CONDUIT AND CONNECTED TO DISPENSING EQUIPMENT BY VENDOR(S).

ICE MAKING MACHINE REMOTE CONDENSER NOTES

1. THREE REMOTE CONDENSERS FOR ICE MAKING MACHINES – ITEM #92 SHALL BE INSTALLED ON BUILDING ROOF AS CLOSE AS POSSIBLE ABOVE ICE MAKING MACHINE LOCATIONS. EACH CONDENSER MEASURES APPROX. 28" X 30" X 38" HIGH AND WEIGHS APPROX. 110 LBS.
2. EACH CONDENSER SHALL BE ELECTRICALLY CONNECTED TO ITS RESPECTIVE ICE MACHINE. SEPARATE ELECTRICAL ROUGH–INS FOR THE CONDENSERS ARE NOT REQUIRED.
3. REFRIGERATION LINES FOR EACH CONDENSER FURNISHED AND INSTALLED WITH ICE MAKING MACHINES.

GENERAL NOTES

1. ALL WORK SHALL BE DONE IN ACCORDANCE WITH APPLICABLE CODES.
2. ALL DIMENSIONS ARE FROM THE FINISHED SURFACE OF WALLS, FLOORS OR CEILINGS.
3. ALL DIMENSIONS INDICATED FOR ROUGH–INS SHALL BE TO THE CENTER OF THE ROUGH–IN.
4. UTILITY REQUIREMENTS SHOWN ON DRAWINGS ARE FOR THE FOOD SERVICE EQUIPMENT ONLY.
5. IN–WALL BACKING SHALL BE PROVIDED FOR ALL WALL MOUNTED FOOD SERVICE EQUIPMENT AS REQUIRED. COORDINATE FOR TYPES, SIZES AND LOCATIONS OF BACKING.

ELECTRICAL NOTES

1. ELECTRICAL ROUGH–INS AND FINAL CONNECTIONS TO EQUIPMENT SHALL BE UNDER ELECT. SEC. MATERIALS FOR EQUIPMENT CONNECTIONS SHALL BE FURNISHED AND INSTALLED UNDER ELECT. SEC. EXCEPT AS NOTED ON DRAWINGS.
2. ELECTRICAL DISCONNECTS ARE NOT FURNISHED WITH EQUIPMENT. THEY SHALL BE FURNISHED AND INSTALLED WHERE REQUIRED UNDER ELECT. SEC. COORDINATE WITH EQUIPMENT ON PROPER LOCATIONS.
3. ALL CONDUIT SHALL BE CONCEALED IN WALLS, FLOOR OR CEILING EXCEPT ONLY WHERE ABSOLUTELY NECESSARY.
4. ALL CONDUIT AND ELECTRICAL CORDS SHALL BE LOCATED UP OFF THE FLOOR TO FACILITATE FLOOR CLEANING AND SHALL BE SUPPORTED FROM ABOVE. FLOOR MOUNTED SUPPORTS SHALL NOT BE USED.
5. RECEPTACLES OF THE PROPER CONFIGURATION TO ACCOMMODATE THE PLUGS FURNISHED ON THE EQUIPMENT SHALL BE FURNISHED AND INSTALLED UNDER ELECT. SEC.

PLUMBING NOTES

1. PLUMBING ROUGH–INS UNDER PLUMB. SEC. INCLUDING FLOOR DRAINS, FLOOR SINKS, AND GREASE INTERCEPTORS.
2. FINAL CONNECTIONS TO EQUIPMENT UNDER PLUMB. SEC.. COORDINATE WITH THE EQUIPMENT INSTALLER ON CONNECTIONS TO EQUIPMENT.
3. MATERIALS FOR EQUIPMENT CONNECTIONS INCLUDING PIPING, FITTINGS, STOPS, TRAPS, BACKFLOW PREVENTION DEVICES AND PRESSURE REGULATORS FURNISHED AND INSTALLED UNDER PLUMB. SEC. EXCEPT AS NOTED ON DRAWINGS.
4. ALL PIPING SHALL BE CONCEALED IN WALLS, FLOOR OR CEILING EXCEPT ONLY WHERE ABSOLUTELY NECESSARY.
5. ALL PIPING SHALL BE LOCATED UP OFF THE FLOOR TO FACILITATE FLOOR CLEANING AND SHALL BE SUPPORTED FROM ABOVE. FLOOR MOUNTED SUPPORTS SHALL NOT BE USED.
6. WATER FILTERS OR SOFTENERS NOT FURNISHED WITH EQUIPMENT EXCEPT AS NOTED ON DRAWINGS.
7. GAS PRESSURE REGULATORS SHALL BE FURNISHED WITH THE EQUIPMENT AND INSTALLED UNDER PLUMB. SEC..
8. SINKS: FAUCETS AND DRAIN FITTINGS FURNISHED WITH THE EQUIPMENT AND INSTALLED UNDER PLUMB. SEC.
9. DISPOSERS: SOLENOID VALVE, ATMOSPHERIC VACUUM BREAKER, AND WATER INLET FURNISHED WITH THE EQUIPMENT AND INSTALLED UNDER PLUMB. SEC.
10. BOOSTER HEATERS: PRESSURE REDUCING VALVE, TEMPERATURE/ PRESSURE RELIEF VALVE, TWO TEMPERATURE/PRESSURE GAUGES AND SHOCK ABSORBER FURNISHED WITH THE EQUIPMENT AND INSTALLED UNDER PLUMB. SEC.
11. 180 DEGREE WATER LINE FROM BOOSTER HEATER TO DISHWASHER SHALL BE INSULATED UNDER PLUMB. SEC.

VENTILATION NOTES

1. EXHAUST HOOD FURNISHED AND INSTALLED BY EQUIPMENT INSTALLER. DUCTWORK AND ROOF TOP EQUIPMENT FURNISHED AND INSTALLED UNDER MECH. SEC.
2. CONTROLS OR SWITCHES FOR EXHAUST FANS OR MAKE–UP AIR UNITS SHALL BE FURNISHED WITH THE HVAC EQUIPMENT. CONTROLS OR SWITCHES SHALL BE RECESSED IN THE BUILDING WALL, NOT ON THE EXHAUST HOOD.
3. FIRE SUPPRESSION SYSTEM FURNISHED AND INSTALLED WITH THE EXHAUST HOOD. CONNECTIONS TO FIRE SUPPRESSION SYSTEM FURNISHED AND INSTALLED UNDER ELECT. SEC.

EQUIPMENT CLASSES

A – CONTRACTOR FURNISHED, CONTRACTOR INSTALLED FROM CONSTRUCTION FUNDS.

C – GOVERNMENT FURNISHED, GOVERNMENT INSTALLED. FUNDS OTHER THAN CONSTRUCTION.

L – FURNISHED BY VENDOR

LEGEND

- EQUIPMENT ITEM
- PLUMBING REQUIREMENT
- ELECTRICAL REQUIREMENT
- VENTILATION REQUIREMENT
- WALK–IN NOTE
- SODA SYSTEM NOTE

A.	AMPERES
A.F.F.	ABOVE FINISHED FLOOR
C.W.	COLD WATER
D.R.	DUPLEX RECEPTACLE
E.C.	EQUIPMENT CONNECTION
F.D.	FLOOR DRAIN
F.F.D.	FLOOR DRAIN WITH FUNNEL
F.R.	FOUR–PLEX RECEPTACLE
F.S.	FLOOR SINK
H.P.	HORSE POWER
H.W.	HOT WATER
J.B.	JUNCTION BOX
K.W.	KILOWATT
P.W.	PRE–WIRED
S.O.	STUB OUT
S.R.	SPECIAL RECEPTACLE
S.U.	STUB UP

US Army Corps of Engineers
Norfolk District

MARKS	DATE	DESCRIPTION	BY	APP

DESIGNED: JK | CHECKED: JK | DATE: 12/11/09
DRAWN: JK,TJT | SUBMITTED: JK | SCALE: NONE
PROJECT NO. – | NORFOLK DISTRICT FILE NO. – | SPECIFICATION NO.
DRAWING NO. QF001 | Last saved on 12-11-09 | File name: QF001.DWG | Plot scale: 1:1

NORFOLK DISTRICT
CORPS OF ENGINEERS
NORFOLK, VIRGINIA

NAO
CENTER OF STANDARDIZATION

US ARMY STANDARD DESIGN
1300 TRAINEE DINING FACILITY

GENERAL NOTES AND LEGEND

SHEET REFERENCE NUMBER
QF001
SHEET OF

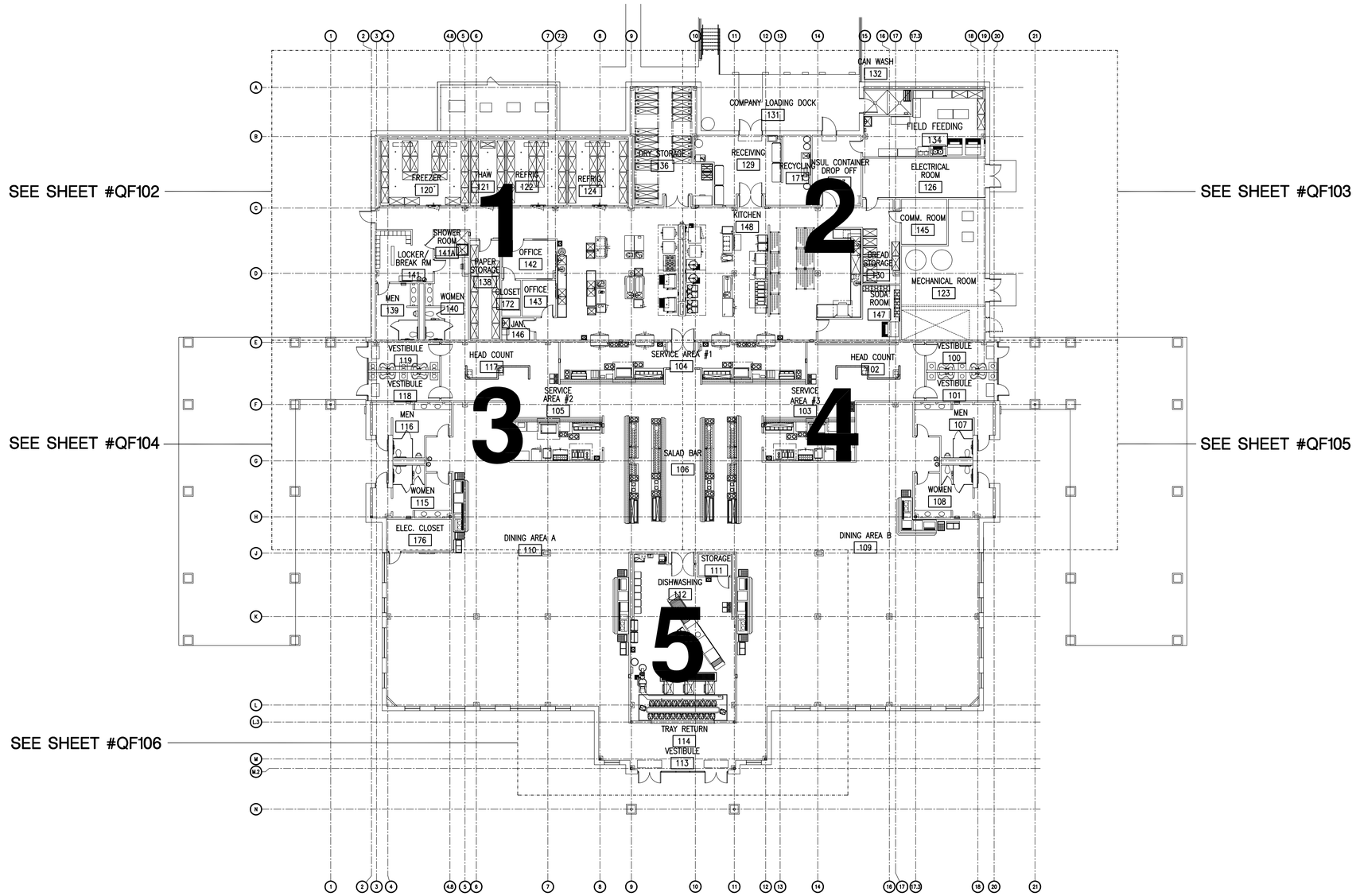

OVERALL FOOD SERVICE PLAN

SCALE : 1/16"=1'-0"

US Army Corps of Engineers
Norfolk District

MARK	DATE	DESCRIPTION	BY	APP

DESIGNED: JK
CHECKED: JK
DRAWN: JK,TJT
SUBMITTED: JK
PROJECT NO. –
NORFOLK DISTRICT FILE NO. –
SPECIFICATION NO. –
DRAWING NO. QF101
DATE: 12/11/09
SCALE: AS NOTED
Plot scale: 1:1
Last saved: Nov 12, 11:11:09
File name: QF101.DWG

NORFOLK DISTRICT
CORPS OF ENGINEERS
NORFOLK, VIRGINIA

NAO
CENTER OF STANDARDIZATION

US ARMY STANDARD DESIGN
1300 TRAINEE DINING FACILITY

OVERALL FOOD SERVICE PLAN

SHEET REFERENCE NUMBER
QF101
SHEET OF

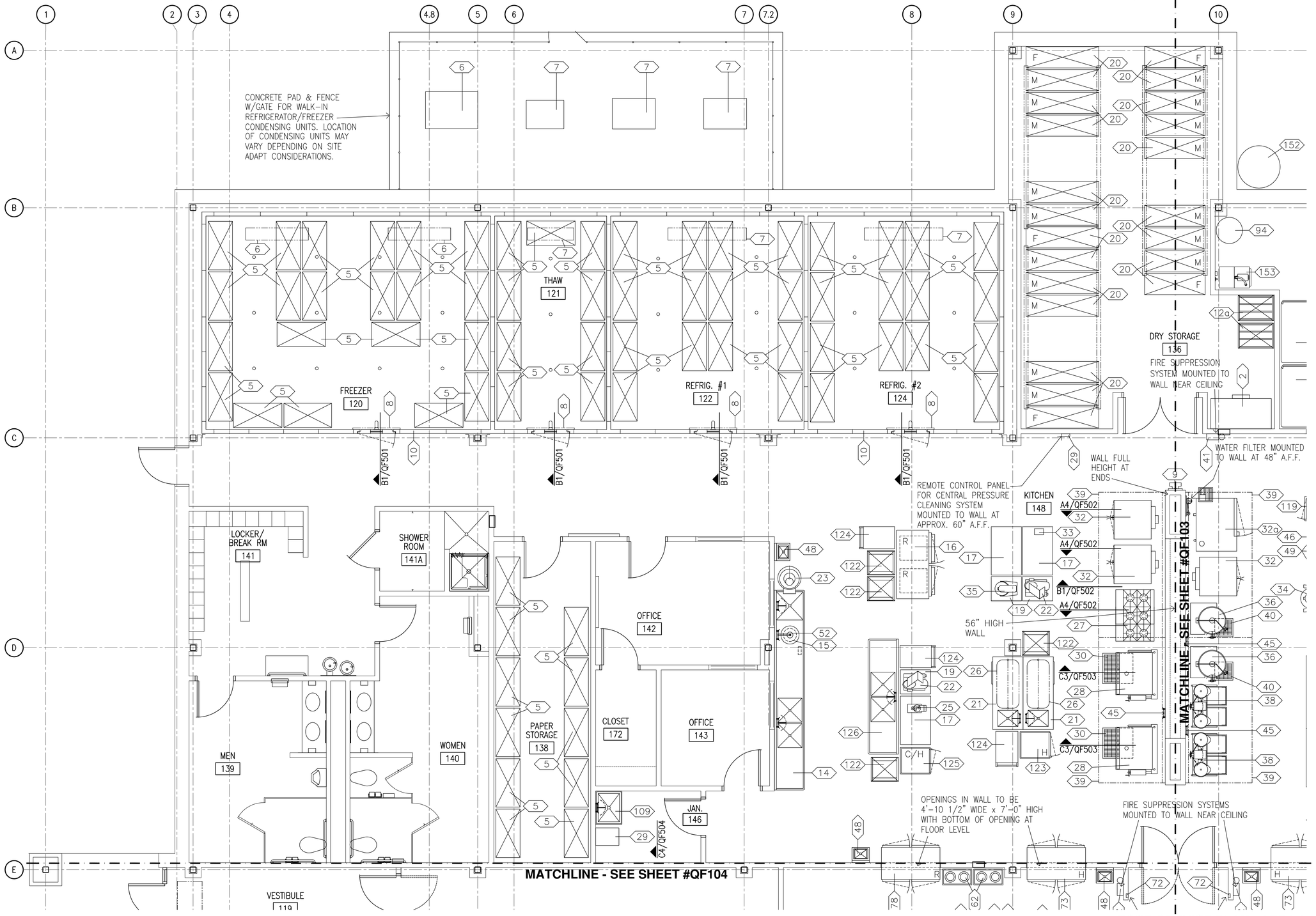

FOOD SERVICE PLAN - AREA 1

SCALE : 1/4"=1'-0"

US Army Corps of Engineers
Norfolk District

MARK	DATE	DESCRIPTION	BY	APP

DESIGNED: JK
DRAWN: JK, TJT
CHECKED: JK
SUBMITTED: JK
DATE: 12/11/09
SCALE: AS NOTED
NORFOLK DISTRICT FILE NO. –
SPECIFICATION NO. –
DRAWING NO. QF102
Last saved: 12/11/2009
File name: QF102.DWG
Plot scale: 1:1

NORFOLK DISTRICT
CORPS OF ENGINEERS
NORFOLK, VIRGINIA

NAO
CENTER OF STANDARDIZATION

US ARMY STANDARD DESIGN
1300 TRAINEE DINING FACILITY

FOOD SERVICE PLAN - AREA 1

SHEET REFERENCE NUMBER
QF102
SHEET OF

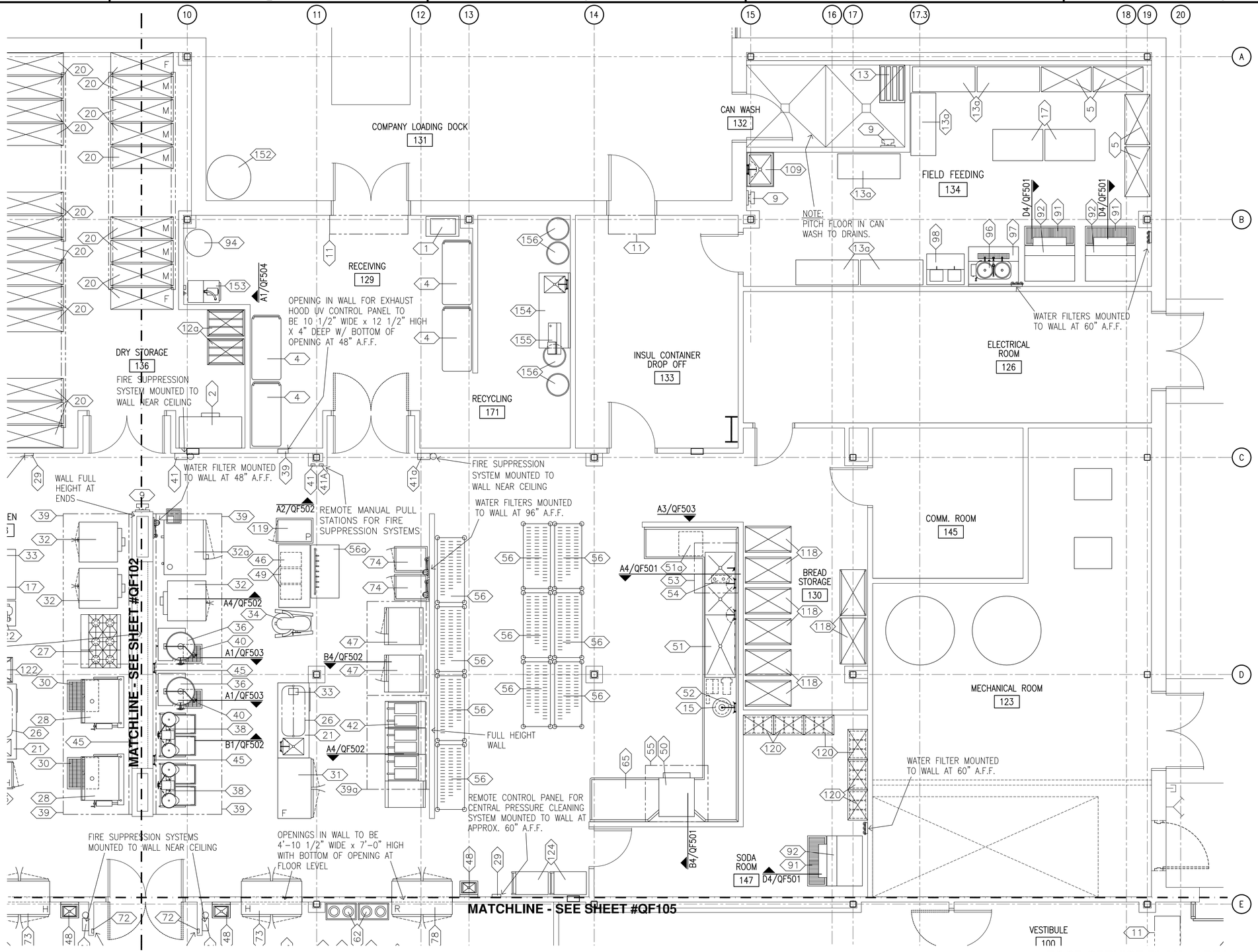

FOOD SERVICE PLAN - AREA 2

SCALE : 1/4"=1'-0"

US Army Corps of Engineers
Norfolk District

MARK	DATE	DESCRIPTION	BY	APP

DATE: 12/11/09
SCALE: AS NOTED
SUBMITTED: JK
NORFOLK DISTRICT FILE NO. —
SPECIFICATION NO. —
CHECKED: JK
DESIGNED: JK
DRAWN: JK, TJT
PROJECT NO. —
DRAWING NO. QF103
Last saved: 12-11-09
File name: QF103.DWG
Plot scale: 1:1

NORFOLK DISTRICT
CORPS OF ENGINEERS
NORFOLK, VIRGINIA

NAO
CENTER OF STANDARDIZATION

US ARMY STANDARD DESIGN
1300 TRAINEE DINING FACILITY

FOOD SERVICE PLAN - AREA 2

SHEET REFERENCE NUMBER
QF103
SHEET OF

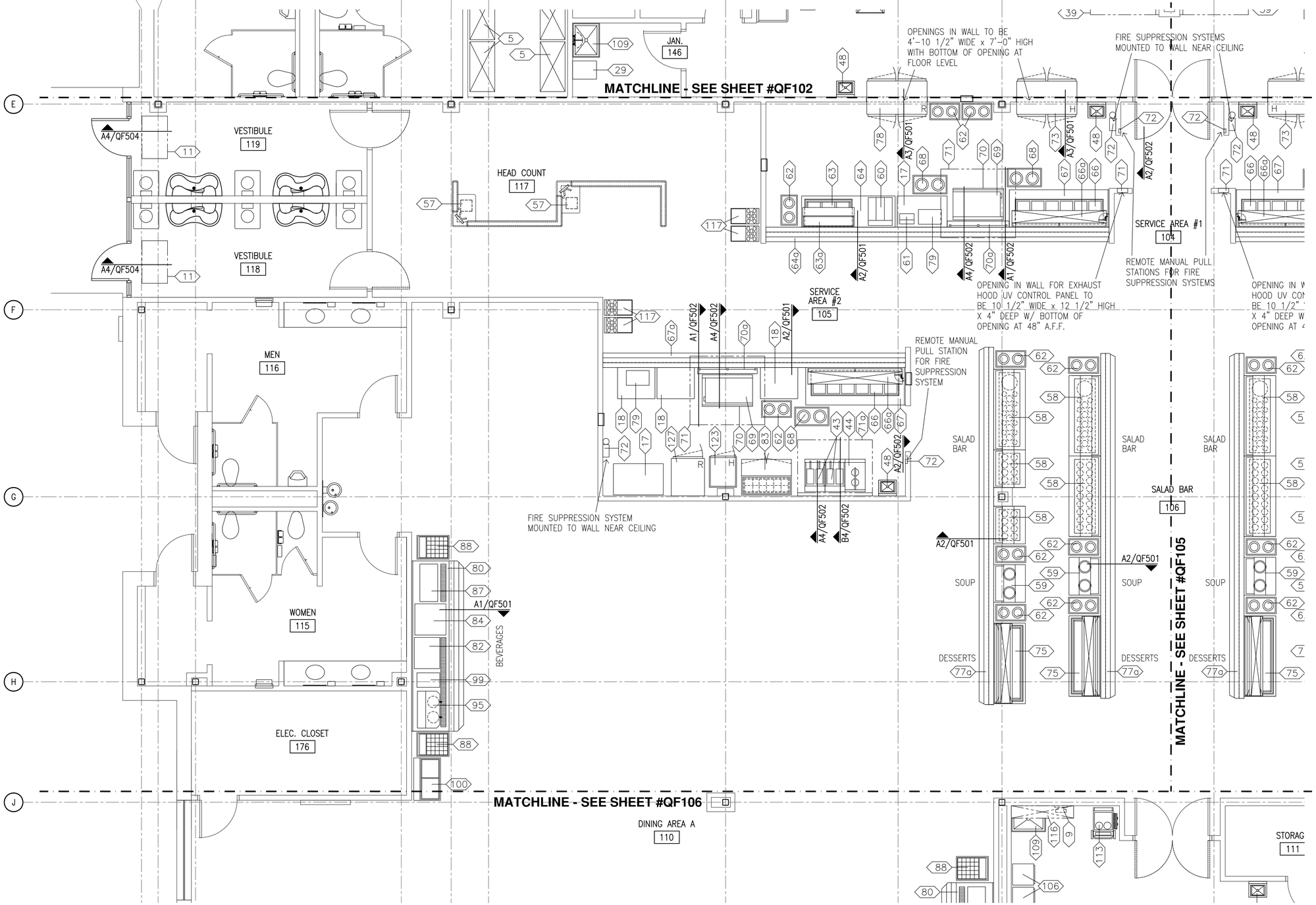

FOOD SERVICE PLAN - AREA 3

SCALE : 1/4"=1'-0"

US Army Corps of Engineers
Norfolk District

MARK	DESCRIPTION	DATE	APPR.
			BY

DESIGNED: JK
DRAWN: JK, TJT
PROJECT NO. –
CHECKED: JK
SUBMITTED: JK
DATE: 12/11/09
SCALE: AS NOTED
NORFOLK DISTRICT FILE NO. –
SPECIFICATION NO. –
DRAWING NO. QF104
Last saved: 12-11-09
Plot scale: 1:1
File name: QF104.DWG

NORFOLK DISTRICT
CORPS OF ENGINEERS
NORFOLK, VIRGINIA

NAO
CENTER OF STANDARDIZATION

US ARMY STANDARD DESIGN
1300 TRAINEE DINING FACILITY

FOOD SERVICE PLAN - AREA 3

SHEET REFERENCE NUMBER
QF104
SHEET OF

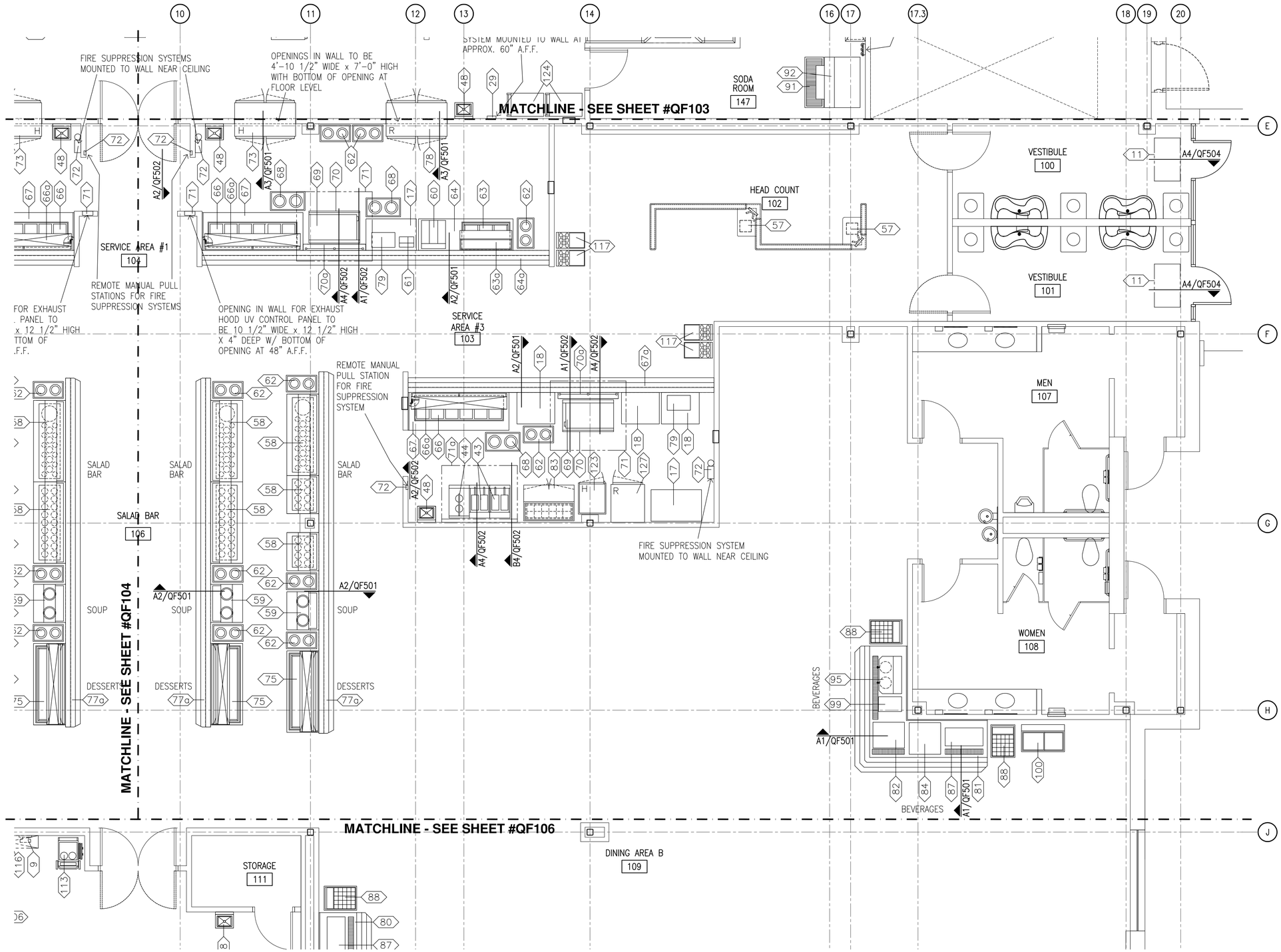

FOOD SERVICE PLAN - AREA 4

SCALE : 1/4"=1'-0"

US Army Corps of Engineers
Norfolk District

MARK	DATE	DESCRIPTION	BY	APP

DESIGNED: JK
DRAWN: JK, TJT
PROJECT NO. –
CHECKED: JK
SUBMITTED: JK
DATE: 12/11/09
SCALE: AS NOTED
NORFOLK DISTRICT FILE NO. –
SPECIFICATION NO. –
DRAWING NO. QF105
Last Modified: 12-11-09
File name: QF105.DWG
Plot scale: 1:1

NORFOLK DISTRICT
CORPS OF ENGINEERS
NORFOLK, VIRGINIA

NAO
CENTER OF STANDARDIZATION

US ARMY STANDARD DESIGN
1300 TRAINEE DINING FACILITY

FOOD SERVICE PLAN - AREA 4

SHEET REFERENCE NUMBER
QF105
SHEET OF

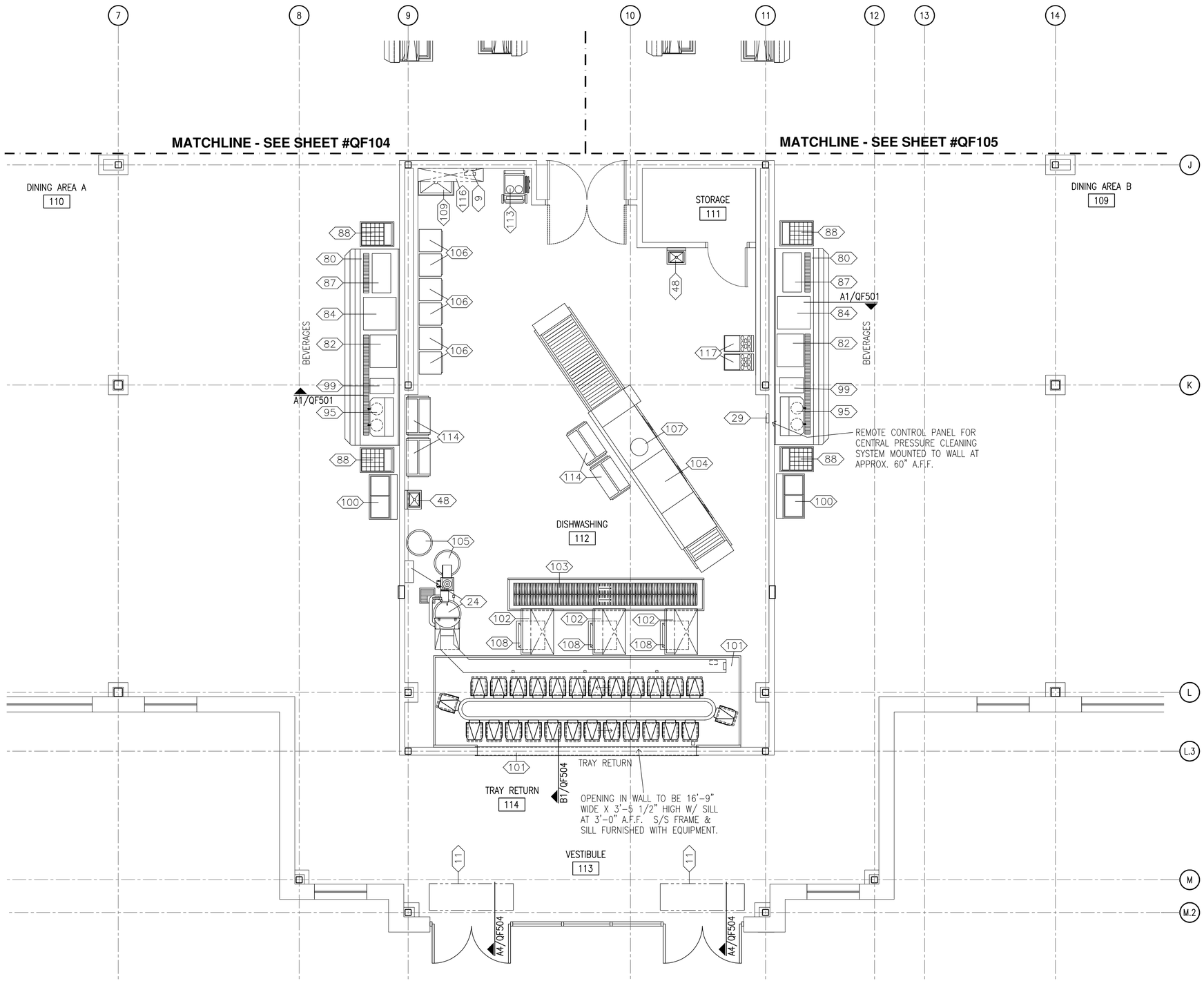

FOOD SERVICE PLAN - AREA 5

SCALE : 1/4"=1'-0"

US Army Corps of Engineers
Norfolk District

MARK	DATE	DESCRIPTION	BY	APP

DESIGNED: JK
DRAWN: JK,TJT
PROJECT NO. –
CHECKED: JK
SUBMITTED: JK
DATE: 12/11/09
SCALE: AS NOTED
NORFOLK DISTRICT FILE NO. –
SPECIFICATION NO. –
DRAWING NO. QF106
Last saved: 12-12-09
File name: QF106.DWG
Plot scale: 1:1

NORFOLK DISTRICT
CORPS OF ENGINEERS
NORFOLK, VIRGINIA

NAO
CENTER OF STANDARDIZATION

US ARMY STANDARD DESIGN
1300 TRAINEE DINING FACILITY

FOOD SERVICE PLAN - AREA 5

SHEET REFERENCE NUMBER
QF106
SHEET OF

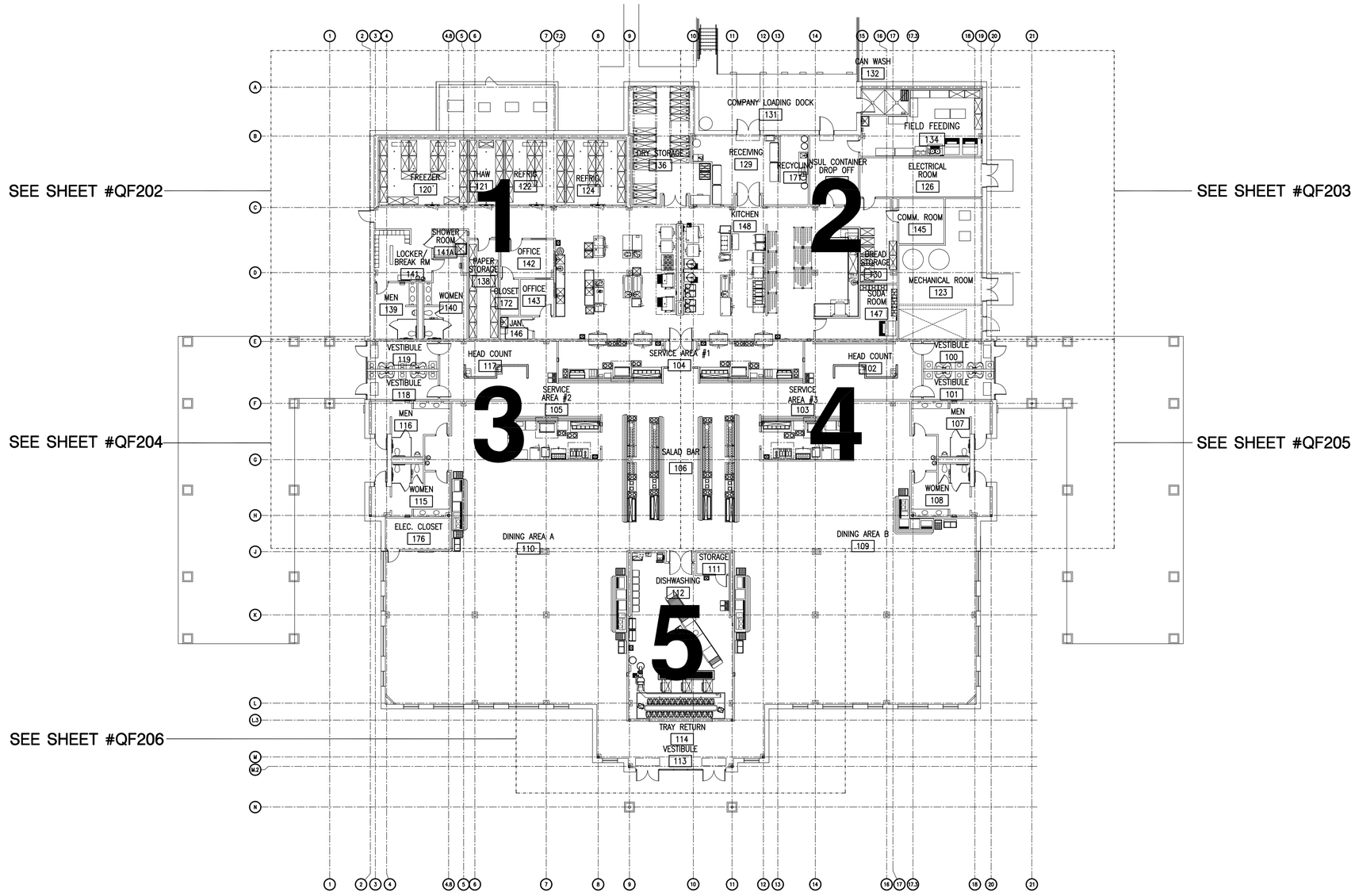

OVERALL UTILITY REQUIREMENT PLAN

SCALE : 1/16"=1'-0"

US Army Corps of Engineers
Norfolk District

MARK	DATE	DESCRIPTION	BY	APP

DESIGNED: JK
DRAWN: JK,TJT
PROJECT NO. –
CHECKED: JK
SUBMITTED: JK
DATE: 12/11/09
SCALE: AS NOTED
NORFOLK DISTRICT FILE NO. –
SPECIFICATION NO. –
DRAWING NO. QF201
Last workset saved on: 12-11-09
File name: QF201.DWG
Plot scale: 1:1

NORFOLK DISTRICT
CORPS OF ENGINEERS
NORFOLK, VIRGINIA

NAO
CENTER OF STANDARDIZATION

US ARMY STANDARD DESIGN
1300 TRAINEE DINING FACILITY

OVERALL UTILITY REQUIREMENT PLAN

SHEET REFERENCE NUMBER
QF201
SHEET OF

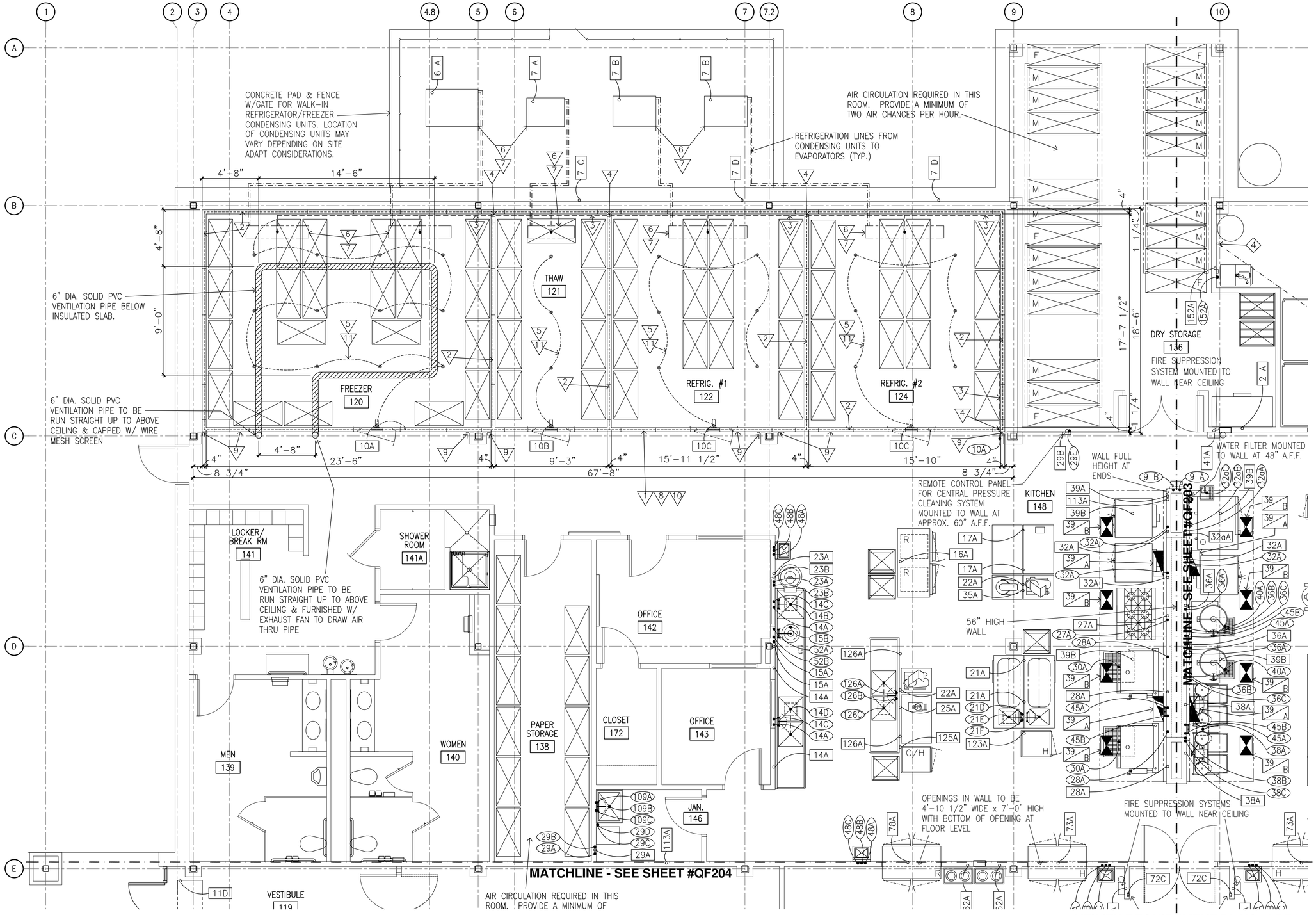

UTILITY REQUIREMENT PLAN - AREA 1

SCALE : 1/4"=1'-0"

US Army Corps of Engineers
Norfolk District

MARK	DATE	DESCRIPTION	BY	APP

DATE: 12/11/09
SCALE: AS NOTED
CHECKED: JK
SUBMITTED: JK
NORFOLK DISTRICT FILE NO. —
SPECIFICATION NO. —
DESIGNED: JK
DRAWN: JK, TJT
PROJECT NO. —
DRAWING NO. QF202
Last saved: 2009-12-4-09
File name: QF202.DWG
Plot scale: 1:1

NORFOLK DISTRICT
CORPS OF ENGINEERS
NORFOLK, VIRGINIA

NAO
CENTER OF STANDARDIZATION

US ARMY STANDARD DESIGN
1300 TRAINEE DINING FACILITY

UTILITY REQUIREMENT PLAN - AREA 1

SHEET REFERENCE NUMBER
QF202
SHEET OF

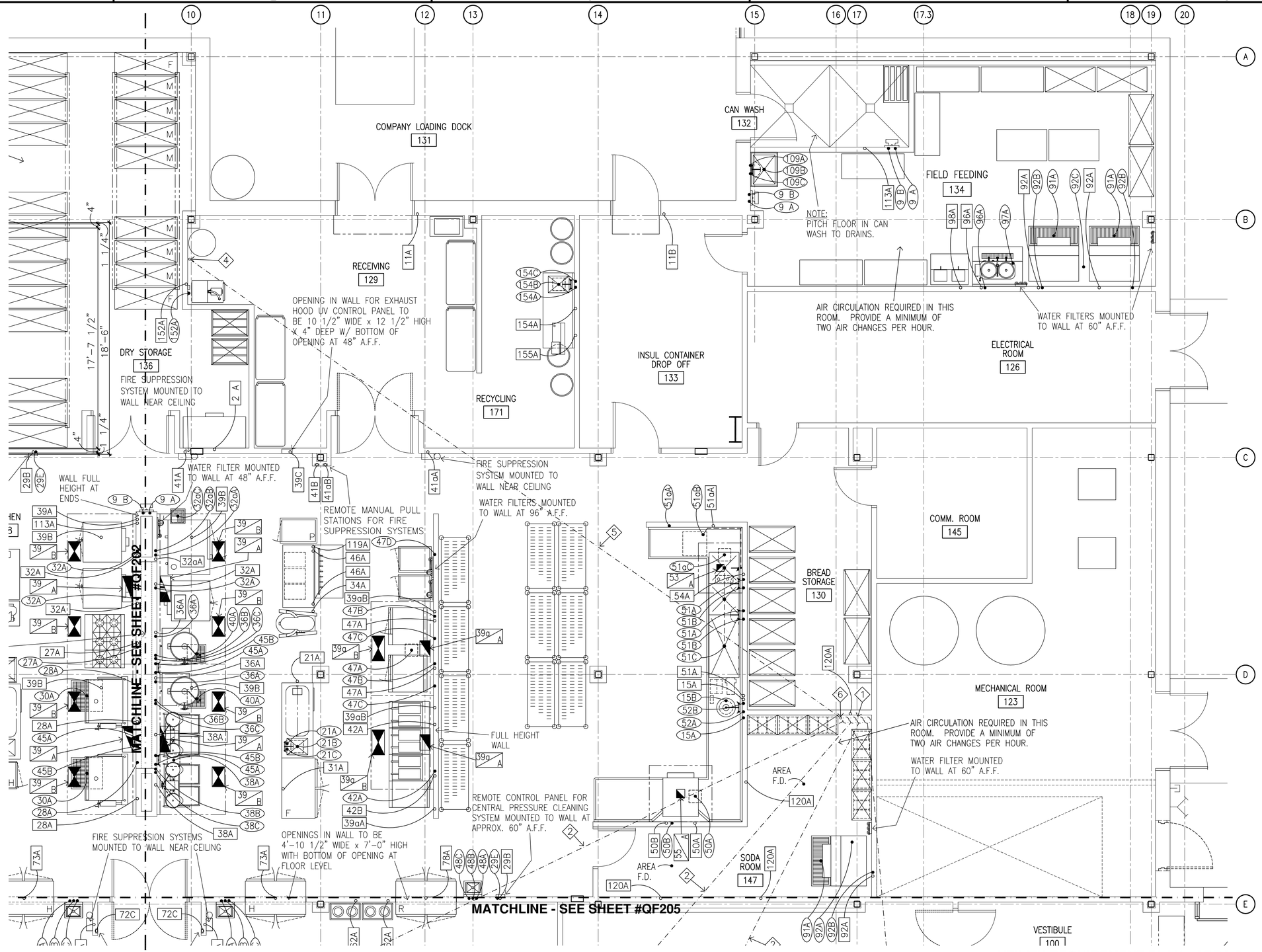

UTILITY REQUIREMENT PLAN - AREA 2

SCALE : 1/4"=1'-0"

US Army Corps of Engineers
Norfolk District

MARK	DATE	DESCRIPTION	BY	APP

DATE: 12/11/09
SCALE: AS NOTED
CHECKED: JK
SUBMITTED: JK
NORFOLK DISTRICT FILE NO. —
SPECIFICATION NO. —
Plot scale: 1:1

DESIGNED: JK
DRAWN: JK, TJT
PROJECT NO. —
DRAWING NO. QF203
Last revised: 12-12-09
File name: QF203.DWG

NORFOLK DISTRICT
CORPS OF ENGINEERS
NORFOLK, VIRGINIA

NAO
CENTER OF STANDARDIZATION

US ARMY STANDARD DESIGN
1300 TRAINEE DINING FACILITY

UTILITY REQUIREMENT PLAN - AREA 2

SHEET REFERENCE NUMBER
QF203
SHEET OF

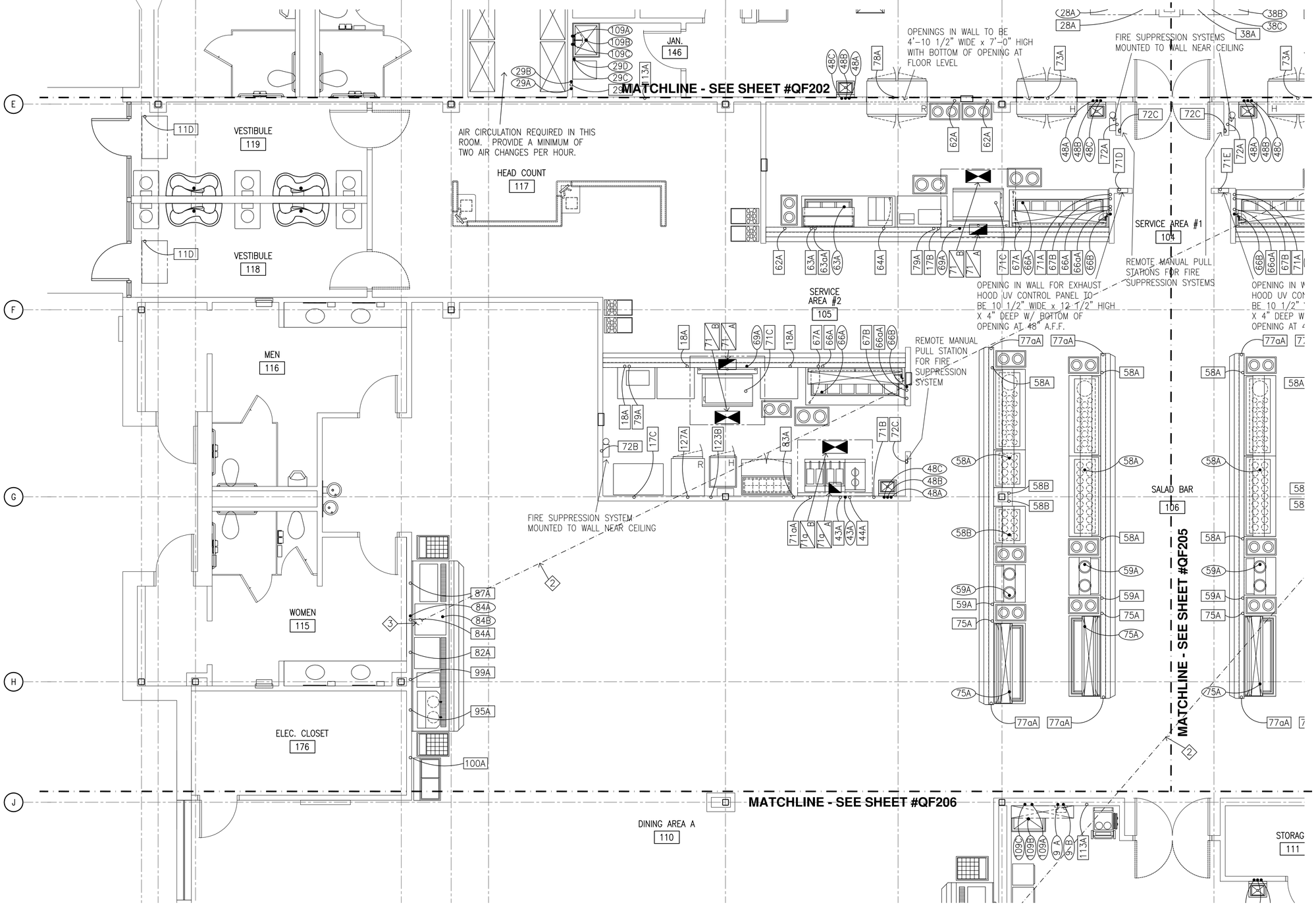

UTILITY REQUIREMENT PLAN - AREA 3

SCALE : 1/4"=1'-0"

US Army Corps of Engineers
Norfolk District

MARK	DATE	DESCRIPTION	BY	APP

DESIGNED: JK
DRAWN: JK, TJT
PROJECT NO. –
CHECKED: JK
SUBMITTED: JK
DATE: 12/11/09
SCALE: AS NOTED
NORFOLK DISTRICT FILE NO. –
SPECIFICATION NO. –
DRAWING NO. QF204
Last revised: Oct-11-09
File name: QF204.DWG
Plot scale: 1:1

NORFOLK DISTRICT
CORPS OF ENGINEERS
NORFOLK, VIRGINIA

NAO
CENTER OF STANDARDIZATION

US ARMY STANDARD DESIGN
1300 TRAINEE DINING FACILITY

UTILITY REQUIREMENT PLAN - AREA 3

SHEET REFERENCE NUMBER
QF204
SHEET OF

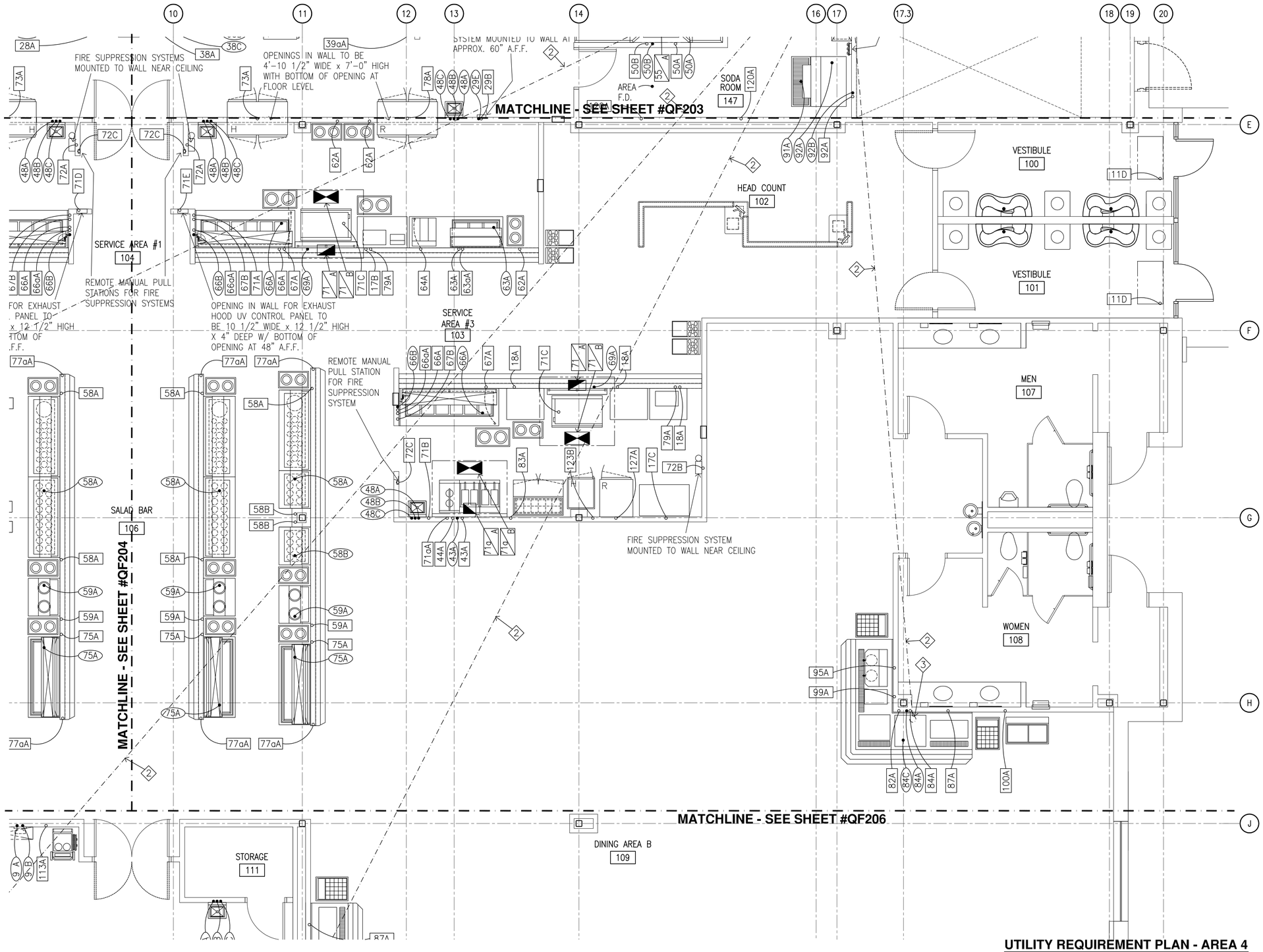

UTILITY REQUIREMENT PLAN - AREA 4

SCALE : 1/4"=1'-0"

US Army Corps of Engineers
Norfolk District

MARK	DATE	DESCRIPTION	BY	APP

DESIGNED: JK
CHECKED: JK
DATE: 12/11/09
DRAWN: JK, TJT
SUBMITTED: JK
SCALE: AS NOTED
PROJECT NO. —
NORFOLK DISTRICT FILE NO. —
SPECIFICATION NO. —
DRAWING NO. QF205
Last saved: 12-11-09
File name: QF205.DWG
Plot scale: 1:1

NORFOLK DISTRICT
CORPS OF ENGINEERS
NORFOLK, VIRGINIA

NAO
CENTER OF STANDARDIZATION

US ARMY STANDARD DESIGN
1300 TRAINEE DINING FACILITY

UTILITY REQUIREMENT PLAN - AREA 4

SHEET REFERENCE NUMBER
QF205
SHEET OF

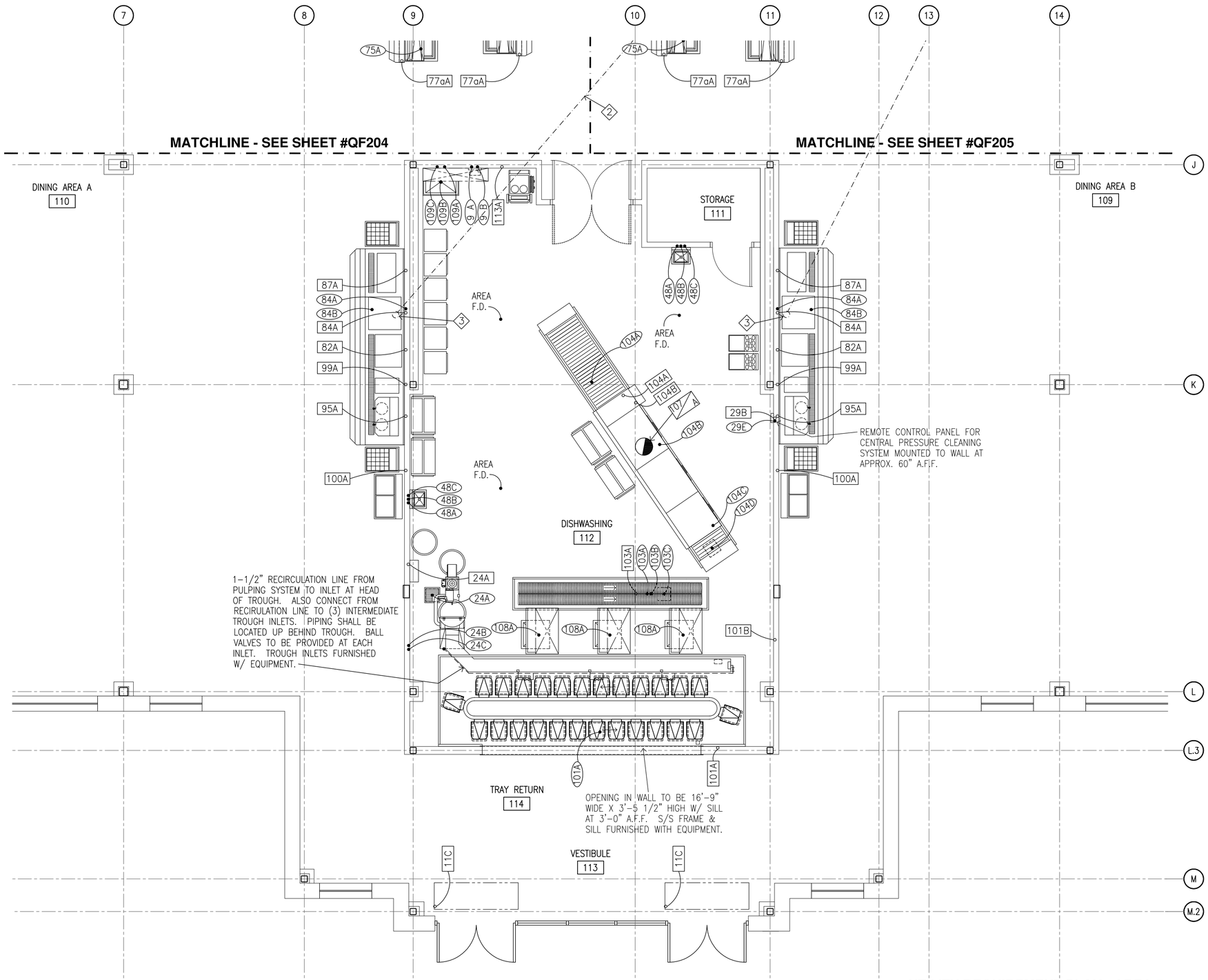

UTILITY REQUIREMENT PLAN - AREA 5

SCALE : 1/4"=1'-0"

US Army Corps of Engineers
Norfolk District

MARK	DATE	DESCRIPTION	BY	APP

DESIGNED: JK
DRAWN: JK,TJT
PROJECT NO. –
CHECKED: JK
SUBMITTED: JK
DATE: 12/11/09
SCALE: AS NOTED
NORFOLK DISTRICT FILE NO. –
SPECIFICATION NO. –
DRAWING NO. QF206
Last Modified: Dec 11, 2009
File name: QF206.DWG
Plot scale: 1:1

NORFOLK DISTRICT
CORPS OF ENGINEERS
NORFOLK, VIRGINIA

NAO
CENTER OF STANDARDIZATION

US ARMY STANDARD DESIGN
1300 TRAINEE DINING FACILITY

UTILITY REQUIREMENT PLAN - AREA 5

SHEET REFERENCE NUMBER
QF206
SHEET OF

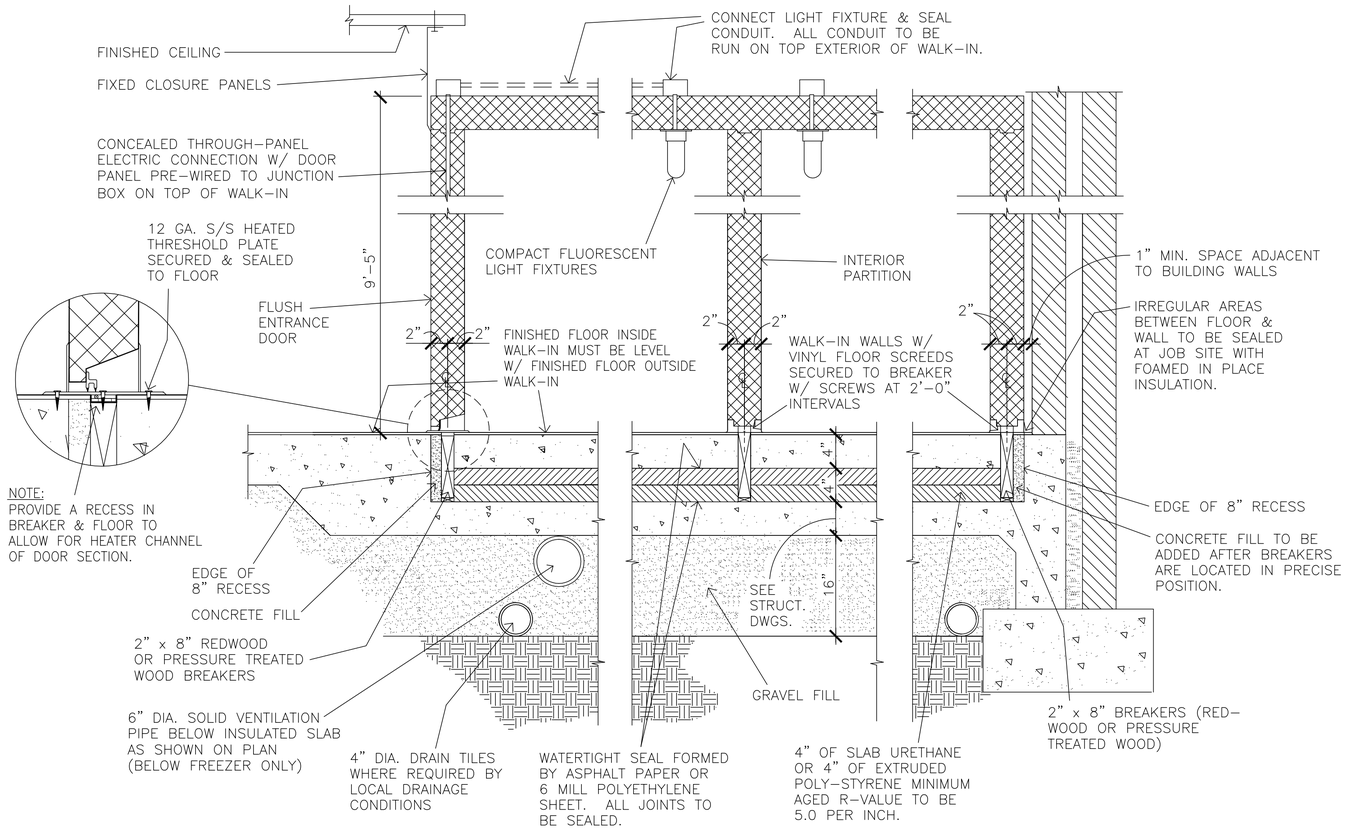

B1 / QF501 WALK-IN SECTION
SCALE: NONE

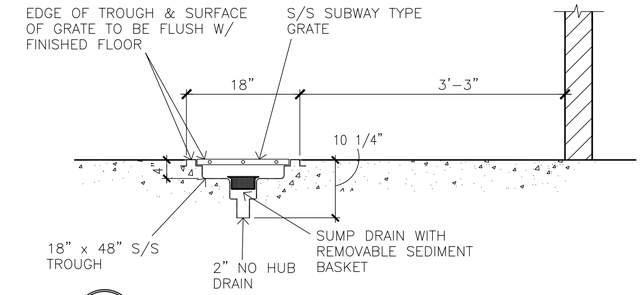

D4 / QF501 DRAIN TROUGH AT ICE MACHINE
SCALE: NONE

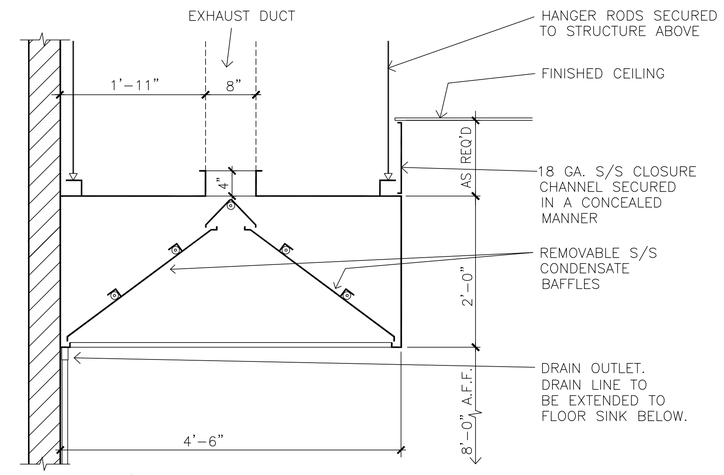

B4 / QF501 CONDENSATE HOOD SECTION
SCALE: NONE

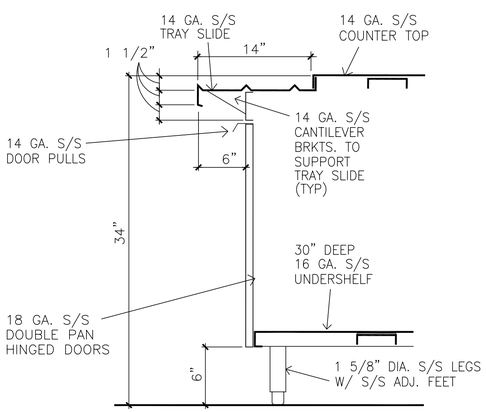

A1 / QF501 TYPICAL COUNTER SECTION
SCALE: NONE

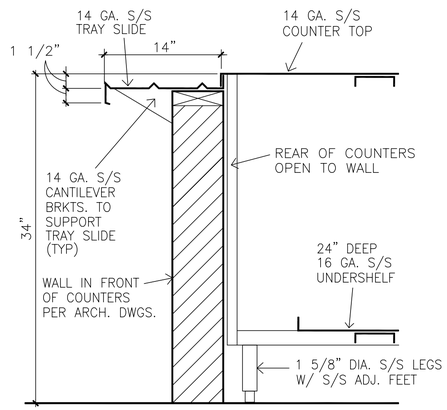

A2 / QF501 TYPICAL COUNTER SECTION
SCALE: NONE

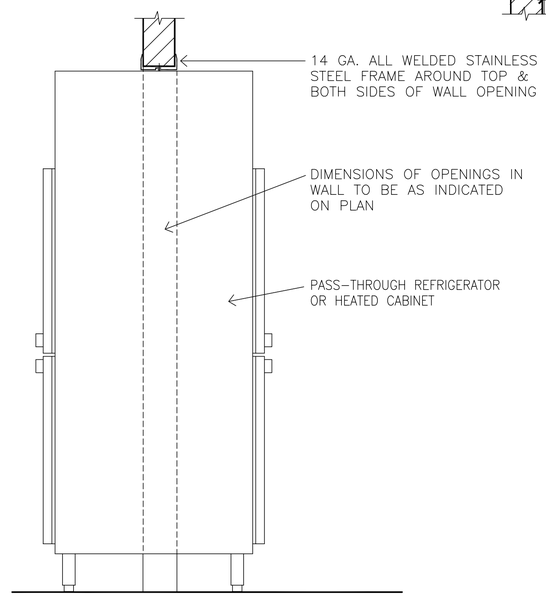

A3 / QF501 PASS THROUGH CABINET SECTION
SCALE: NONE

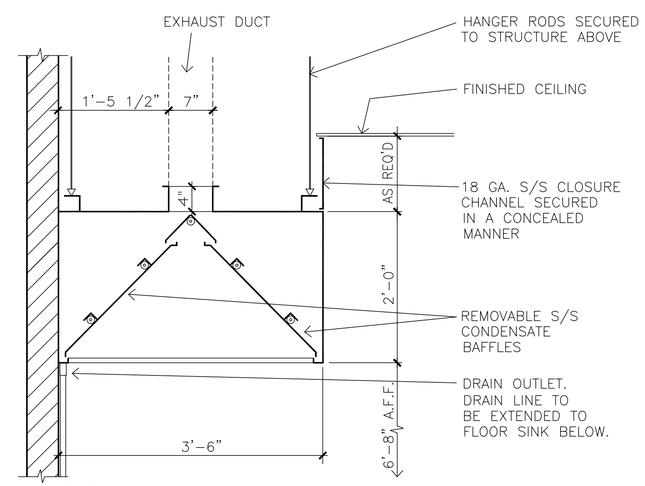

A4 / QF501 CONDENSATE HOOD SECTION
SCALE: NONE

US Army Corps of Engineers
Norfolk District

MARK	DATE	DESCRIPTION	BY	APP

DESIGNED: JK | CHECKED: JK | DATE: 12/11/09
DRAWN: JK, TJT | SUBMITTED: JK | SCALE: AS NOTED
PROJECT NO. – | NORFOLK DISTRICT FILE NO. –
DRAWING NO. QF501 | SPECIFICATION NO. –
Last saved: 12-11-09 | Plot scale: 1:1
File name: QF501.DWG

NORFOLK DISTRICT
CORPS OF ENGINEERS
NORFOLK, VIRGINIA

NAO
CENTER OF STANDARDIZATION

US ARMY STANDARD DESIGN
1300 TRAINEE DINING FACILITY

FOOD SERVICE DETAILS

SHEET REFERENCE NUMBER
QF501
SHEET OF

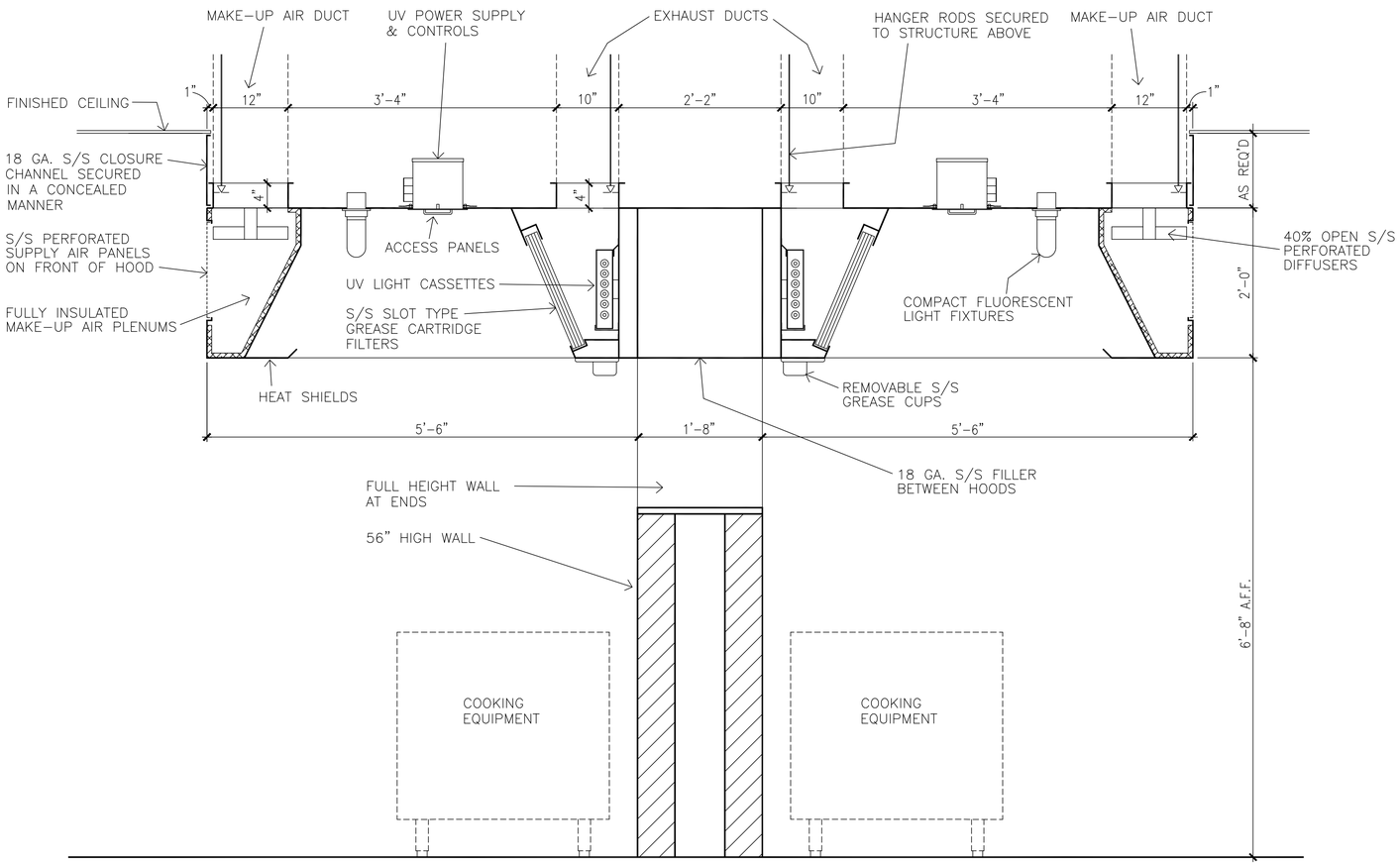

B1 / QF502 EXHAUST HOOD SECTION
SCALE: NONE (ITEM #39)

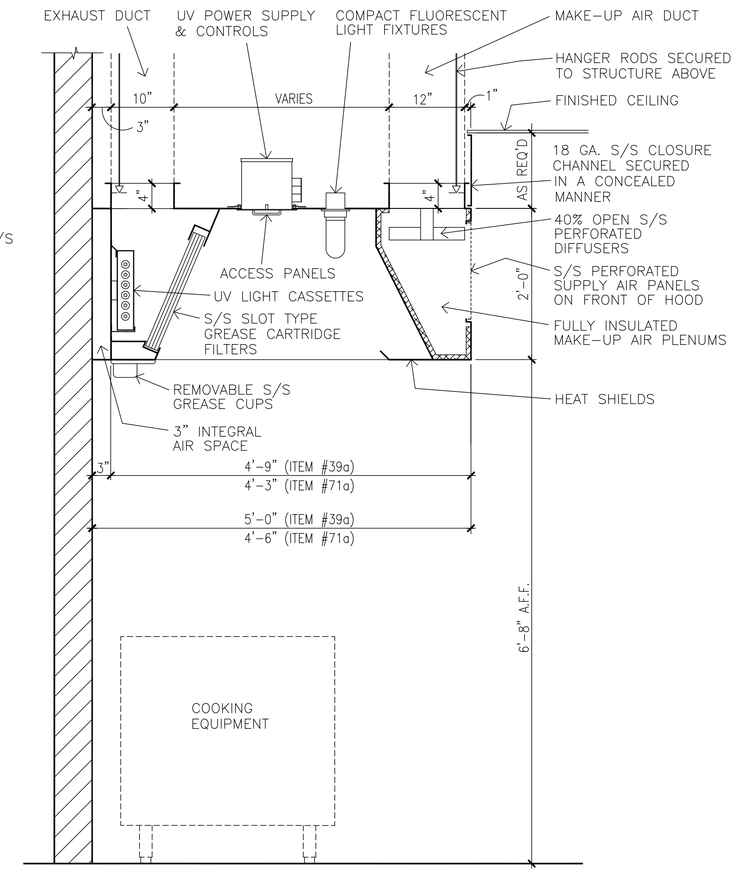

B4 / QF502 EXHAUST HOOD SECTION
SCALE: NONE (ITEMS #39a & #71a)

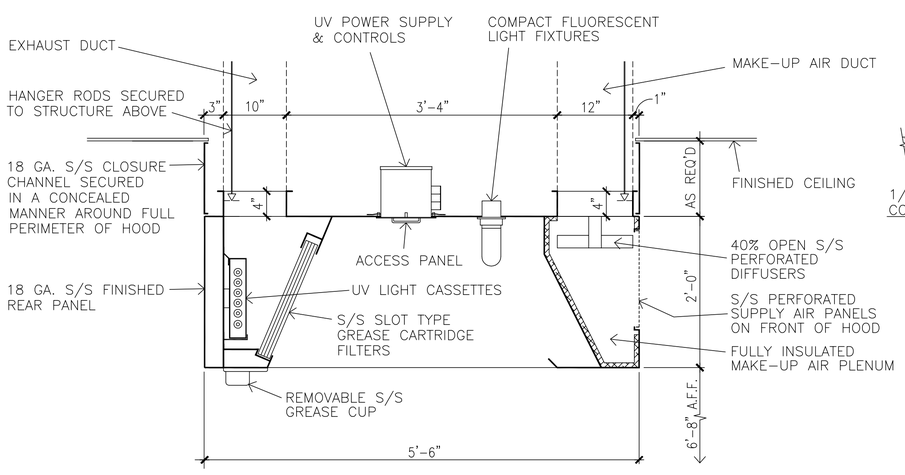

A1 / QF502 EXHAUST HOOD SECTION
SCALE: NONE (ITEM #71)

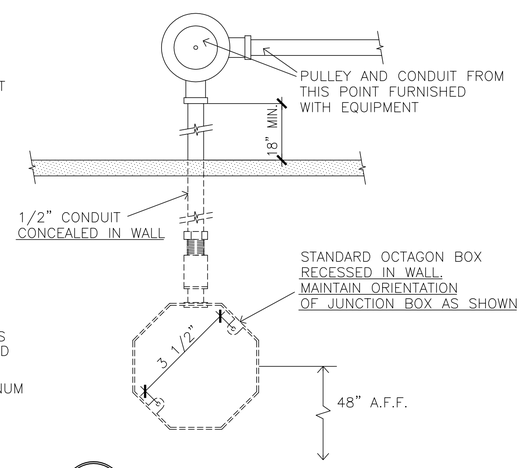

A2 / QF502 REMOTE PULL STATION
SCALE: NONE

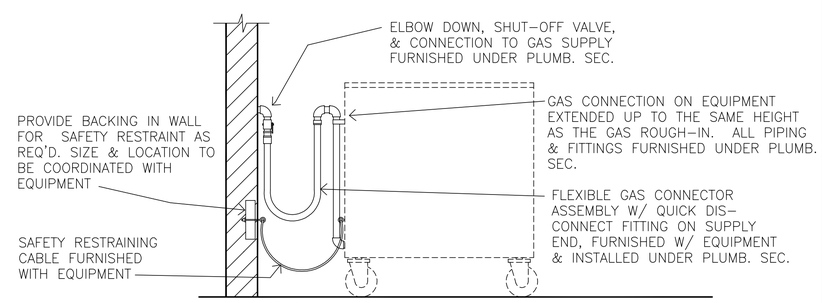

A4 / QF502 GAS CONNECTOR DETAIL
SCALE: NONE

US Army Corps of Engineers
Norfolk District

MARK	DATE	DESCRIPTION	BY	APP

DESIGNED: JK
DRAWN: JK, TJT
PROJECT NO. —
CHECKED: JK
SUBMITTED: JK
NORFOLK DISTRICT FILE NO. —
SPECIFICATION NO. —
DATE: 12/11/09
SCALE: AS NOTED
Plot scale: 1:1

NORFOLK DISTRICT
CORPS OF ENGINEERS
NORFOLK, VIRGINIA

NAO
CENTER OF STANDARDIZATION

DRAWING NO. QF502
Last saved: 12-11-09
File name: QF502.DWG

US ARMY STANDARD DESIGN
1300 TRAINEE DINING FACILITY

FOOD SERVICE DETAILS

SHEET REFERENCE NUMBER
QF502
SHEET OF

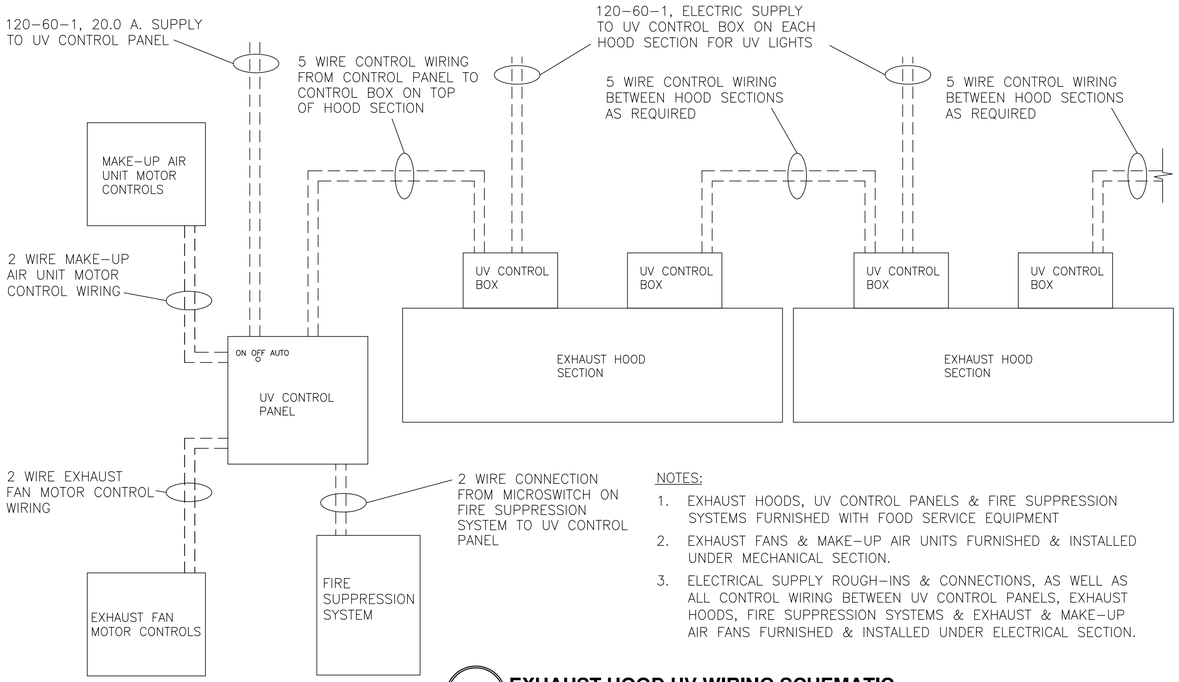

NOTES:

1. EXHAUST HOODS, UV CONTROL PANELS & FIRE SUPPRESSION SYSTEMS FURNISHED WITH FOOD SERVICE EQUIPMENT
2. EXHAUST FANS & MAKE-UP AIR UNITS FURNISHED & INSTALLED UNDER MECHANICAL SECTION.
3. ELECTRICAL SUPPLY ROUGH-INS & CONNECTIONS, AS WELL AS ALL CONTROL WIRING BETWEEN UV CONTROL PANELS, EXHAUST HOODS, FIRE SUPPRESSION SYSTEMS & EXHAUST & MAKE-UP AIR FANS FURNISHED & INSTALLED UNDER ELECTRICAL SECTION.

C1 / QF503 EXHAUST HOOD UV WIRING SCHEMATIC
SCALE: NONE

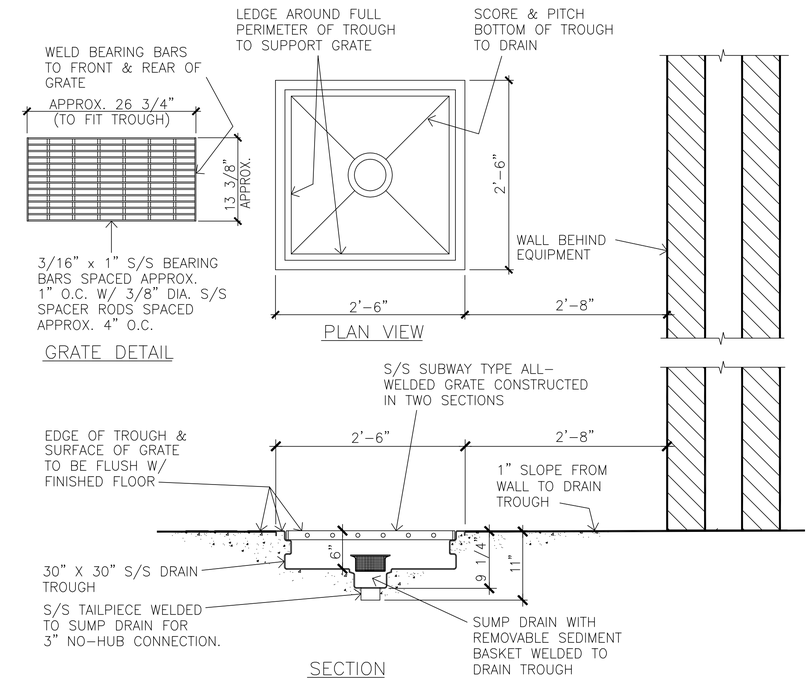

C3 / QF503 DRAIN TROUGH AT BRAISING PANS
SCALE: NONE

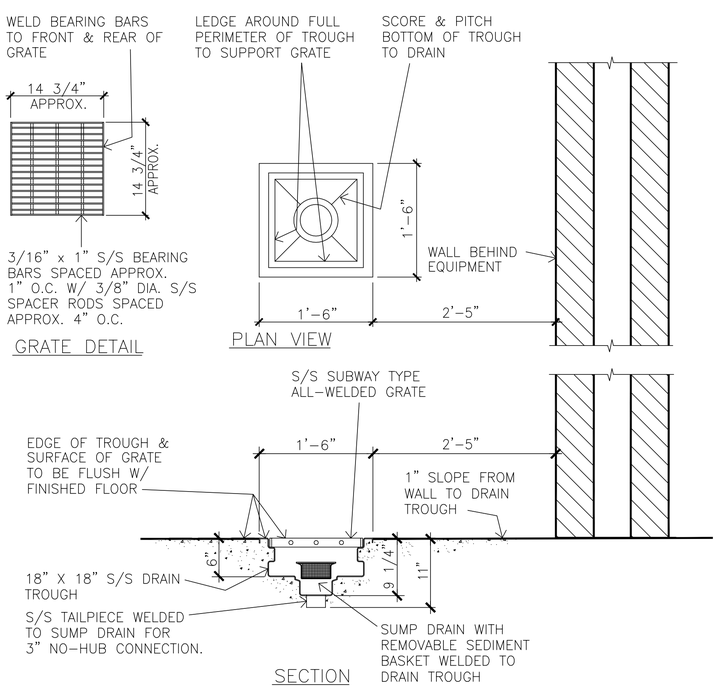

A1 / QF503 DRAIN TROUGH AT KETTLES
SCALE: NONE

NOTE:

1. ALL PIPING, UNIONS, INSULATION AND GATE OR BALL VALVES FURNISHED & INSTALLED UNDER PLUMBING SECTION.
2. PRESSURE RELIEF VALVE, TEMPERATURE/ PRESSURE GAUGES & SHOCK ABSORBER FURNISHED WITH BOOSTER HEATER & INSTALLED UNDER PLUMBING SECTION.

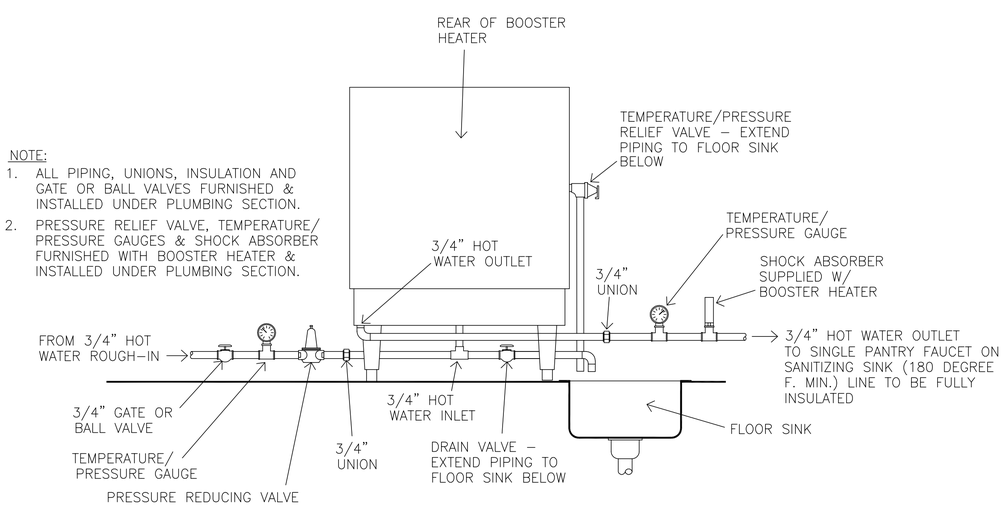

A3 / QF503 BOOSTER HEATER PIPING
SCALE: NONE

US Army Corps of Engineers
Norfolk District

MARK	DATE	DESCRIPTION	BY	APP

DESIGNED: JK | CHECKED: JK | DATE: 12/11/09
DRAWN: JK, TJT | SUBMITTED: JK | SCALE: AS NOTED
PROJECT NO. — | NORFOLK DISTRICT FILE NO. —
DRAWING NO. QF503 | SPECIFICATION NO. —
Last Revised: 12-10-09 | Plot Width: 1:1
File name: QF503.DWG

NORFOLK DISTRICT
CORPS OF ENGINEERS
NORFOLK, VIRGINIA

NAO
CENTER OF STANDARDIZATION

US ARMY STANDARD DESIGN
1300 TRAINEE DINING FACILITY

FOOD SERVICE DETAILS

SHEET REFERENCE NUMBER
QF503
SHEET OF

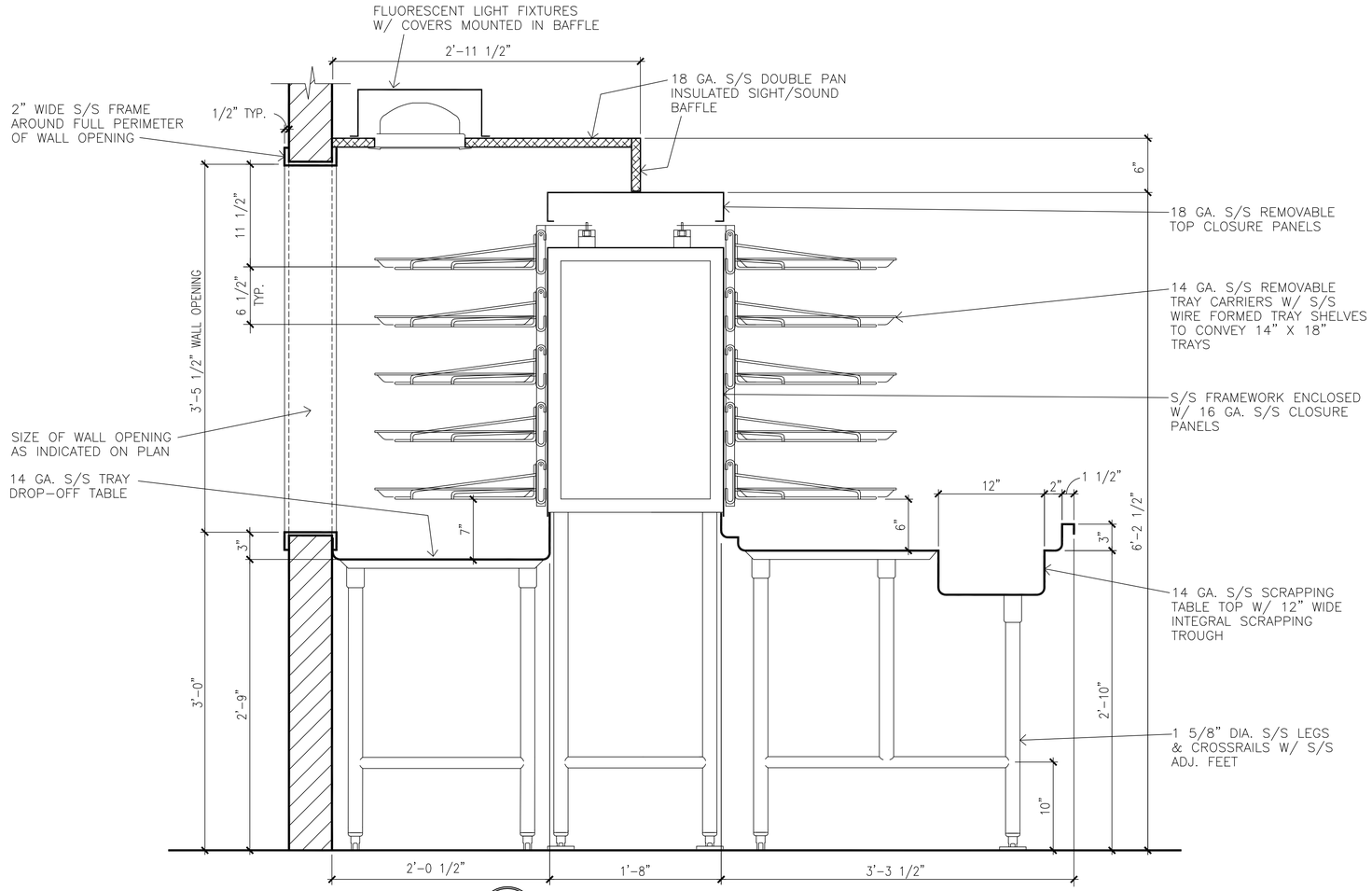

B1 QF504 **TRAY ACCUMULATOR SECTION**
SCALE: NONE

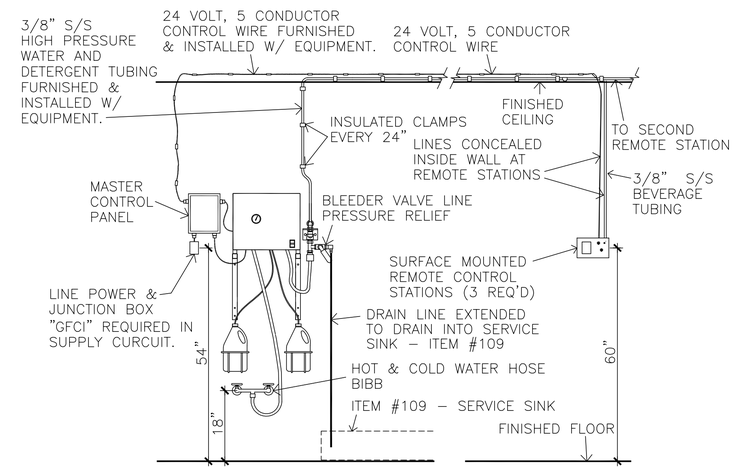

C4 QF504 **CENTRAL PRESSURE CLEANING SYSTEM**
SCALE: NONE

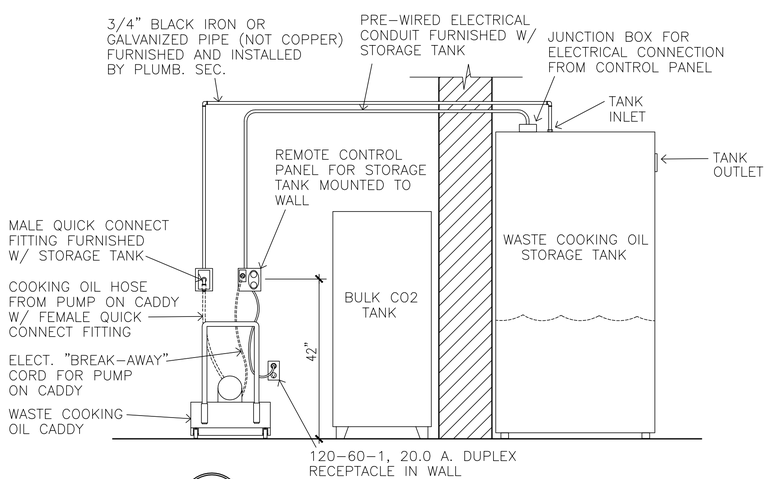

A1 QF504 **WASTE COOKING OIL STORAGE SYSTEM**
SCALE: NONE

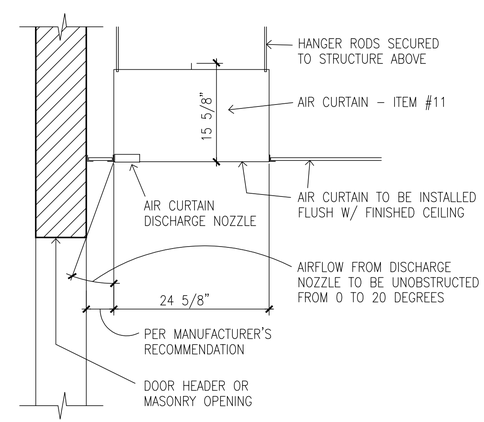

A4 QF504 **AIR CURTAIN SECTION**
SCALE: NONE

US Army Corps of Engineers
Norfolk District

MARK	DATE	DESCRIPTION	BY	APP

DESIGNED: JK | CHECKED: JK | DATE: 12/11/09
DRAWN: JK,TJT | SUBMITTED: JK | SCALE: AS NOTED
PROJECT NO. – | NORFOLK DISTRICT FILE NO. –
DRAWING NO. QF504 | SPECIFICATION NO. –
Last saved on: 12-11-09 | Plot scale: 1:1
File name: QF504.DWG

NORFOLK DISTRICT
CORPS OF ENGINEERS
NORFOLK, VIRGINIA

NAO
CENTER OF STANDARDIZATION

US ARMY STANDARD DESIGN
1300 TRAINEE DINING FACILITY

FOOD SERVICE DETAILS

SHEET REFERENCE NUMBER
QF504
SHEET OF

ITEM NUMBER	QTY.	DESCRIPTION	EQUIP. CLASS	COMMENTS	ELECTRICAL SCHEDULE: ELEC. SYMBOL	VOLTS	PHASE	AMPS	CONN.	HT. A.F.F.	REMARKS	PLUMBING SCHEDULE: PLUMBING SYMBOL	H.W.	C.W.	WASTE SIZE	WASTE TYPE	GAS	GAS MBTU	HT. A.F.F.	REMARKS	VENTILATION SCHEDULE: VENTILATION SYMBOL	QTY.	EXHAUST COLLAR	EXHAUST CFM	SUPPLY COLLAR	SUPPLY CFM	STATIC PRESSURE	HT. A.F.F.
1	1	RECEIVING SCALE ON MOBILE STAND	C	DIAL INDICATING SCALE, 100 LB. CAPACITY																								
2	1	RECEIVING DESK	C	SINGLE PEDESTAL STEEL DESK	2A	120	1	10.0	D.R.	24"	CONVENIENCE RECEPTACLE																	
3	–	NOT USED	–																									
4	4	PLATFORM TRUCKS	C	28" X 60" ALUMINUM PLATFORM																								
5	73	SHELVING UNITS	C	24" X 48" MOBILE SHELVING UNITS																								
6	1	FREEZER COND. UNIT & EVAPORATORS	A		6A	208	3	32.9	J.B.	4"	CONNECT TO CONDENSING UNIT & FROM CONDENSING UNIT TO TWO EVAPORATORS INSIDE WALK-IN – SEE WALK-IN NOTES																	
7	3	REFRIGERATOR COND. UNITS & EVAPORATORS	A		7A	208	3	5.8	J.B.	4"	CONNECT TO CONDENSING UNIT – SEE WALK-IN NOTES																	
					7B	208	3	9.4	J.B.	4"	CONNECT TO CONDENSING UNIT – SEE WALK-IN NOTES																	
					7C	120	1	5.4	J.B.	120"	CONNECT TO EVAPORATOR INSIDE WALK-IN																	
					7D	120	1	7.2	J.B.	120"	CONNECT TO EVAPORATOR INSIDE WALK-IN																	
8	4	DOORWAY CLOSURES	A																									
9	4	FAUCET HOSE STATIONS	A									9A	1/2"						48"	140 DEGREES F. MIN. – CONNECT TO MIXING VALVE, INLETS 6" O.C.								
												9B		1/2"					48"	CONNECT TO MIXING VALVE, INLETS 6" O.C.								
10	1	WALK-IN REFRIGERATORS & FREEZER	A		10A	120	1	8.0	J.B.	113"	CONNECT TO J.B. IN WALK-IN FOR P.W. DOOR LIGHT, DOOR HEATER & FIELD WIRED CENTER LIGHTS, PRESSURE RELIEF PORT AND DRAIN LINE HEAT TAPE	10A			2"	F.F.D.			S.U.	EXTEND DRAIN LINE FROM 5 EVAPORATORS INSIDE WALK-IN							
					10B	120	1	5.0	J.B.	113"	CONNECT TO J.B. IN WALK-IN FOR P.W. DOOR LIGHT, DOOR HEATER & FIELD WIRED CENTER LIGHTS																	
					10C	120	1	6.0	J.B.	113"	CONNECT TO J.B. IN WALK-IN FOR P.W. DOOR LIGHT, DOOR HEATER & FIELD WIRED CENTER LIGHTS																	
11	8	AIR CURTAINS	A		11A	120	1	14.4	J.B.	104"	CONNECT TO DOOR SWITCHES, AND FROM SWITCHES TO AIR CURTAIN																	
					11B	120	1	7.2	J.B.	104"	CONNECT TO DOOR SWITCH, AND FROM SWITCH TO AIR CURTAIN																	
					11C	120	1	14.4	J.B.	–	J.B. ABOVE FINISHED CEILING. CONNECT TO AIR CURTAIN. ALSO INTERWIRE FROM AIR CURTAIN TO DOOR SWITCHES AND TO REMOTE SPEED SELECTOR SWITCH.																	
					11D	120	1	7.2	J.B.	–	J.B. ABOVE FINISHED CEILING. CONNECT TO AIR CURTAIN. ALSO INTERWIRE FROM AIR CURTAIN TO DOOR SWITCH AND TO REMOTE SPEED SELECTOR SWITCH.																	
12	–	NOT USED	–																									
12a	2	CAN RACKS	C																									
13	1	DUNNAGE RACK	C																									
13a	6	CARTS	C	FIELD FEEDING AREA																								
14	1	VEGETABLE PREP SINK	A		14A	120	1	10.0	D.R.	52"	CONVENIENCE RECEPTACLE	14A	1/2"						18"	CONNECT TO FAUCET								
												14B			2"	12" X 12" F.S.			S.U.	EXTEND DRAIN LINE FROM SINK								
												14C		1/2"					18"	CONNECT TO FAUCET								
												14D			3"	12" X 12" F.S.			S.U.	EXTEND DRAIN LINE FROM 2 SINKS								
15	2	DISPOSERS	A		15A	208	3	8.4	J.B.	24"	CONNECT TO SWITCH & FROM SWITCH TO DISPOSER & SOLENOID VALVE	15A			3'	DIRECT			8"	CONNECT TO DISPOSER								
												15B		1/2"					–	CONNECT FROM PRE-RINSE SPRAY C.W. ROUGH-IN – SEE #52A								
16	1	REFRIGERATOR, ROLL-IN	A	TWO SECTION, W/ MOBILE RACKS	16A	120	1	11.4	J.B.	–	PROVIDE J.B. ABOVE CEILING & PENDANT CORD WITH D.R. AT 78" A.F.F.																	
17	9	TABLES	C		17A	120	1	15.0	J.B.	–	PROVIDE J.B. ABOVE CEILING & PENDANT CORD WITH CONVENIENCE D.R. AT 78" A.F.F.																	
					17B	120	1	15.0	D.R.	24"	CONVENIENCE RECEPTACLE																	
					17C	120	1	15.0	D.R.	48"	CONVENIENCE RECEPTACLE																	
18	6	TABLES	C		18A	120	1	15.0	D.R.	24"	CONVENIENCE RECEPTACLE																	
19	3	EQUIPMENT STANDS	C																									
20	2	STORAGE SHELVING SYSTEM	A																									
21	3	TABLES W/ SINK	A		21A	120	1	15.0	J.B.	–	PROVIDE J.B. ABOVE CEILING & PENDANT CORD WITH CONVENIENCE D.R. AT 78" A.F.F.	21A		1/2"					S.U.	CONNECT TO FAUCET								
												21B			2"	12" X 12" F.S			S.U.	EXTEND DRAIN LINE FROM SINK								
												21C	1/2"						S.U.	CONNECT TO FAUCET								
												21D		3/4"					S.U.	CONNECT TO TWO FAUCETS								
												21E			3"	12" X 12" F.S			S.U.	EXTEND DRAIN LINES FROM TWO SINKS								
												21F	3/4"						S.U.	CONNECT TO TWO FAUCETS								
22	2	MEAT SLICING MACHINES	C		22A	120	1	6.0	J.B.	–	PROVIDE J.B. ABOVE CEILING & PENDANT CORD WITH D.R. AT 78" A.F.F.																	

US Army Corps of Engineers
Norfolk District

MARK	DATE	DESCRIPTION	BY	APP

DESIGNED: JK | CHECKED: JK | DATE: 12/11/09
DRAWN: JK, TJT | SUBMITTED: JK | SCALE: NONE
PROJECT NO. – | NORFOLK DISTRICT FILE NO. – | SPECIFICATION NO.
DRAWING NO. QF601 | Plot scale: 1:1
Last saved: Wed Dec 02 11:11:09
File name: QF601.DWG

NORFOLK DISTRICT
CORPS OF ENGINEERS
NORFOLK, VIRGINIA

NAO
CENTER OF STANDARDIZATION

US ARMY STANDARD DESIGN
1300 TRAINEE DINING FACILITY

FOOD SERVICE EQUIPMENT SCHEDULES

SHEET REFERENCE NUMBER
QF601
SHEET OF

ITEM NUMBER	QTY.	DESCRIPTION	EQUIP. CLASS	COMMENTS	ELECTRICAL SCHEDULE: ELEC. SYMBOL	VOLTS	PHASE	AMPS	CONN.	HT. A.F.F.	REMARKS	PLUMBING SCHEDULE: PLUMBING SYMBOL	H.W.	C.W.	WASTE SIZE	WASTE TYPE	GAS	GAS MBTU	HT. A.F.F.	REMARKS	VENTILATION SCHEDULE: VENTILATION SYMBOL	QTY.	EXHAUST COLLAR	EXHAUST CFM	SUPPLY COLLAR	SUPPLY CFM	STATIC PRESSURE	HT. A.F.F.
23	1	VEGETABLE PEELING MACHINE	A	60 LB. W/ DISPOSER AND STAND	23A	208	3	3.8	J.B.	24"	CONNECT TO PEELER	23A			2"	DIRECT			8"	CONNECT TO DISPOSER BELOW PEELER								
					23B	208	1	7.7	J.B.	24"	CONNECT TO DISPOSER BELOW PEELER	23B		1/2"					24"	CONNECT TO COMMON WATER CONNECTION ON PEELER/DISPOSER UNIT								
24	1	WASTE PULPER	A	CLOSE-COUPLED PULPER & EXTRACTOR	24A	480	3	20.0	J.B.	72"	CONNECT TO WALL MOUNTED CONTROL PANEL & FROM CONTROL PANEL TO WASTE PULPER	24A			3"	12" X 12" F.S.			S.U.	PROVIDE 3/4 GRATE AND EXTEND DRAIN LINE FROM DRAIN VALVE ON PULPER								
												24B		1/2"					18"	CONNECT TO PULPER. 60 G.P.H. REQUIRED AT 30 P.S.I.								
												24C	1/2"						18"	CONNECT TO PULPER. 60 G.P.H. REQUIRED AT 30 P.S.I.								
25	1	FOOD PROCESSOR	C		25A	120	1	10.0	J.B.	–	PROVIDE J.B. ABOVE CEILING & PENDANT CORD WITH D.R. AT 78" A.F.F.																	
26	3	POT RACKS	A	OVERHEAD RACK MOUNTED ON ITEM #21																								
27	1	RANGE	A	4 BURNER, HEAVY DUTY	27A	120	1	1.0	D.R.	24"	ELECTRONIC IGNITION	27A					3/4"	250	30"	CONNECT TO GAS SUPPLY WITH FLEXIBLE CONNECTOR ASSEMBLY FURNISHED WITH EQUIPMENT. SEE DETAIL # A4/QF502								
28	2	BRAISING PANS	A	40 GALLONS	28A	120	1	10.0	D.R.	18"	BRAISING PAN CONTROLS	28A					3/4"	200	12"	CONNECT TO BRAISING PAN								
29	1	CENTRAL PRESSURE CLEANING SYSTEM	A		29A	208	1	9.0	J.B.	54"	CONNECT TO MASTER CONTROL PANEL FOR CENTRAL PRESSURE CLEANING SYSTEM (GFCI PROTECTION REQUIRED). ALSO EXTEND 24 VOLT CONTROL WIRING (FIVE CONDUCTOR, DOUBLE INSULATED) FROM MASTER CONTROL PANEL TO #29B REMOTE CONTROL PANELS (THREE PLACES). SEE DETAIL #C4/QF504	29A	1/2"						18"	PROVIDE HOT AND COLD WATER HOSE BIBB. SEE DETAIL #C4/QF504								
					29B				E.C.	60"	EXTEND 24 VOLT CONTROL WIRING (FIVE CONDUCTOR, DOUBLE INSULATED) FROM MASTER CONTROL PANEL ON CENTRAL PRESSURE CLEANING SYSTEM AND CONNECT TO REMOTE CONTROL PANEL. SEE DETAIL #C4/QF504	29B		1/2"					18"	PROVIDE HOT AND COLD WATER HOSE BIBB. SEE DETAIL #C4/QF504								
												29C			1/2"	INDIRECT			60"	EXTEND DRAIN LINE FROM BLEEDER VALVE LINE PRESSURE RELIEF VALVE TO DRAIN INTO SERVICE SINK – ITEM #109. SEE DETAIL #C4/QF504								
												29D							54"	EXTEND 3/8" STAINLESS STEEL HIGH PRESSURE WATER AND DETERGENT TUBING FROM CENTRAL PRESSURE CLEANING SYSTEM TO HOSE OUTLETS AT REMOTE STATIONS #29E (THREE PLACES). HIGH PRESSURE TUBING SHALL BE EXTENDED ABOVE FINISHED CEILING AND SHALL BE SECURED W/ CUSHIONED STRAPS 24" ON CENTER. SEE DETAIL #C4/QF504								
												29E							60"	REMOTE OUTLET FOR CENTRAL PRESSURE CLEANING SYSTEM. EXTEND 3/8" STAINLESS STEEL HIGH PRESSURE WATER AND DETERGENT TUBING FROM #29D. SEE DETAIL #C4/QF504								
30	2	FLOOR TROUGHS W/ GRATE	A									30A			3"	DIRECT			S.U.	CONNECT TO RECESSED TROUGH IN FLOOR – SEE DETAIL # C3/QF503								
31	1	FREEZER	A	TWO SECTION, REACH-IN	31A	120	1	14.9	J.B.	–	PROVIDE J.B. ABOVE CEILING & PENDANT CORD WITH D.R. AT 90" A.F.F. – NEMA #5-20P PLUG FURNISHED ON FREEZER																	
32	3	CONVECTION OVENS	A	DOUBLE DECK	32A	120	1	6.0+6.0	D.R.	48"	OVEN FAN MOTORS	32A					3/4"	120	30"	MANIFOLD TWO OVEN DECKS TOGETHER & CONNECT TO GAS SUPPLY WITH FLEXIBLE CONNECTOR ASSEMBLY FURNISHED WITH EQUIPMENT. SEE DETAIL # A4/QF502								
32a	1	COMBINATION OVEN/STEAMER	A	ROLL-IN	32aA	120	1	15.0	D.R.	48"		32aA					1"	215	18"	CONNECT TO COMBINATION OVEN/STEAMER								
												32aB		3/4"					18"	CONNECT TO CONDENSER INLET, & THROUGH WATER FILTER TO STEAM GENERATOR INLET. 40-50 P.S.I. REQUIRED. WATER FILTER FURNISHED WITH EQUIPMENT & MOUNTED TO WALL AT 48" A.F.F. BACKFLOW PREVENTER REQUIRED.								
												32aC			2"	12" X 12" F.S.			S.U.	EXTEND DRAIN LINE FROM COMBINATION OVEN/STEAMER								
33	2	CAN OPENERS	C		–	120	1	1.2	–	–	PLUGS INTO #17A & #21A																	
34	1	MIXING MACHINE	A	60 QUART	34A	208	3	10	J.B.	–	PROVIDE J.B. ABOVE CEILING & PENDANT CORD WITH S.R. AT 78" A.F.F. ALSO FURNISH & INSTALL CORD & PLUG ON MIXER TO MATCH RECEPTACLE.																	
35	1	MIXING MACHINE	C	20 QUART	35A	120	1	8.2	J.B.	–	PROVIDE J.B. ABOVE CEILING & PENDANT CORD WITH D.R. AT 78" A.F.F.																	
36	2	KETTLES	A	40 GALLON	36A	120	1	10.0	D.R.	18"	KETTLE CONTROLS	36A					3/4"	140	18"	CONNECT TO KETTLE								
												36B		1/2"					36"	CONNECT TO FAUCET ON KETTLE								
												36C	1/2"						36"	CONNECT TO FAUCET ON KETTLE								
37	–	NOT USED	–																									
38	2	KETTLES W/ STAND	A	(2) 6 GALLON SELF-CONTAINED KETTLES W/ STAND	38A	480	3	19.6	J.B.	24"	CONNECT TO KETTLES	38A			3"	12" X 12" F.S.			S.U.	EXTEND DRAIN LINES FROM TWO KETTLE STANDS								
												38B		3/4"					24"	CONNECT TO FAUCETS ON TWO KETTLE STANDS								
												38C	3/4"						24"	CONNECT TO FAUCETS ON TWO KETTLE STANDS								

US Army Corps of Engineers
Norfolk District

MARK	DATE	DESCRIPTION	BY	APP

DESIGNED: JK | CHECKED: JK | DATE: 12/11/09
DRAWN: JK,TJT | SUBMITTED: JK | SCALE: NONE
PROJECT NO. – | NORFOLK DISTRICT FILE NO. –
DRAWING NO. QF602 | SPECIFICATION NO.
Last Revised: 12-11-09 | Plot scale: 1:1
File name: QF602.DWG

NORFOLK DISTRICT
CORPS OF ENGINEERS
NORFOLK, VIRGINIA

NAO
CENTER OF STANDARDIZATION

US ARMY STANDARD DESIGN
1300 TRAINEE DINING FACILITY

FOOD SERVICE EQUIPMENT SCHEDULES

SHEET REFERENCE NUMBER
QF602
SHEET OF

					ELECTRICAL SCHEDULE							PLUMBING SCHEDULE									VENTILATION SCHEDULE							
ITEM NUMBER	QTY.	DESCRIPTION	EQUIP. CLASS	COMMENTS	ELEC. SYMBOL	VOLTS	PHASE	AMPS	CONN.	HT. A.F.F.	REMARKS	PLUMBING SYMBOL	H.W.	C.W.	WASTE SIZE	WASTE TYPE	GAS	GAS MBTU	HT. A.F.F.	REMARKS	VENTILATION SYMBOL	QTY.	EXHAUST COLLAR	EXHAUST CFM	SUPPLY COLLAR	SUPPLY CFM	STATIC PRESSURE	HT. A.F.F.
39	1	EXHAUST HOOD – ISLAND TYPE	A	(4) UV TYPE EXHAUST HOOD SECTIONS	39A	120	1	4.0	J.B.	48"	PROVIDE SWITCH IN WALL AT 48" A.F.F. AND EXTEND CONDUIT & WIRING IN A CONCEALED MANNER TO J.B.'S ON TOP EXTERIOR OF HOOD SECTIONS FOR COMPACT FLUORESCENT HOOD LIGHTS										39A	4	10" X 25"	3060 EA.			1.60"	108"
					39B	120	1	12.0	E.C.	104"	CONNECT TO UV CONTROL BOX ON TOP OF EXHAUST HOOD SECTION FOR UV LIGHTS. SEE UV WIRING SCHEMATIC DETAIL #C1/QF503										39B	8			12" X 19"	1,225 EA.	0.20"	108"
					39C	120	1	20.0	E.C.	60"	CONNECT TO UV CONTROL PANEL. ALSO PROVIDE CONTROL INTERWIRING FROM CONTROL PANEL TO UV CONTROL BOXES ON TOP OF 4 EXHAUST HOOD SECTIONS (ITEM #39), 2 EXHAUST HOOD SECTIONS (ITEM #39a), TO EXHAUST FAN, TO MAKE-UP AIR UNIT & TO FIRE SUPPRESSION SYSTEMS – ITEMS #41 AND #41a AS REQUIRED. SEE UV WIRING SCHEMATIC DETAIL #C1/QF503																	
39a	1	EXHAUST HOOD – WALL TYPE	A	(2) UV TYPE EXHAUST HOOD SECTIONS	39aA	120	1	2.0	J.B.	48"	PROVIDE SWITCH IN WALL AT 48" A.F.F. AND EXTEND CONDUIT & WIRING IN A CONCEALED MANNER TO J.B.'S ON TOP EXTERIOR OF HOOD SECTIONS FOR COMPACT FLUORESCENT HOOD LIGHTS										39aA	2	10" X 15"	1,915 EA.			1.60"	108"
					39aB	120	1	12.0	J.B.	108"	CONNECT TO UV CONTROL BOX ON TOP OF EXHAUST HOOD SECTION FOR UV LIGHTS. SEE UV WIRING SCHEMATIC DETAIL #C1/QF503										39aB	2			12" X 24"	1,530 EA.	0.20"	108"
40	2	FLOOR TROUGHS W/ GRATES	A									40A			3"	DIRECT			S.U.	CONNECT TO RECESSED TROUGH IN FLOOR – SEE DETAIL # A1/QF503								
41	1	FIRE SUPPRESSION SYSTEM	A	SERVES EXHAUST HOOD #39	41A	120	1	20.0	J.B.	96"	CONNECT TO MICROSWITCH ON WET CHEMICAL FIRE SUPPRESSION SYSTEM & RUN CONDUIT AND WIRE IN A CONCEALED MANNER TO FUEL AND POWER SHUT-OFF DEVICES FOR ALL APPLIANCES LOCATED UNDER THE EXHAUST HOOD. THIS SYSTEM SERVES ITEM #39. ALSO CONNECT TO BUILDING FIRE ALARM SYSTEM AS REQUIRED.																	
					41B				J.B.	48"	PROVIDE CONCEALED CONDUIT AND RECESSED JUNCTION BOX IN WALL FOR REMOTE MANUAL PULL STATION FOR FIRE SUPPRESSION SYSTEM. SEE DETAIL # A2/QF502																	
41a	1	FIRE SUPPRESSION SYSTEM	A	SERVES EXHAUST HOOD #39a	41aA	120	1	20.0	J.B.	96"	CONNECT TO MICROSWITCH ON WET CHEMICAL FIRE SUPPRESSION SYSTEM & RUN CONDUIT AND WIRE IN A CONCEALED MANNER TO FUEL AND POWER SHUT-OFF DEVICES FOR ALL APPLIANCES LOCATED UNDER THE EXHAUST HOOD. THIS SYSTEM SERVES ITEM #39a. ALSO CONNECT TO BUILDING FIRE ALARM SYSTEM AS REQUIRED.																	
					41aB				J.B.	48"	PROVIDE CONCEALED CONDUIT AND RECESSED JUNCTION BOX IN WALL FOR REMOTE MANUAL PULL STATION FOR FIRE SUPPRESSION SYSTEM. SEE DETAIL # A2/QF502																	
42	1	FRYERS & FILTER	A	BATTERY OF (3) 130 LB. FRYERS W/ FILTER SYSTEM	42A	120	1	1.0 + 1.0	D.R.	18"	FRYER CONTROLS FOR TWO FRYERS	42A					1-1/4"	503 TOTAL	30"	MANIFOLD 3 FRYERS TOGETHER & CONNECT TO GAS SUPPLY WITH FLEXIBLE CONNECTOR ASSEMBLY FURNISHED WITH EQUIPMENT. SEE DETAIL # A4/QF502								
					42B	120	1	1.0+5.6	D.R.	18"	FRYER CONTROLS FOR ONE FRYER & FILTER PUMP																	
43	2	FRYERS	A	BATTERY OF (2) 68 LB. FRYERS	43A	120	1	1.0 + 1.0	D.R.	18"	FRYER CONTROLS FOR TWO FRYERS	43A					1"	268 TOTAL	30"	MANIFOLD 2 FRYERS TOGETHER & CONNECT TO GAS SUPPLY WITH FLEXIBLE CONNECTOR ASSEMBLY FURNISHED WITH EQUIPMENT. SEE DETAIL # A4/QF502								
44	2	FILTER STATIONS	A	CONNECTED TO ITEM #43	44A	120	1	5.6 + 4.0	D.R.	18"	FILTER PUMP & HEAT LAMPS																	
45	3	POT FILLER/SPRAY HOSE ASSEMBLIES	A									45A	1/2"						48"	CONNECT TO WALL MOUNTED FAUCET, INLETS 8" O.C.								
												45B		1/2"					48"	CONNECT TO WALL MOUNTED FAUCET, INLETS 8" O.C.								
46	1	TABLE, BAKERS	C		46A	120	1	15.0	J.B.	–	PROVIDE J.B. ABOVE CEILING & PENDANT CORD WITH CONVENIENCE D.R. AT 78" A.F.F.																	

US Army Corps of Engineers
Norfolk District

MARK	DATE	DESCRIPTION	BY	APP

DESIGNED: JK | CHECKED: JK | DATE: 12/11/09
DRAWN: JK,TJT | SUBMITTED: JK | SCALE: NONE
PROJECT NO. – | NORFOLK DISTRICT FILE NO. –
DRAWING NO. QF603 | SPECIFICATION NO.
Last Revised: 12-11-09 | Plot scale: 1:1
File name: QF603.DWG

NORFOLK DISTRICT
CORPS OF ENGINEERS
NORFOLK, VIRGINIA

NAO
CENTER OF STANDARDIZATION

US ARMY STANDARD DESIGN
1300 TRAINEE DINING FACILITY

FOOD SERVICE EQUIPMENT SCHEDULES

SHEET REFERENCE NUMBER
QF603
SHEET OF

					ELECTRICAL SCHEDULE							PLUMBING SCHEDULE									VENTILATION SCHEDULE							
ITEM NUMBER	QTY.	DESCRIPTION	EQUIP. CLASS	COMMENTS	ELEC. SYMBOL	VOLTS	PHASE	AMPS	CONN.	HT. A.F.F.	REMARKS	PLUMBING SYMBOL	H.W.	C.W.	WASTE SIZE	WASTE TYPE	GAS	GAS MBTU	HT. A.F.F.	REMARKS	VENTILATION SYMBOL	QTY.	EXHAUST COLLAR	EXHAUST CFM	SUPPLY COLLAR	SUPPLY CFM	STATIC PRESSURE	HT. A.F.F.
47	2	STEAMERS	A	W/(2) COMPARTMENTS, W/ (8) 2-1/2" DEEP PANS PER COMPARTMENT	47A	120	1	1.0	J.B.	18"	CONNECT TO STEAMER	47A			3"	12" X 12" F.S.			S.U.	EXTEND DRAIN LINES FROM TWO STEAMERS								
												47B					1"	300	12"	CONNECT TO STEAMER								
												47C		1/2"					12"	CONNECT TO CONDENSER INLET ON STEAMER. 35-60 P.S.I. REQUIRED. BACKFLOW PREVENTER REQUIRED.								
												47D		3/4"					96"	CONNECT TO TWO WALL MOUNTED WATER FILTERS, AND FROM WATER FILTERS TO STEAM GENERATOR INLETS ON TWO STEAMERS. 35-60 P.S.I. REQUIRED. BACKFLOW PREVENTER REQUIRED. WATER FILTERS FURNISHED WITH EQUIPMENT.								
48	9	HAND SINKS	A									48A	1/2"						24"	CONNECT TO FAUCET								
												48B			1-1/2"	DIRECT			20"	CONNECT TO SINK								
												48C		1/2"					24"	CONNECT TO FAUCET								
49	3	INGREDIENT BINS, MOBILE	C																									
50	1	UTENSIL WASHER	A	W/ BUILT-IN BOOSTER HEATER	50A	480	3	22.0	J.B.	24"	CONNECT TO UTENSIL WASHER	50A			3"	12" X 12" F.S.			S.U.	EXTEND DRAIN LINES FROM UTENSIL WASHER AND FROM EXHAUST HOOD - ITEM #55								
					50B	480	3	34.0	J.B.	24"	CONNECT TO BOOSTER HEATER CONNECTION ON UTENSIL WASHER	50B	1"						12"	CONNECT TO UTENSIL WASHER. 140 DEGREES F. MIN. AT 20-22 P.S.I. REQUIRED								
51	1	POT & PAN SINK	A	W/ RECIRCULATION UNIT ON WASH COMPARTMENT	51A	480	3	11.6	J.B.	18"	CONNECT TO POWER SOAK CONTROL PANEL	51A	3/4"						18"	CONNECT TO FAUCET								
												51B		3/4"					18"	CONNECT TO FAUCET								
												51C			2"	DIRECT			15"	CONNECT DRAIN LINE TO 3 SINKS & EXTEND TO GREASE INTERCEPTOR AS REQ'D.								
51a	1	BOOSTER HEATER	A	TO HEAT WATER TO FILL RINSE COMPARTMENT	51aA	480	3	21.7	J.B.	12"	CONNECT TO BOOSTER HEATER	51aA	3/4"						18"	CONNECT TO BOOSTER HEATER. 140 DEGREES F. MIN. REQUIRED								
												51aB	3/4"						6"	H.W. OUTLET ON BOOSTER HEATER. CONNECT TO SINGLE PANTRY FAUCET OVER SANITIZING SINK COMPARTMENT WITH INSULATED LINE								
												51aC			2"	12" X 12" F.S.			S.U.	EXTEND DRAIN LINES FROM BOOSTER HEATER, FROM SINK HEATER - ITEM #54 AND FROM EXHAUST HOOD - ITEM #53								
52	2	PRE-RINSE SPRAYS	A									52A		3/4"					18"	CONNECT TO FAUCET & DISPOSER								
												52B	1/2"						18"	CONNECT TO FAUCET								
												52C								NOT USED								
53	1	EXHAUST HOOD	A	CONDENSATE HOOD OVER RINSE COMPARTMENT								-			1/2"	INDIRECT			80"	EXTEND CONDENSATE DRAIN LINE FROM EXHAUST HOOD TO F.S. #51aC	53A	1	7" X 7"	600			0.25"	108"
54	1	SINK HEATER	A	TO MAINTAIN HEAT IN RINSE COMPARTMENT	54A	208	3	25.0	J.B.	12"	CONNECT TO SINK HEATER																	
55	1	EXHAUST HOOD	A	CONDENSATE HOOD OVER UTENSIL WASHER								-			1/2"	INDIRECT			96"	EXTEND CONDENSATE DRAIN LINE FROM EXHAUST HOOD TO F.S. #50A	55A	1	8" X 8"	750			0.25"	124"
56	10	POT & PAN RACKS	C																									
56a	1	MIXER ACCESSORY RACK	C		56aA						NOT USED																	
57	4	HEAD COUNT STATIONS	-	MILLWORK																								
58	10	SALAD BAR COUNTERS	A		58A	120	1	13.7	D.R.	18"	COLD PAN AND LIGHTS	58A			2"	F.F.D.			S.U.	EXTEND DRAIN LINES FROM TWO SALAD BAR COUNTERS								
					58B	120	1	8.0	D.R.	18"	COLD PAN AND LIGHTS	58B			2"	F.F.D.			S.U.	EXTEND DRAIN LINE FROM ONE SALAD BAR COUNTER								
59	4	SOUP STATIONS	A		59A	120	1	16.0	D.R.	18"	TWO SOUP WELLS AND LIGHTS	59A			2"	F.F.D.			S.U.	EXTEND DRAIN LINES FROM DRAIN VALVES ON TWO SOUP WELLS								
60	2	BREAD DISPENSERS	C																									
61	2	BUTTER DISPENSERS	C																									
62	20	PLATE DISPENSERS	C		62A	120	1	10.0	D.R.	24"	CONVENIENCE RECEPTACLE																	
63	2	COLD PANS (3 WELLS)	A		63A	120	1	7.8	D.R.	18"		63A			2"	F.F.D.			S.U.	EXTEND DRAIN LINE FROM COLD PAN								
63a	2	SHELF PROTECTORS (LIGHTED)	A		63aA	120	1	2.0	D.R.	18"																		
64	2	FITNESS BAR COUNTERS	A		64A	120	1	10.0	J.B.	18"	CONNECT TO J.B. IN BASE FOR P.W. CONVENIENCE D.R. IN COUNTER																	
64a	2	TRAY SLIDES	A																									
65	1	UTENSIL TABLE	A																									
66	4	HOT FOOD WARMER (6 WELLS)	A		66A	208	1	24.5	S.R.	18"	NEMA #L6-50P PLUG FURNISHED ON EQUIPMENT	66A			2"	F.F.D.			S.U.	EXTEND DRAIN LINE FROM DRAIN VALVE ON HOT FOOD WARMER								
												66B	1/2"						18"	CONNECT TO FILL FAUCET								
66a	4	SHELF PROTECTORS (LIGHTED)	A		66aA	120	1	3.0	D.R.	18"																		
67	4	HOT/GRILL COUNTERS	A		67A	120	1	10.0	J.B.	18"	CONNECT TO J.B. IN BASE FOR P.W. CONVENIENCE D.R. IN COUNTER																	
					67B	120	1	10.0	D.R.	48"	CONVENIENCE RECEPTACLE																	
67a	2	TRAY SLIDES	A																									
68	6	DINNER PLATE DISPENSERS	C																									

US Army Corps of Engineers
Norfolk District

MARK	DATE	DESCRIPTION	BY	APP

DESIGNED: JK | CHECKED: JK | DATE: 12/11/09
DRAWN: JK,TJT | SUBMITTED: JK | SCALE: NONE
PROJECT NO. - | NORFOLK DISTRICT FILE NO. -
DRAWING NO. QF604 | SPECIFICATION NO. -
Last revised on: Oct-09 | Plot scale: 1:1
File name: QF604.DWG

NORFOLK DISTRICT
CORPS OF ENGINEERS
NORFOLK, VIRGINIA

NAO
CENTER OF STANDARDIZATION

US ARMY STANDARD DESIGN
1300 TRAINEE DINING FACILITY

FOOD SERVICE EQUIPMENT SCHEDULES

SHEET REFERENCE NUMBER
QF604
SHEET OF

					ELECTRICAL SCHEDULE							PLUMBING SCHEDULE									VENTILATION SCHEDULE							
ITEM NUMBER	QTY.	DESCRIPTION	EQUIP. CLASS	COMMENTS	ELEC. SYMBOL	VOLTS	PHASE	AMPS	CONN.	HT. A.F.F.	REMARKS	PLUMBING SYMBOL	H.W.	C.W.	WASTE SIZE	WASTE TYPE	GAS	GAS MBTU	HT. A.F.F.	REMARKS	VENTILATION SYMBOL	QTY.	EXHAUST COLLAR	EXHAUST CFM	SUPPLY COLLAR	SUPPLY CFM	STATIC PRESSURE	HT. A.F.F.
69	4	GRIDDLES	A									69A					3/4"	120	S.U.	EXTEND GAS PIPING UP TO HEIGHT OF CONNECTION ON GRIDDLE AND CONNECT TO GAS SUPPLY WITH FLEXIBLE CONNECTOR ASSEMBLY FURNISHED WITH EQUIPMENT. SEE DETAIL # A4/QF502								
70	4	GRIDDLE STANDS	A																									
70a	4	SPLASH GUARDS	A																									
71	4	EXHAUST HOODS – ISLAND TYPE	A	UV TYPE	71A	120	1	1.0	J.B.	48"	PROVIDE SWITCH IN WALL AT 48" A.F.F. AND EXTEND CONDUIT & WIRING IN A CONCEALED MANNER TO J.B. ON TOP EXTERIOR OF HOOD OVER GRIDDLE FOR COMPACT FLUORESCENT HOOD LIGHTS										71A	4	10" X 17"	2,100 EA.			1.60"	108"
					71B	120	1	2.0 TOTAL	J.B.	48"	PROVIDE SWITCH IN WALL AT 48" A.F.F. AND EXTEND CONDUIT & WIRING IN A CONCEALED MANNER TO J.B.'S ON TOP EXTERIOR OF HOOD OVER GRIDDLE AND HOOD OVER FRYERS FOR COMPACT FLUORESCENT HOOD LIGHTS										71B	4			12" X 24"	1,680 EA.	0.20"	108"
					71C	120	1	6.0	E.C.	104"	CONNECT TO UV CONTROL BOX ON TOP OF EXHAUST HOOD FOR UV LIGHTS. SEE UV WIRING SCHEMATIC DETAIL # C1/QF503																	
					71D	120	1	20.0	E.C.	60"	CONNECT TO UV CONTROL PANEL. ALSO PROVIDE CONTROL INTERWIRING FROM CONTROL PANEL TO UV CONTROL BOXES ON TOP OF ONE EXHAUST HOOD #71 IN SERVICE AREA #1, ONE EXHAUST HOOD #71 IN SERVICE AREA #2 AND ONE EXAUST HOOD #71a IN SERVICE AREA #2 (3 HOODS). ALSO CONNECT TO EXHAUST FAN(S), TO MAKE-UP AIR UNIT(S) & TO FIRE SUPPRESSION SYSTEMS – ITEM #72 AS REQUIRED. SEE UV WIRING SCHEMATIC DETAIL # C1/QF503																			
					71E	120	1	20.0	E.C.	60"	CONNECT TO UV CONTROL PANEL. ALSO PROVIDE CONTROL INTERWIRING FROM CONTROL PANEL TO UV CONTROL BOXES ON TOP OF ONE EXHAUST HOOD #71 IN SERVICE AREA #1, ONE EXHAUST HOOD #71 IN SERVICE AREA #3 AND ONE EXAUST HOOD #71a IN SERVICE AREA #3 (3 HOODS). ALSO CONNECT TO EXHAUST FAN(S), TO MAKE-UP AIR UNIT(S) & TO FIRE SUPPRESSION SYSTEMS – ITEM #72 AS REQUIRED. SEE UV WIRING SCHEMATIC DETAIL # C1/QF503																			
71a	2	EXHAUST HOODS – WALL TYPE	A	UV TYPE	71aA	120	1	6.0	J.B.	108"	CONNECT TO UV CONTROL BOX ON TOP OF EXHAUST HOOD FOR UV LIGHTS. SEE UV WIRING SCHEMATIC DETAIL # C1/QF503										71aA	2	10" X 12"	1,530			1.60"	108"
																					71aB	2			12" X 24"	1,225	0.20"	108"
72	4	FIRE SUPPRESSION SYSTEMS	A	SERVES EXHAUST HOODS #71 AND 71a	72A	120	1	20.0	J.B.	96"	CONNECT TO MICROSWITCH ON WET CHEMICAL FIRE SUPPRESSION SYSTEM & RUN CONDUIT AND WIRE IN A CONCEALED MANNER TO FUEL AND POWER SHUT-OFF DEVICES FOR ALL APPLIANCES LOCATED UNDER THE EXHAUST HOODS. THIS SYSTEM SERVES ONE EXHAUST HOOD ITEM #71. ALSO CONNECT TO BUILDING FIRE ALARM SYSTEM AS REQUIRED.																	
					72B	120	1	20.0	J.B.	96"	CONNECT TO MICROSWITCH ON WET CHEMICAL FIRE SUPPRESSION SYSTEM & RUN CONDUIT AND WIRE IN A CONCEALED MANNER TO FUEL AND POWER SHUT-OFF DEVICES FOR ALL APPLIANCES LOCATED UNDER THE EXHAUST HOODS. THIS SYSTEM SERVES ONE EXHAUST HOOD ITEM #71 AND ONE EXHAUST HOOD ITEM #71a. ALSO CONNECT TO BUILDING FIRE ALARM SYSTEM AS REQUIRED.																	
					72C				J.B.	48"	PROVIDE CONCEALED CONDUIT AND RECESSED JUNCTION BOX IN WALL FOR REMOTE MANUAL PULL STATION FOR FIRE SUPPRESSION SYSTEM. SEE DETAIL # A2/QF502																	
73	2	PASS THRU HEATED CABINETS	A	TWO SECTION REACH-IN	73A	120/208	1	19.8	J.B.	88"	CONNECT TO PASS-THRU HEATED CABINET																	
74	2	PASTRY STORAGE CABINETS	C																									
75	4	DESSERT COUNTERS	A		75A	120	1	13.7	D.R.	18"	COLD PAN AND LIGHTS	75A			2"	F.F.D.			S.U.	EXTEND DRAIN LINE FROM COLD PAN								
76	–	NOT USED	–																									
77	–	NOT USED	–																									
77a	4	TRAY SLIDES	A		77aA	120	1	10.0	D.R.	24"	CONVENIENCE RECEPTACLE																	
78	2	PASS THRU REFRIGERATORS	A	TWO SECTION REACH-IN	78A	120	1	11.0	D.R.	88"																		

US Army Corps of Engineers
Norfolk District

MARK	DATE	DESCRIPTION	BY	APP

DESIGNED: JK | CHECKED: JK | DATE: 11-13-09
DRAWN: JK,TJT | SUBMITTED: JK | SCALE: NONE
PROJECT NO. – | NORFOLK DISTRICT FILE NO. – | SPECIFICATION NO.
DRAWING NO. QF605
Last Revised on 11-13-09 | Plot scale: 1:1
File name: QF605.DWG

NORFOLK DISTRICT
CORPS OF ENGINEERS
NORFOLK, VIRGINIA

1300 - PERSON TRAINEE
DINING FACILITY PROTOTYPE

FOOD SERVICE EQUIPMENT SCHEDULES

SHEET REFERENCE NUMBER
QF605
SHEET OF

					ELECTRICAL SCHEDULE							PLUMBING SCHEDULE									VENTILATION SCHEDULE							
ITEM NUMBER	QTY.	DESCRIPTION	EQUIP. CLASS	COMMENTS	ELEC. SYMBOL	VOLTS	PHASE	AMPS	CONN.	HT. A.F.F.	REMARKS	PLUMBING SYMBOL	H.W.	C.W.	WASTE SIZE	WASTE TYPE	GAS	GAS MBTU	HT. A.F.F.	REMARKS	VENTILATION SYMBOL	QTY.	EXHAUST COLLAR	EXHAUST CFM	SUPPLY COLLAR	SUPPLY CFM	STATIC PRESSURE	HT. A.F.F.
79	4	TOASTERS	C		79A	208	1	24.0	S.R.	24"	VERIFY ELECTRICAL REQUIREMENTS W/ GOVERNMENT FURNISHED EQUIPMENT																	
80	3	BEVERAGE COUNTERS W/ TROUGHS	A									–				INDIRECT			32"	EXTEND DRAIN LINES FROM TWO DRIP TROUGHS TO #84B								
81	1	BEVERAGE COUNTER W/ TROUGHS	A									–				INDIRECT			32"	EXTEND DRAIN LINES FROM THREE DRIP TROUGHS TO #84C								
82	4	FRUIT JUICE DISPENSERS	C		82A	120	1	15.0	D.R.	18"		–		1/2"					34"	CONNECT C.W. FROM #84A								
83	2	SANDWICH UNITS W/ SNEEZE GUARD	C		83A	120	1	8.6	D.R.	18"																		
84	4	ICE AND SODA DISPENSERS	L	MANUAL LOAD ICE DISPENSER W/ SODA VALVES	84A	120	1	15.0	F.R.	18"	ICE AND SODA DISPENSER AND CARBONATOR IN BASE OF COUNTER. VERIFY ELECTRICAL REQUIREMENTS W/ VENDOR FURNISHED EQUIPMENT	84A		3/4"					S.U.	CONNECT TO CARBONATOR IN BASE OF COUNTER, JUICE DISPENSER – ITEM #82, COFFEE BREWER – ITEM #95 AND CAPPUCCINO DISPENSER – ITEM #99. BACKFLOW PREVENTER REQUIRED ON CONNECTION TO CARBONATOR.								
												84B				F.F.D.			S.U.	EXTEND DRAIN LINES FROM ICE AND SODA DISPENSER AND FROM TWO DRIP TROUGHS IN BEVERAGE COUNTER – ITEM #80								
												84C				F.F.D.			S.U.	EXTEND DRAIN LINES FROM ICE AND SODA DISPENSER AND FROM THREE DRIP TROUGHS IN BEVERAGE COUNTER – ITEM #81								
85	–	NOT USED	–																									
86	–	NOT USED	–																									
87	4	MILK DISPENSERS	C		87A	120	1	2.7	D.R.	48"		–																
88	8	CUP & GLASS RACK DISPENSERS	C																									
89	–	NOT USED	–																									
90	–	NOT USED	–																									
91	3	FLOOR TROUGHS W/ GRATE	A									91A			2"	DIRECT			S.U.	CONNECT TO RECESSED TROUGH IN FLOOR – SEE DETAIL # D4/QF501								
92	3	ICE MAKING MACHINES	A		92A	208	3	13.0	J.B.	76"	CONNECT TO ICE MACHINE, AND FROM ICE MACHINE TO REMOTE CONDENSER ON BUILDING ROOF	92A			2"	F.F.D.			S.U.	EXTEND DRAIN LINES FROM ICE MAKER AND ICE BIN								
												92B		1/2"					60"	CONNECT TO WATER FILTER & FROM WATER FILTER TO ICE MACHINE. BACKFLOW PREVENTER REQUIRED.								
												92C			2"	F.F.D.			S.U.	EXTEND DRAIN LINES FROM TWO ICE MAKERS AND TWO ICE BINS								
93	–	NOT USED	–																									
94	1	BULK CO2 TANK	L																									
95	4	COFFEE BREWERS	A	SATELLITE BREWER W/ (2) 3 GALLON REMOVABLE DISPENSERS	95A	120/208	3	38.3	J.B.	48"	CONNECT TO COFFEE BREWER	–		1/2"					34"	CONNECT C.W. FROM #84A								
96	1	COFFEE URN	A	TWIN 6 GALLON CAPACITY, FIELD FEEDING AREA	96A	120/208	1	36.0	J.B.	48"	CONNECT TO COFFEE URN	96A		1/2"					48"	CONNECT TO COFFEE URN								
97	1	URN STAND	A	FIELD FEEDING AREA								97A			2"	F.F.D.			S.U.	EXTEND DRAIN LINE FROM DRIP TROUGH IN URN STAND								
98	1	BULK JUICE DISPENSER	L	FIELD FEEDING AREA	98A	120	1	10.0	D.R.	24"	VERIFY ELECTRICAL REQUIREMENTS W/ VENDOR FURNISHED EQUIPMENT																	
99	4	CAPPUCCINO DISPENSERS	L		99A	120	1	15.0	D .R.	48"	VERIFY ELECTRICAL REQUIREMENTS W/ VENDOR FURNISHED EQUIPMENT	–		1/2"					34"	CONNECT C.W. FROM #84A								
100	4	ICE CREAM CABINETS	L		100A	120	1	10.0	D.R.	24"	VERIFY ELECTRICAL REQUIREMENTS W/ VENDOR FURNISHED EQUIPMENT																	
101	1	TRAY ACCUMULATOR	A	W/ SCRAPPING TROUGH	101A	208	3	1/2 H.P.	J.B.	24"	CONNECT TO CONTROL PANEL & FROM CONTROL PANEL TO REMOTE CONTROLS BELOW COUNTER TOP AND TO TWO PHOTO ELECTRIC SWITCHES AT WALL OPENING.	101A			2"	F.F.D.				EXTEND DRAIN LINE FROM DRAIN IN COUNTER TOP								
					101B	120	1	15.0	J.B.	48"	PROVIDE SWITCH IN WALL AT 48" A.F.F. AND EXTEND CONDUIT & WIRING IN A CONCEALED MANNER TO THREE FLUORESCENT LIGHTS PROVIDED ON TRAY ACCUMULATOR ABOVE TRAY RETURN OPENING																	
102	3	BRIDGES	A	PORTABLE																								
103	1	BUSSING CONVEYOR	A		103A	208	1	3/4 H.P.	J.B.	4"	CONNECT TO CONVEYOR CONTROL PANEL	103A		1/2"					S.U.	CONNECT TO BELT WASHER ON CONVEYOR								
												103B	1/2"						S.U.	CONNECT TO BELT WASHER ON CONVEYOR								
												103C			2"	12" X 12" F.S.			S.U.	EXTEND DRAIN LINE FROM CONVEYOR								

US Army Corps of Engineers
Norfolk District

MARK	DATE	DESCRIPTION	BY	APP

DESIGNED: JK | CHECKED: JK | DATE: 12/11/09
DRAWN: JK, TJT | SUBMITTED: JK | SCALE: NONE
PROJECT NO. – | NORFOLK DISTRICT FILE NO. –
DRAWING NO. QF606 | SPECIFICATION NO. –
Last revised 12-11-09 | Plot scale: 1:1
File name: QF606.DWG

NORFOLK DISTRICT
CORPS OF ENGINEERS
NORFOLK, VIRGINIA

NAO
CENTER OF STANDARDIZATION

US ARMY STANDARD DESIGN
1300 TRAINEE DINING FACILITY

FOOD SERVICE EQUIPMENT SCHEDULES

SHEET REFERENCE NUMBER
QF606
SHEET OF

ITEM NUMBER	QTY.	DESCRIPTION	EQUIP. CLASS	COMMENTS	ELECTRICAL SCHEDULE: ELEC. SYMBOL	VOLTS	PHASE	AMPS	CONN.	HT. A.F.F.	REMARKS	PLUMBING SCHEDULE: PLUMBING SYMBOL	H.W.	C.W.	WASTE SIZE	WASTE TYPE	GAS	GAS MBTU	HT. A.F.F.	REMARKS	VENTILATION SCHEDULE: VENTILATION SYMBOL	QTY.	EXHAUST COLLAR	EXHAUST CFM	SUPPLY COLLAR	SUPPLY CFM	STATIC PRESSURE	HT. A.F.F.
104	1	DISHWASHING MACHINE	A		104A	480	3	47.0	J.B.	4"	CONNECT TO BOOSTER HEATER CIRCUIT BREAKER PANEL BELOW DISHWASHER	104A			2"	F.F.D.			S.U.	EXTEND DRAIN LINE FROM BOOSTER HEATER TEMPERATURE/PRESSURE RELIEF VALVE ON DISHWASHER								
					104B	480	3	91.5	J.B.	–	J.B. AT CEILING – CONNECT TO CIRCUIT BREAKER PANEL ON TOP OF DISHWASHER	104B	1"						S.U.	140 DEG. MIN. – CONNECT TO COMMON H.W. CONNECTION ON DISHWASHER. 168 G.P.H. AT 20 P.S.I. FLOW PRESSURE REQUIRED								
												104C		1"					S.U.	CONNECT TO PRE-WASH TEMPERATURE CONTROL CONNECTION ON DISHWASHER								
												104D			3"	12" X 12" F.S.			S.U.	EXTEND DRAIN LINEFROM DISHWASHER								
105	2	PULP CONTAINERS	C																									
106	6	DOLLIES	C	FOR CUP AND GLASS RACKS																								
107	1	VENT DUCT EXTENSION	A																		107A	1	16" DIA	750				6" ABOVE CEILING
108	3	SOAK SINKS	C									108A			2"	F.D.												
109	3	SERVICE SINKS (FLOOR MOUNTED)	A									109A		1/2"					36"	CONNECT TO FAUCET, INLETS 8" O.C.								
												109B			3"	DIRECT			S.U.	CONNECT TO SINK								
												109C	1/2"						36"	CONNECT TO FAUCET, INLETS 8" O.C.								
110	–	NOT USED	–																									
111	–	NOT USED	–																									
112	–	NOT USED	–																									
113	1	CLEAN/SANITIZING MACHINE	C		113A	120	1	15.0	D.R.	18"	LOCATED NEAR FAUCET HOSE STATIONS – ITEM #9 AND SERVICE SINKS – ITEM #109 (3 PLACES)																	
114	4	DISH CARTS	C																									
115	–	NOT USED	–																									
116	1	WALL MOUNTED FLAT SHELF	A																									
117	10	TRAY DISPENSERS	C																									
118	8	BREAD RACKS	L																									
119	1	PROOFING CABINET	C		119A	120	1	16.6	J.B.	–	PROVIDE J.B. ABOVE CEILING & PENDANT CORD WITH D.R. AT 78" A.F.F.																	
120	6	SYRUP BOX RACKS	L		120A	120	1	10.0	D.R.	24"	CONVENIENCE RECEPTACLE																	
121	–	NOT USED	–																									
122	4	OPEN RACKS	C																									
123	3	HEATED CABINETS, MOBILE	A		123A	120	1	16.0	J.B.	–	PROVIDE J.B. ABOVE CEILING & PENDANT CORD WITH D.R. AT 78" A.F.F. – NEMA #5-20P PLUG FURNISHED ON EQUIPMENT																	
					123B	120	1	16.0	D.R.	24"	NEMA #5-20P PLUG FURNISHED ON EQUIPMENT																	
124	5	UTILITY CARTS	C																									
125	1	COOK & HOLD CABINET	A		125A	208	1	28.8	J.B.	–	PROVIDE J.B. ABOVE CEILING & PENDANT CORD WITH S.R. AT 78" A.F.F. CORD AND PLUG FURNISHED AND INSTALLED ON CABINET UNDER ELECT. SEC.																	
126	1	PREP SINK	A		126A	120	1	15.0	J.B.	–	PROVIDE J.B. ABOVE CEILING & PENDANT CORD WITH CONVENIENCE D.R. AT 78" A.F.F.	126A	1/2"						S.U.	CONNECT TO FAUCET								
												126B		1/2"					S.U.	CONNECT TO FAUCET								
												126C			3"	12" X 12" F.S.			S.U.	EXTEND DRAIN LINES FROM TWO SINKS								
127	2	REFRIGERATORS	A	ONE SECTION REACH-IN	127A	120	1	8.0	D.R.	86"																		
128 TO 151 NOT USED																												
152	1	WASTE COOKING OIL STORAGE TANK	A		152A	120	1	20.0	D.R.	18"		152A							42"	PLUMB. SEC. TO FURNISH AND INSTALL 3/4" BLACK IRON OR GALVANIZED PIPING (NOT COPPER) FROM WASTE COOKING OIL STORAGE TANK TO REMOTE QUICK CONNECT FITTING – SEE DETAIL #A1/QF504.								
153	1	WASTE COOKING OIL CADDY	A																									
154	1	WORK TABLE	A		154A	120	1	10.0	D.R.	48"	CONVENIENCE RECEPTACLE	154A		1/2"					18"	CONNECT TO FAUCET								
												154B			2"	12"X12" F.S.			S.U.	EXTEND DRAIN LINE FROM SINK								
												154C	1/2"						18"	CONNECT TO FAUCET								
155	1	CAN CRUSHER	A		155A	120	1	20.0	D.R.	48"																		
156	4	RECYCLING BINS	C																									

US Army Corps of Engineers
Norfolk District

MARK	DATE	DESCRIPTION	BY	APP

DESIGNED: JK
DRAWN: JK,TJT
PROJECT NO. –
CHECKED: JK
SUBMITTED: JK
DATE: 12/11/09
SCALE: NONE
NORFOLK DISTRICT FILE NO. –
SPECIFICATION NO. –
DRAWING NO. QF607
Last saved on 12-11-09
File name: QF607.DWG
Plot scale: 1:1

NORFOLK DISTRICT
CORPS OF ENGINEERS
NORFOLK, VIRGINIA

NAO
CENTER OF STANDARDIZATION

US ARMY STANDARD DESIGN
1300 TRAINEE DINING FACILITY

FOOD SERVICE EQUIPMENT SCHEDULES

SHEET REFERENCE NUMBER
QF607
SHEET OF