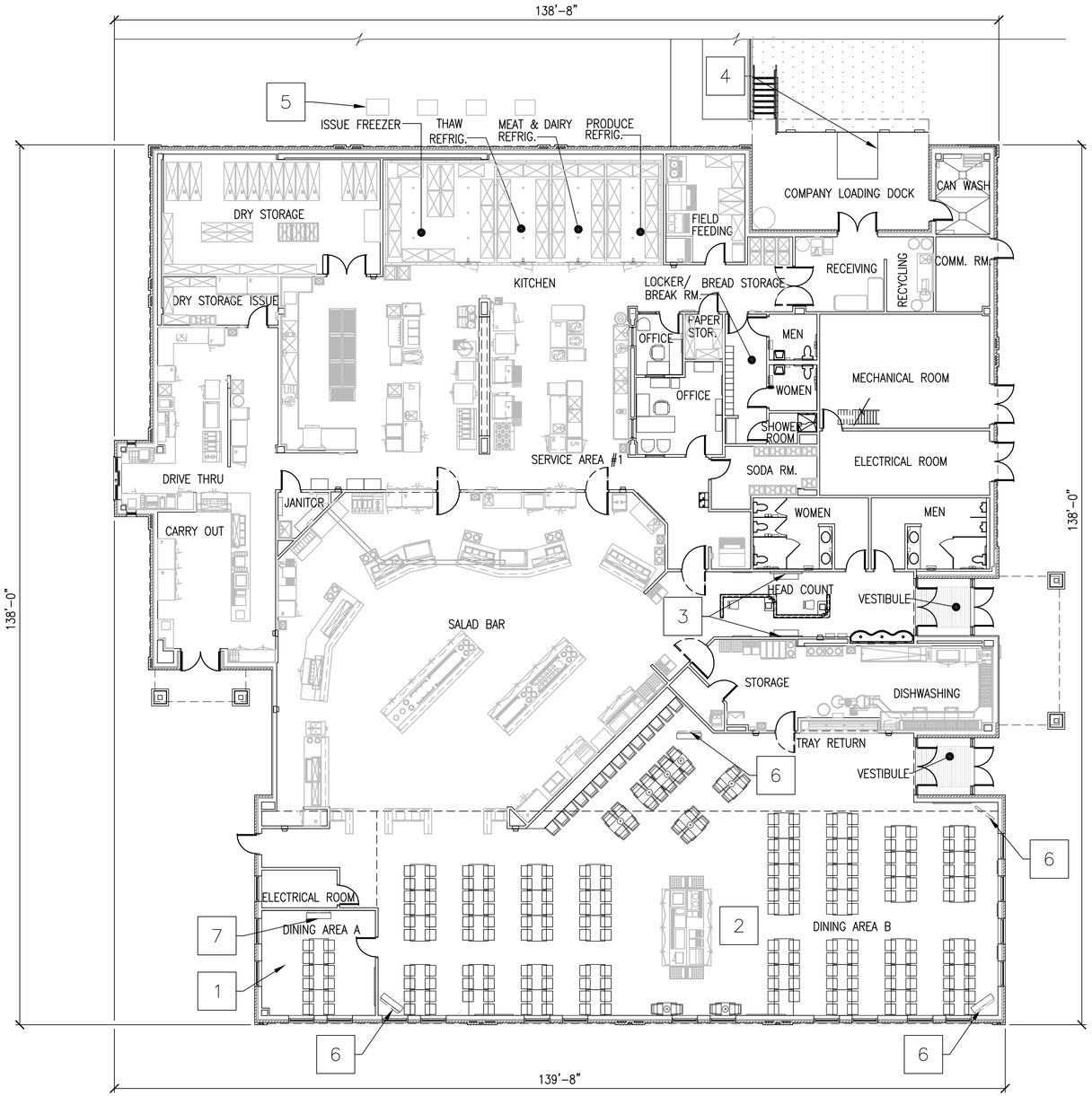


PLAN NORTH

## OVERALL FLOOR PLAN

3/32" = 1'-0"

## GRAPHIC SCALE(S)

3/32" = 1'-0" 0 5' 10' 20' 40'

## GENERAL NOTES

1. FLOOR PLAN INDICATES THE PREFERRED SOLUTION IN SCHEMATIC FORM ONLY. PROPOSER IS ALLOWED TO MAKE ADJUSTMENTS FOR EXTERIOR FACADE/ARCHITECTURAL THEME AND/OR TO ACCOMODATE SPECIFIC BUILDING ENGINEERING SYSTEMS (STRUCTURAL, MECHANICAL, FIRE PROTECTION ETC.). THESE ADJUSTMENTS, AS WELL AS ANY FUNCTIONAL DEVIATIONS PROPOSED, WILL BE EVALUATED BY THE CENTER OF STANDARDIZATION FOR THIS FACILITY DURING THE SOURCE SELECTION EVALUATION BOARD.

2. AREAS SHOWN ON THE NET AREA COMPUTATION ARE TO BE CONSIDERED NET PROGRAM REQUIREMENTS. THE MAXIMUM GROSS SQUARE FOOTAGE ALLOWABLE FOR THIS CONTRACT IS IDENTIFIED IN SECTION 01 10 00 PARAGRAPH 2 OF THE RFP. A REDUCED OVERALL GROSS AREA IS ACCEPTALE IF ALL NET PROGRAM REQUIREMENTS AND ADJACENCIES ARE MET.

## NOTES

1. DINING AREA 'A', 3 TABLES = 12 SEATS
2. DINING AREA 'B', 55 TABLES = 222 SEATS
3. FLAT PANEL TV MENU BOARD.
4. DOCK LEVELER.
5. FREEZER AND REFRIGERATION UNITS (MAY BE PLACED ON ROOF OR, AS AN ALTERNATIVE, IN UNOBSTRUCTED SPACE ONLY WHEN APPROVED BY THE INSTALLATION). THE LOCATION OF THE UNITS MAY VARY. SITE ADAPT AE TO COORDINATE LOCATION PER ATFP, CIVIL, AND FOOD SERVICE REQUIREMENTS.
6. CEILING MOUNTED FLAT PANEL TELEVISION.
7. WALL MOUNTED FLAT PANEL TELEVISION.

## NET AREA COMPUTATIONS

| SPACE | 201–500 PERSON |
|---|---|
| | FT² |
| KITCHEN | 2,275 |
| DINING (AREAS A & B) | 4,187 |
| SERVING | 2,982 |
| DISHWASHING | 599 |
| RECEIVING VESTIBULE | 180 |
| | |
| PUBLIC TOILETS | 414 |
| STAFF TOILETS/ LOCKERS | 287 |
| JANITOR | 43 |
| VESTIBULE (2) | 166 |
| QUEUEING | 330 |
| | |
| OFFICES (2) | 232 |
| | |
| REF./FREEZER | 799 |
| FIELD FEEDING | 251 |
| DRY STORAGE | 625 |
| BREAD STORAGE | 82 |
| NON FOOD STORAGE (2) | 96 |
| SODA ROOM | 137 |
| | |
| CARRY–OUT PREPARATION | 556 |
| CARRY–OUT SERVING | 445 |
| CARRY–OUT STORAGE | 137 |
| | |
| CAN WASH | 103 |
| MECHANICAL | 476 |
| ELECTRICAL (2) | 339 |
| COMM | 98 |
| TOTAL NET AREA | 15,839 |

## GROSS AREA COMPUTATIONS

| SPACE | 251–500 PERSON |
|---|---|
| | FT² |
| | |
| BUILDING | 17,061 |
| | |
| LOADING DOCK | 212 |
| | |
| CANOPIES | 228 |
| | |
| | |
| TOTAL | 17,501 |

NOTE:

SQUARE FOOTAGE CALCULATED IAW UFC 3–100–10 PARA 2–15.3

US Army Corps of Engineers
Norfolk District

| SYMBOL | DATE | DESCRIPTION | BY | APP |
|---|---|---|---|---|

DESIGNED: JH
DRAWN: SS
PROJECT NO. –
CHECKED: RTB
SUBMITTED: JH
DATE: 12/11/09
SCALE: AS NOTED
NORFOLK DISTRICT FILE NO. –
SPECIFICATION NO. –
DRAWING NO. AE101
Last worked on: 12/11/09
File name: AE101.DWG
Plot scale: 1:1

NORFOLK DISRTICT
CORPS OF ENGINEERS
NORFOLK, VIRGINIA

NAO CENTER OF STANDARDIZATION

US ARMY STANDARD DESIGN
500 SOLDIER PERMANENT PARTY DINING FACILITY

OVERALL FLOOR PLAN

SHEET REFERENCE NUMBER
AE101
SHEET OF

H:\PJ\3285\CAD-Stripdown-DFAC\CAD-500SPP\Sheets\A\AE101.dwg Fri, 18 Dec 2009 - 2:48pm ssurendhranath

## WALK-IN NOTES

1. SEE DETAIL #B1/QF501 FOR INSULATED FLOOR DETAIL.
2. CENTER LINE OF BREAKER STRIP IN FLOOR.
3. RUN DRAIN LINE EXPOSED IN FREEZER AND REFRIGERATORS, BEHIND SHELVING, AND EXTEND DOWN INTO FUNNEL OF FLOOR DRAIN. PROVIDE "P" TRAP OUTSIDE WALK-IN COMPARTMENT.
4. PROVIDE SLEEVES FOR DRAIN LINE IN WALLS OF WALK-IN AND IN BUILDING WALL AT CORRECT HEIGHT FOR PROPER DRAINAGE. CAULK ALL SLEEVES.
5. ALL ELECTRICAL CONNECTIONS FOR WALK-INS INCLUDING WIRING TO ALL EVAPORATORS, VAPOR-PROOF LIGHTS, DOOR HEATERS, THRESHOLD HEATERS, TIME CLOCKS, HEATED PRESSURE RELIEF PORT, WIRING FROM FREEZER EVAPORATOR TO ROOM THERMOSTAT, AND ALL CONTROLS TO BE PROVIDED.
6. FREEZER EVAPORATOR SHALL BE ELECTRICALLY CONNECTED TO ITS RESPECTIVE CONDENSING UNIT AS REQUIRED. PROVIDE WIRING FROM THE TIME CLOCK ON FREEZER CONDENSING UNIT TO THE ELECTRIC DEFROST HEATERS IN THE EVAPORATOR. ELECTRICAL INTERCONNECTIONS BETWEEN THE REFRIGERATOR EVAPORATORS AND THEIR RESPECTIVE CONDENSING UNITS IS NOT REQUIRED.
7. REMOTE AIR COOLED REFRIGERATOR AND FREEZER CONDENSING UNITS (ITEMS #6 & #7) SHALL BE MOUNTED ON METAL RACKS AND FACTORY WIRED. UNITS SHALL BE LOCATED OUTDOORS ON CONCRETE PAD AS SHOWN ON PLAN. LOCATION OF CONDENSING UNITS MAY VARY DEPENDING ON SITE-ADAPT CONSIDERATIONS.

   (3) REFRIGERATOR CONDENSING UNITS SHALL BE WIRED 208-60-3 WITH AN APPROX. TOTAL LOAD OF 5.8 AMPS. EACH, NOT INCLUDING EVAPORATOR.

   FREEZER CONDENSING UNIT SHALL BE WIRED 208-60-3 WITH AN APPROX. TOTAL LOAD OF 24.5 AMPS., INCLUDING EVAPORATOR. A SEPARATE 208-60-1 PHASE LINE SHALL BE RUN FROM THE CONTROL PANEL ON THE CONDENSING UNIT TO THE EVAPORATOR IN THE WALK-IN TO HANDLE AN 11.7 AMP. LOAD FOR THE ELECTRIC DEFROST HEATERS.
8. OVERALL HEIGHT OF WALK-IN SHALL BE APPROX. 9'-5" A.F.F.
9. K.E.C. SHALL PROVIDE METAL TRIM STRIPS TO MATCH WALK-IN FACING WHERE WALK-IN ABUTS BUILDING WALLS, AND CLOSURE PANELS FROM TOP OF WALK-IN TO FINISHED CEILING.
10. FINISHED FLOOR TO BE LEVEL PLUS OR MINUS 1/8".
11. ALL ELECTRIC CONDUIT SHALL BE RUN ON TOP (EXTERIOR) OF WALK-IN AND SHALL HAVE VAPOR SEALS ON INTERIOR AND EXTERIOR OF CONDUIT.

## ICE MAKING MACHINE REMOTE CONDENSER NOTES

1. TWO REMOTE CONDENSERS FOR ICE MAKING MACHINES - ITEM #92 SHALL BE INSTALLED ON BUILDING ROOF AS CLOSE AS POSSIBLE ABOVE ICE MAKING MACHINE LOCATIONS. EACH CONDENSER MEASURES APPROX. 28" X 30" X 30" HIGH AND WEIGHS APPROX. 95 LBS.
2. EACH CONDENSER SHALL BE ELECTRICALLY CONNECTED TO ITS RESPECTIVE ICE MACHINE. SEPARATE ELECTRICAL ROUGH-INS FOR THE CONDENSERS ARE NOT REQUIRED.
3. REFRIGERATION LINES FOR EACH CONDENSER FURNISHED AND INSTALLED WITH ICE MAKING MACHINES.

## SODA SYSYEM NOTES

1. TWO 6" DIA. PVC CONDUITS STUBBED UP OUT OF FLOOR 4" A.F.F. SYRUP AND CO2 LINES AND BAG-N-BOX JUICE LINES EXTENDED DOWN INTO CONDUIT BY VENDOR(S).
2. PROVIDE TWO 6" DIA. PVC CONDUITS BELOW FLOOR FOR SYRUP AND CO2 LINES AND BAG-N-BOX JUICE LINES . ALL TURNS TO BE SMOOTH SWEEPS WITH 30" MIN. RADIUS. SYRUP AND CO2 LINES AND BAG-N-BOX JUICE LINES EXTENDED THROUGH CONDUITS BY VENDOR(S).
3. 6" DIA. PVC CONDUIT STUBBED UP OUT OF FLOOR 4" A.F.F. SYRUP AND CO2 LINES AND BAG-N-BOX JUICE LINES EXTENDED UP OUT OF CONDUIT AND CONNECTED TO DISPENSING EQUIPMENT BY VENDOR(S).
4. TWO 2" DIA. PVC CONDUITS STUBBED UP OUT OF FLOOR 4" A.F.F. FOR CO2 LINES FROM BULK CO2 TANK. CO2 LINES EXTENDED DOWN INTO CONDUITS BY VENDOR.
5. PROVIDE TWO 2" DIA. PVC CONDUITS BELOW FLOOR FOR CO2 LINES FROM BULK CO2 TANK. ALL TURNS TO BE SMOOTH SWEEPS WITH 24" MIN. RADIUS. CO2 LINES EXTENDED THROUGH CONDUITS BY VENDOR.
6. 2" DIA. PVC CONDUIT STUBBED UP OUT OF FLOOR 4" A.F.F. CO2 LINES FROM BULK CO2 TANK TO BE EXTENDED UP OUT OF CONDUIT AND CONNECTED TO DISPENSING EQUIPMENT BY VENDOR(S)

## GENERAL NOTES

1. ALL WORK SHALL BE DONE IN ACCORDANCE WITH APPLICABLE CODES.
2. ALL DIMENSIONS ARE FROM THE FINISHED SURFACE OF WALLS, FLOORS OR CEILINGS.
3. ALL DIMENSIONS INDICATED FOR ROUGH-INS SHALL BE TO THE CENTER OF THE ROUGH-IN.
4. UTILITY REQUIREMENTS SHOWN ON DRAWINGS ARE FOR THE FOOD SERVICE EQUIPMENT ONLY.
5. IN-WALL BACKING SHALL BE PROVIDED FOR ALL WALL MOUNTED FOOD SERVICE EQUIPMENT AS REQUIRED. COORDINATE FOR TYPES, SIZES AND LOCATIONS OF BACKING.

## ELECTRICAL NOTES

1. ELECTRICAL ROUGH-INS AND FINAL CONNECTIONS TO EQUIPMENT SHALL BE UNDER ELECT. SEC. MATERIALS FOR EQUIPMENT CONNECTIONS SHALL BE FURNISHED AND INSTALLED UNDER ELECT. SEC. EXCEPT AS NOTED ON DRAWINGS.
2. ELECTRICAL DISCONNECTS ARE NOT FURNISHED WITH EQUIPMENT. THEY SHALL BE FURNISHED AND INSTALLED WHERE REQUIRED UNDER ELECT. SEC. COORDINATE WITH EQUIPMENT ON PROPER LOCATIONS.
3. ALL CONDUIT SHALL BE CONCEALED IN WALLS, FLOOR OR CEILING EXCEPT ONLY WHERE ABSOLUTELY NECESSARY.
4. ALL CONDUIT AND ELECTRICAL CORDS SHALL BE LOCATED UP OFF THE FLOOR TO FACILITATE FLOOR CLEANING AND SHALL BE SUPPORTED FROM ABOVE. FLOOR MOUNTED SUPPORTS SHALL NOT BE USED.
5. RECEPTACLES OF THE PROPER CONFIGURATION TO ACCOMMODATE THE PLUGS FURNISHED ON THE EQUIPMENT SHALL BE FURNISHED AND INSTALLED UNDER ELECT. SEC.

## PLUMBING NOTES

1. PLUMBING ROUGH-INS UNDER PLUMB. SEC. INCLUDING FLOOR DRAINS, FLOOR SINKS, AND GREASE INTERCEPTORS.
2. FINAL CONNECTIONS TO EQUIPMENT UNDER PLUMB. SEC.. COORDINATE WITH THE EQUIPMENT INSTALLER ON CONNECTIONS TO EQUIPMENT.
3. MATERIALS FOR EQUIPMENT CONNECTIONS INCLUDING PIPING, FITTINGS, STOPS, TRAPS, BACKFLOW PREVENTION DEVICES AND PRESSURE REGULATORS FURNISHED AND INSTALLED UNDER PLUMB. SEC. EXCEPT AS NOTED ON DRAWINGS.
4. ALL PIPING SHALL BE CONCEALED IN WALLS, FLOOR OR CEILING EXCEPT ONLY WHERE ABSOLUTELY NECESSARY.
5. ALL PIPING SHALL BE LOCATED UP OFF THE FLOOR TO FACILITATE FLOOR CLEANING AND SHALL BE SUPPORTED FROM ABOVE. FLOOR MOUNTED SUPPORTS SHALL NOT BE USED.
6. WATER FILTERS OR SOFTENERS NOT FURNISHED WITH EQUIPMENT EXCEPT AS NOTED ON DRAWINGS.
7. GAS PRESSURE REGULATORS SHALL BE FURNISHED WITH THE EQUIPMENT AND INSTALLED UNDER PLUMB. SEC..
8. SINKS: FAUCETS AND DRAIN FITTINGS FURNISHED WITH THE EQUIPMENT AND INSTALLED UNDER PLUMB. SEC.
9. DISPOSERS: SOLENOID VALVE, ATMOSPHERIC VACUUM BREAKER, AND WATER INLET FURNISHED WITH THE EQUIPMENT AND INSTALLED UNDER PLUMB. SEC.
10. BOOSTER HEATERS: PRESSURE REDUCING VALVE, TEMPERATURE/ PRESSURE RELIEF VALVE, TWO TEMPERATURE/PRESSURE GAUGES AND SHOCK ABSORBER FURNISHED WITH THE EQUIPMENT AND INSTALLED UNDER PLUMB. SEC.
11. 180 DEGREE WATER LINE FROM BOOSTER HEATER TO DISHWASHER SHALL BE INSULATED UNDER PLUMB. SEC.

## VENTILATION NOTES

1. EXHAUST HOOD FURNISHED AND INSTALLED BY EQUIPMENT INSTALLER. DUCTWORK AND ROOF TOP EQUIPMENT FURNISHED AND INSTALLED UNDER MECH. SEC.
2. CONTROLS OR SWITCHES FOR EXHAUST FANS OR MAKE-UP AIR UNITS SHALL BE FURNISHED WITH THE HVAC EQUIPMENT. CONTROLS OR SWITCHES SHALL BE RECESSED IN THE BUILDING WALL, NOT ON THE EXHAUST HOOD.
3. FIRE SUPPRESSION SYSTEM FURNISHED AND INSTALLED WITH THE EXHAUST HOOD. CONNECTIONS TO FIRE SUPPRESSION SYSTEM FURNISHED AND INSTALLED UNDER ELECT. SEC.

## EQUIPMENT CLASSES

A - CONTRACTOR FURNISHED, CONTRACTOR INSTALLED FROM CONSTRUCTION FUNDS.

C - GOVERNMENT FURNISHED, GOVERNMENT INSTALLED. FUNDS OTHER THAN CONSTRUCTION.

L - FURNISHED BY VENDOR

## LEGEND

| | |
|---|---|
| ⬡ | EQUIPMENT ITEM |
| ⬭ | PLUMBING REQUIREMENT |
| ▭ | ELECTRICAL REQUIREMENT |
| ▨ | VENTILATION REQUIREMENT |
| ▽ | WALK-IN NOTE |
| ◇ | SODA SYSTEM NOTE |
| A. | AMPERES |
| A.F.F. | ABOVE FINISHED FLOOR |
| C.W. | COLD WATER |
| D.R. | DUPLEX RECEPTACLE |
| E.C. | EQUIPMENT CONNECTION |
| F.D. | FLOOR DRAIN |
| F.F.D. | FLOOR DRAIN WITH FUNNEL |
| F.R. | FOUR-PLEX RECEPTACLE |
| F.S. | FLOOR SINK |
| H.P. | HORSE POWER |
| H.W. | HOT WATER |
| J.B. | JUNCTION BOX |
| K.W. | KILOWATT |
| P.W. | PRE-WIRED |
| S.O. | STUB OUT |
| S.R. | SPECIAL RECEPTACLE |
| S.U. | STUB UP |

US Army Corps of Engineers
Norfolk District

| MARK | DATE | DESCRIPTION | BY | APP |
|---|---|---|---|---|

DESIGNED: JK | CHECKED: JK | DATE: 12/11/2009
DRAWN: JK,TJT | SUBMITTED: JK | SCALE: NONE
PROJECT NO. — | NORFOLK DISTRICT FILE NO. —
DRAWING NO. QF001 | SPECIFICATION NO. —
Last saved: 12:47 pm 12-11-09 | Plot scale: 1:1
File name: QF001.DWG

NORFOLK DISRTICT
CORPS OF ENGINEERS
NORFOLK, VIRGINIA

NAO CENTER OF STANDARDIZATION

US ARMY STANDARD DESIGN
500 SOLDIER PERMANENT PARTY DINING FACILITY

GENERAL NOTES AND LEGEND

SHEET REFERENCE NUMBER
QF001
SHEET OF

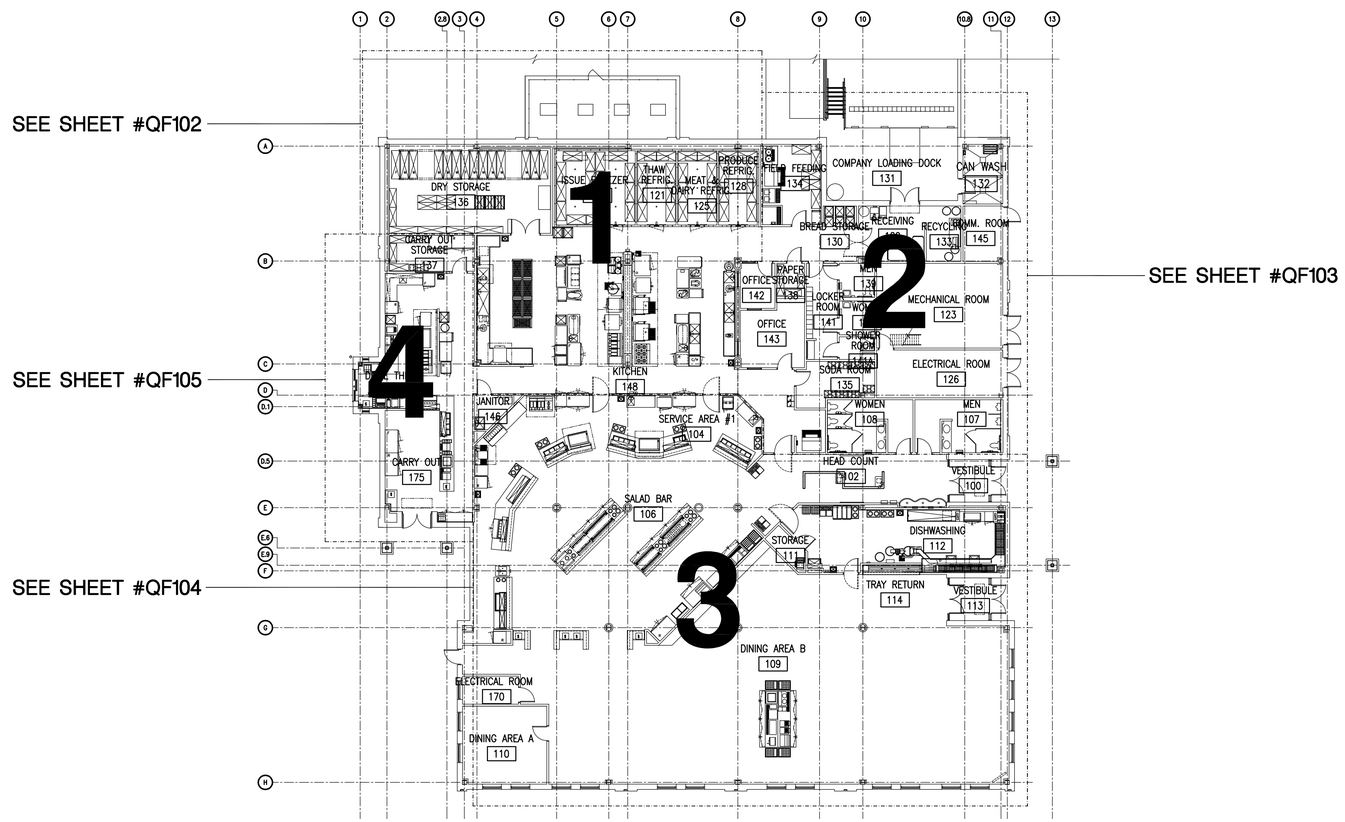


**OVERALL FOOD SERVICE PLAN**
**SCALE : 1/16"=1'-0"**

US Army Corps of Engineers
Norfolk District

| MARKS | DATE | DESCRIPTION | BY | APP |
|---|---|---|---|---|

DESIGNED: JK
DRAWN: JK,TJT
PROJECT NO.: —
CHECKED: JK
SUBMITTED: JK
DATE: 12/11/2009
SCALE: AS NOTED
NORFOLK DISTRICT FILE NO.: —
SPECIFICATION NO.: —
DRAWING NO.: QF101
Last saved: 12-11-09
File name: QF101.DWG
Plot scale: 1:1

NORFOLK DISRTICT
CORPS OF ENGINEERS
NORFOLK, VIRGINIA

NAO
CENTER OF
STANDARDIZATION

US ARMY STANDARD DESIGN
500 SOLDIER PERMANENT PARTY
DINING FACILITY

OVERALL FOOD SERVICE PLAN

SHEET REFERENCE NUMBER
QF101
SHEET OF

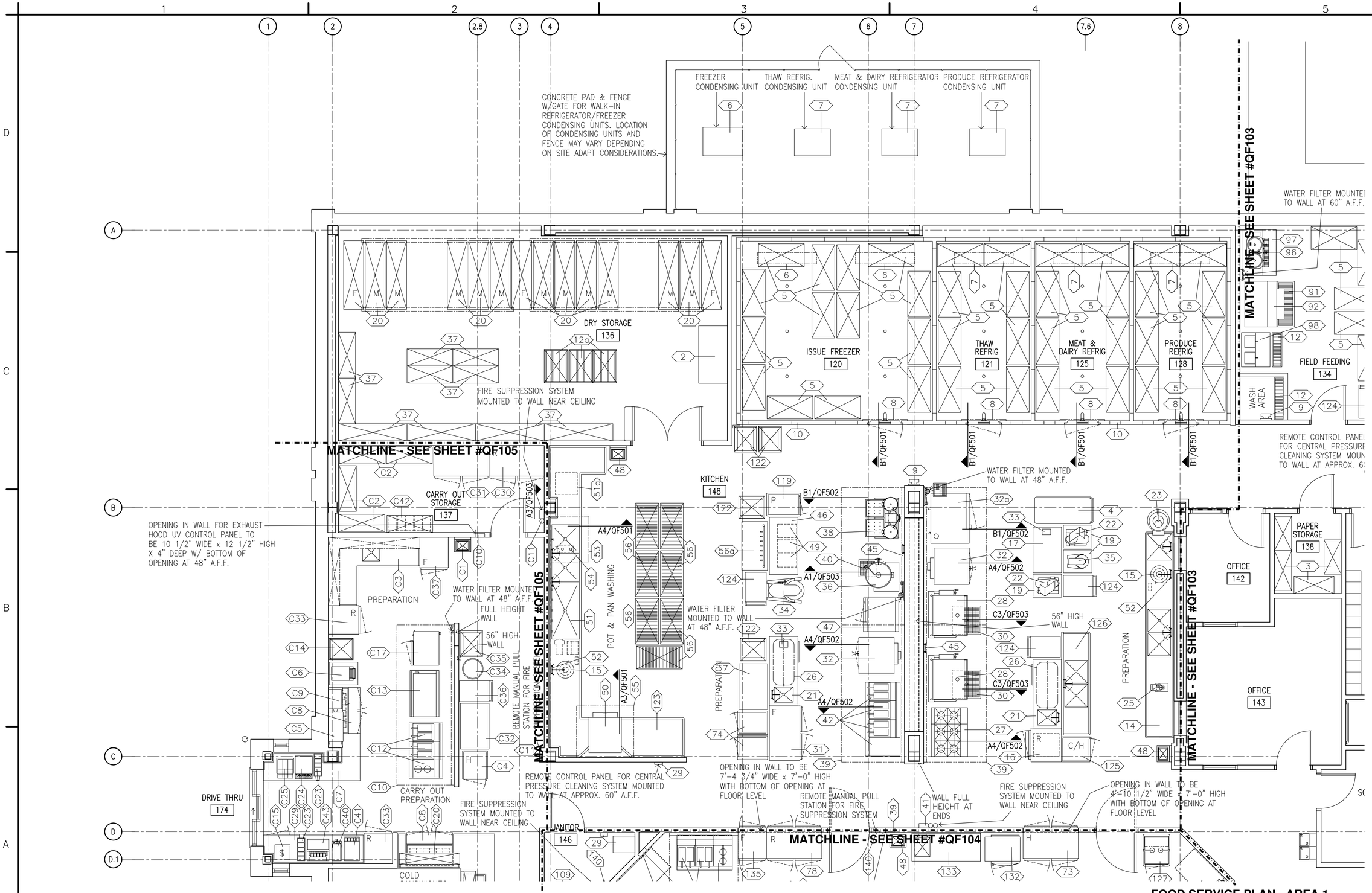


## FOOD SERVICE PLAN - AREA 1

SCALE : 1/4"=1'-0"

US Army Corps of Engineers
Norfolk District

| MARK | DATE | DESCRIPTION | BY | APP |
|---|---|---|---|---|

DESIGNED: JK
DRAWN: JK,TJT
CHECKED: JK
SUBMITTED: JK
DATE: 12/11/2009
SCALE: AS NOTED
NORFOLK DISTRICT FILE NO. —
SPECIFICATION NO. —
PROJECT NO. —
DRAWING NO. QF102
Last saved: 12-11-09
Plot scale: 1:1
File name: QF102.DWG

NORFOLK DISRTICT
CORPS OF ENGINEERS
NORFOLK, VIRGINIA

NAO CENTER OF STANDARDIZATION

US ARMY STANDARD DESIGN
500 SOLDIER PERMANENT PARTY DINING FACILITY

FOOD SERVICE PLAN - AREA 1

SHEET REFERENCE NUMBER
QF102
SHEET OF

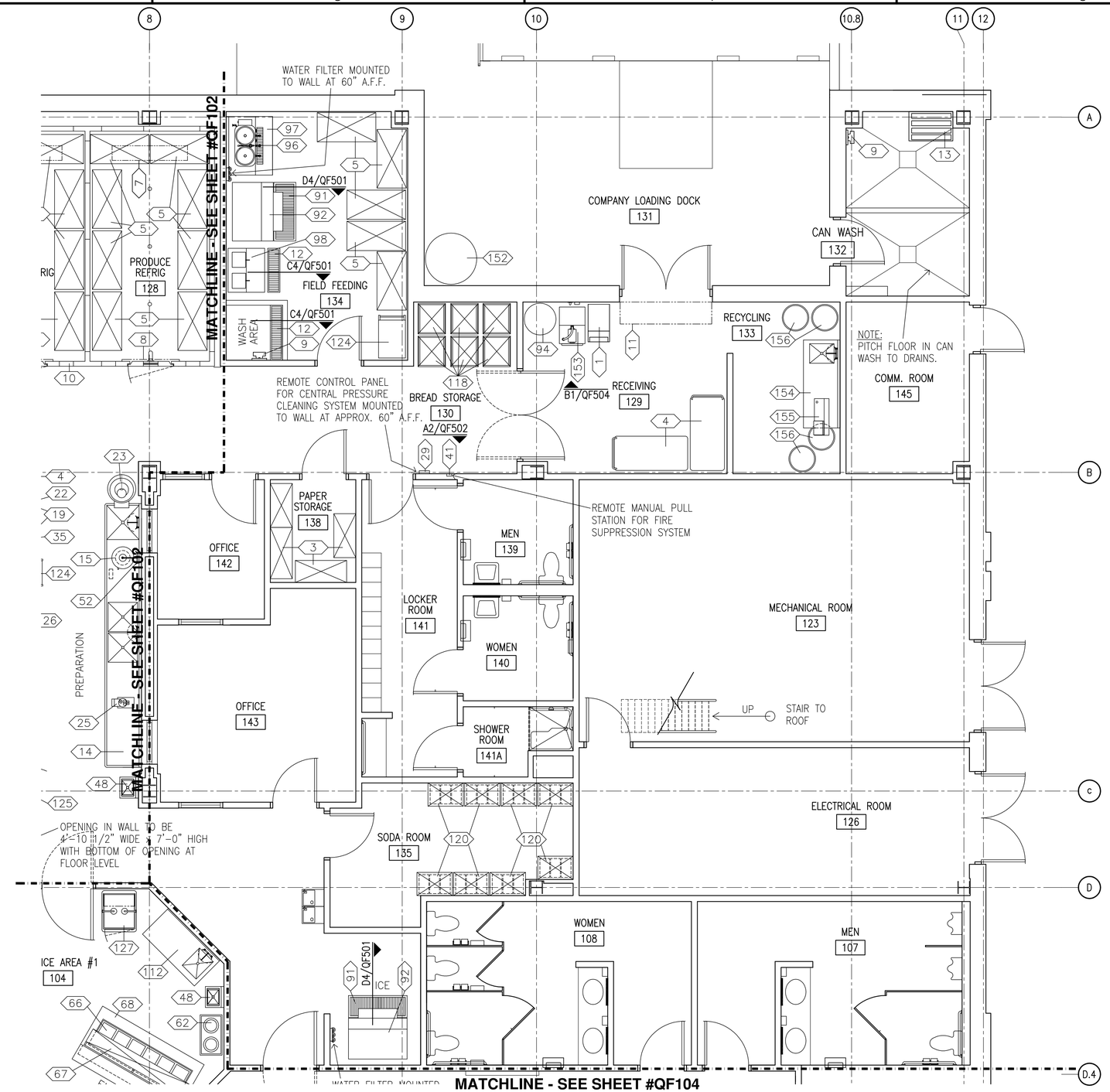


## FOOD SERVICE PLAN - AREA 2

SCALE : 1/4"=1'-0"

US Army Corps of Engineers
Norfolk District

| MARK | DATE | DESCRIPTION | BY | APP |
|---|---|---|---|---|

DESIGNED: JK
DRAWN: JK, TJT
PROJECT NO. —
CHECKED: JK
SUBMITTED: JK
DATE: 12/11/2009
SCALE: AS NOTED
NORFOLK DISTRICT FILE NO. —
SPECIFICATION NO. —
DRAWING NO. QF103
Last saved: 12-11-09
File name: QF103.DWG
Plot scale: 1:1

NORFOLK DISRTICT
CORPS OF ENGINEERS
NORFOLK, VIRGINIA

NAO CENTER OF STANDARDIZATION

US ARMY STANDARD DESIGN
500 SOLDIER PERMANENT PARTY DINING FACILITY

FOOD SERVICE PLAN - AREA 2

SHEET REFERENCE NUMBER
QF103
SHEET OF

REMOTE CONTROL PANEL FOR CENTRAL PRESSURE CLEANING SYSTEM MOUNTED TO WALL AT APPROX. 60" A.F.F.

OPENING IN WALL TO BE 7'-4 3/4" WIDE x 7'-0" HIGH WITH BOTTOM OF OPENING AT FLOOR LEVEL

REMOTE MANUAL PULL STATION FOR FIRE SUPPRESSION SYSTEM MOUNTED TO WALL NEAR CEILING

WALL FULL HEIGHT AT

FIRE SUPPRESSION SYSTEM MOUNTED TO WALL NEAR CEILING

OPENING IN WALL TO BE 4'-10 1/2" WIDE x 7'-0" HIGH WITH BOTTOM OF OPENING AT FLOOR LEVEL

MATCHLINE - SEE SHEET #QF102

MATCHLINE - SEE SHEET #QF105

MATCHLINE - SEE SHEET #QF103

JANITOR 146

SODA ROOM 135

ELECTRICAL ROOM 126

WOMEN 108

MEN 107

SERVICE AREA #1 104

ICE

WATER FILTER MOUNTED TO WALL AT 60" A.F.F.

HEAD COUNT 102

VESTIBULE 100

GRILL

GRILL/ACTION STATION

ENTREES

OPENINGS IN WALLS FOR EXHAUST HOOD UV CONTROL PANELS TO BE 10 1/2" WIDE x 12 1/2" HIGH X 4" DEEP W/ BOTTOM OF OPENINGS AT 48" A.F.F.

PIZZA

DELI

SALAD BAR 106

COLD BAR

HOT BAR

SOUP

SALADS

BEVERAGES

BREAD

REFRIG.

ICE CREAM

DESSERTS

CASHIERS

REMOTE CONTROL PANEL FOR CENTRAL PRESSURE CLEANING SYSTEM MOUNTED TO WALL AT APPROX. 60" A.F.F.

HAND WASHING

CART PARKING

STORAGE 111

JANITOR

DISHWASHING 112

TRAY RETURN

TRAY RETURN 114

SEE DETAIL #B4/QF504

SILL HEIGHT TO BE 3'-0" A.F.F.

OPENING IN WALL TO BE 19 1/2" WIDE x 15" HIGH WITH SILL AT 2'-8" A.F.F. - S/S FRAME & SLIDE-UP DOOR FURNISHED W/ EQUIP.

VESTIBULE 113

DINING AREA B 109

ELECTRICAL ROOM 170

DINING AREA A 110

BEVERAGES

A1/QF501

## FOOD SERVICE PLAN - AREA 3

SCALE : 1/4"=1'-0"

US Army Corps of Engineers
Norfolk District

| MARK | DATE | DESCRIPTION | BY | APP |
|---|---|---|---|---|

DATE: 12/11/2009
SCALE: AS NOTED
NORFOLK DISTRICT FILE NO. —
SPECIFICATION NO. —
Plot scale: 1:1

DESIGNED: JK
DRAWN: JK, TJT
PROJECT NO. —
CHECKED: JK
SUBMITTED: JK
DRAWING NO. QF104
Last revised: 12-11-09
File name: QF104.DWG

NORFOLK DISRTICT
CORPS OF ENGINEERS
NORFOLK, VIRGINIA

NAO CENTER OF STANDARDIZATION

US ARMY STANDARD DESIGN
500 SOLDIER PERMANENT PARTY DINING FACILITY

FOOD SERVICE PLAN - AREA 3

SHEET REFERENCE NUMBER
QF104
SHEET OF

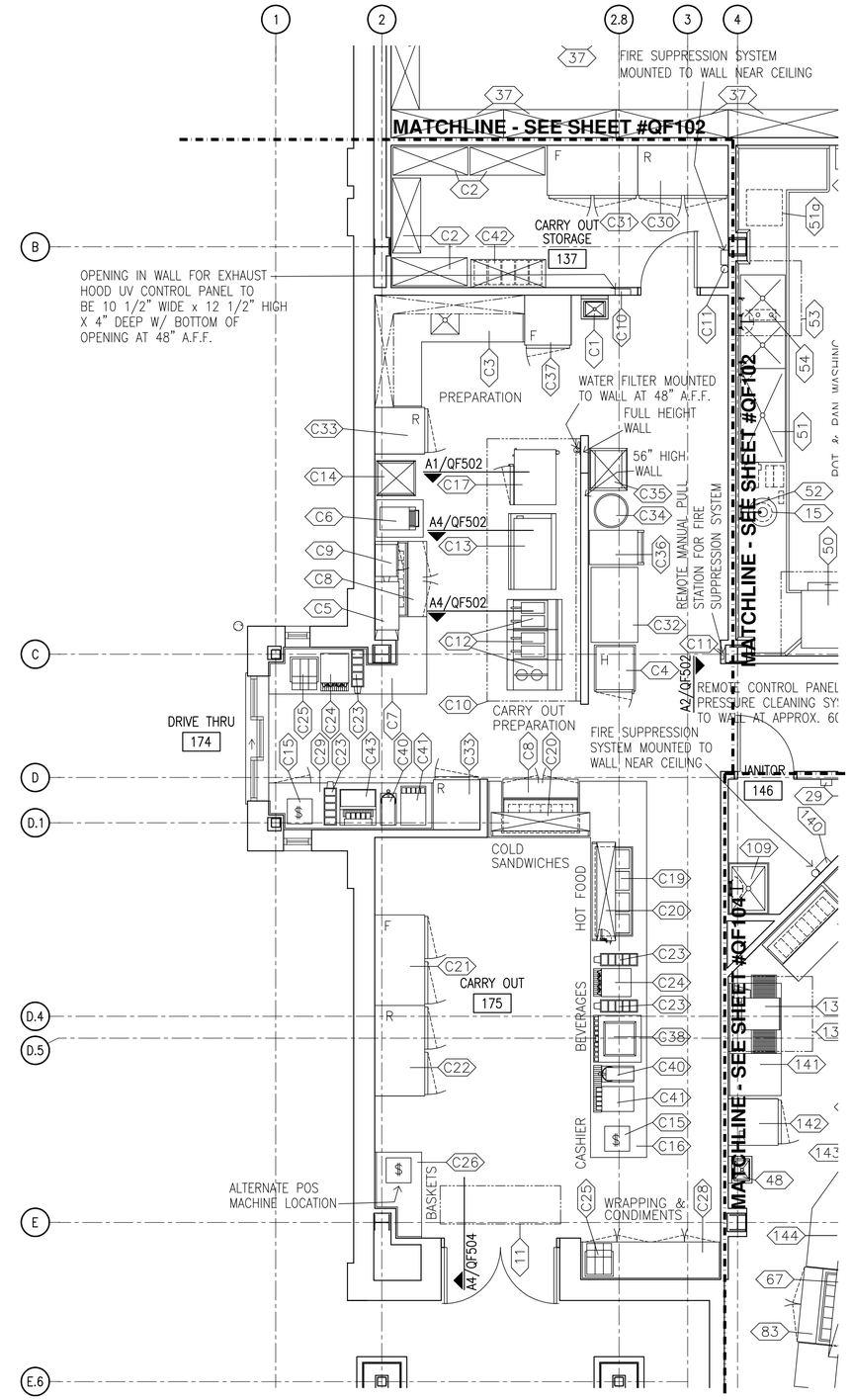


## FOOD SERVICE PLAN - AREA 4

SCALE : 1/4"=1'-0"

US Army Corps of Engineers
Norfolk District

| MARK | DATE | DESCRIPTION | BY | APP |
|---|---|---|---|---|

DATE: 12/11/2009
SCALE: AS NOTED
DESIGNED: JK
CHECKED: JK
DRAWN: JK, TJT
SUBMITTED: JK
PROJECT NO. —
NORFOLK DISTRICT FILE NO. —
SPECIFICATION NO. —
DRAWING NO. QF105
Plot scale: 1:1
Last saved: 12-11-09
File name: QF105.DWG

NORFOLK DISRTICT
CORPS OF ENGINEERS
NORFOLK, VIRGINIA

NAO
CENTER OF
STANDARDIZATION

US ARMY STANDARD DESIGN
500 SOLDIER PERMANENT PARTY
DINING FACILITY

FOOD SERVICE PLAN - AREA 4

SHEET REFERENCE NUMBER
QF105
SHEET OF

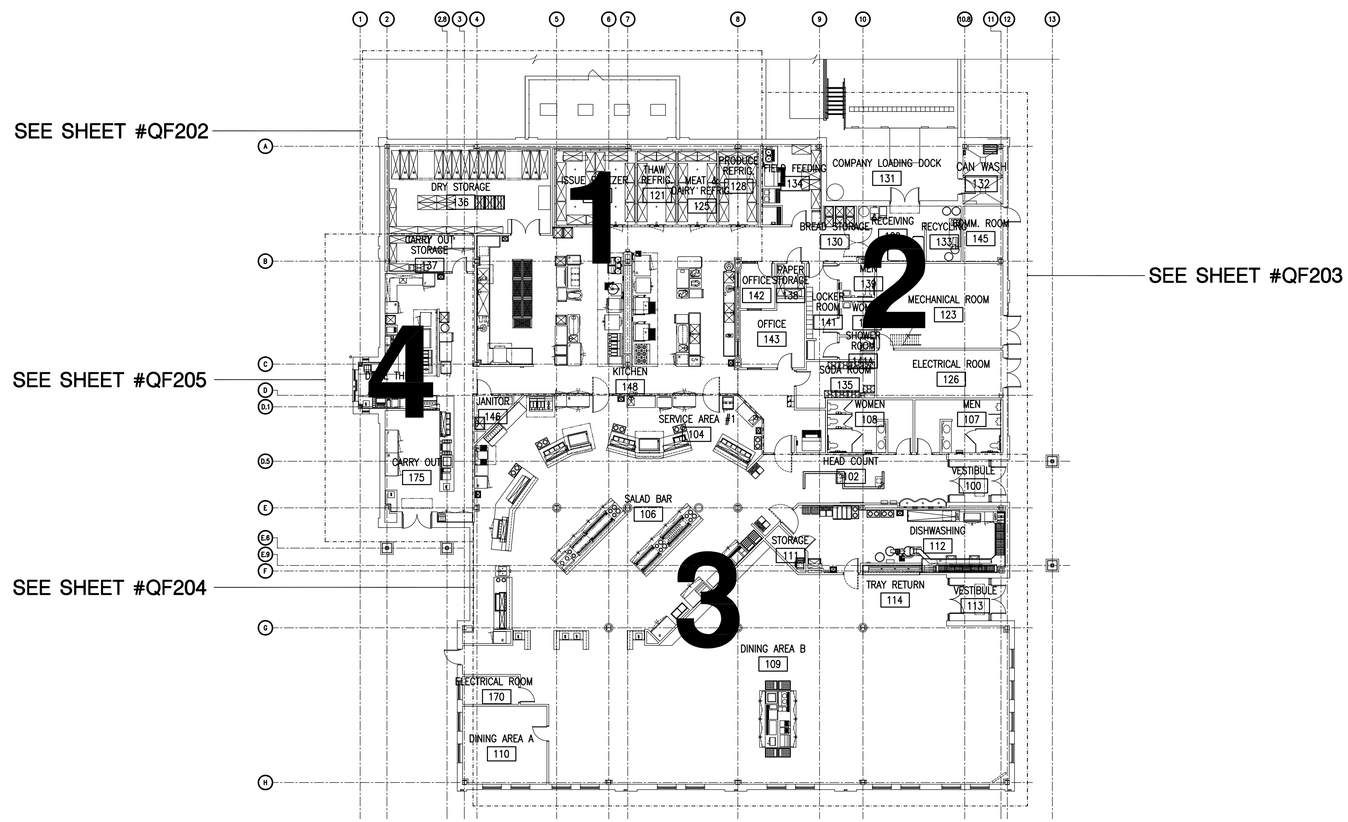


**OVERALL UTILITY REQUIREMENT PLAN**
**SCALE : 1/16"=1'-0"**

US Army Corps of Engineers
Norfolk District

| MARKS | DATE | DESCRIPTION | BY | APP |
|---|---|---|---|---|

DESIGNED: JK
DRAWN: JK,TJT
PROJECT NO. —
CHECKED: JK
SUBMITTED: JK
DATE: 12/11/2009
SCALE: AS NOTED
NORFOLK DISTRICT FILE NO. —
SPECIFICATION NO. —
DRAWING NO. QF201
Last saved: 12-11-09
File name: QF201.DWG
Plot scale: 1:1

NORFOLK DISRTICT
CORPS OF ENGINEERS
NORFOLK, VIRGINIA

NAO
CENTER OF
STANDARDIZATION

US ARMY STANDARD DESIGN
500 SOLDIER PERMANENT PARTY
DINING FACILITY

OVERALL UTILITY REQUIREMENT PLAN

SHEET
REFERENCE
NUMBER
QF201
SHEET OF

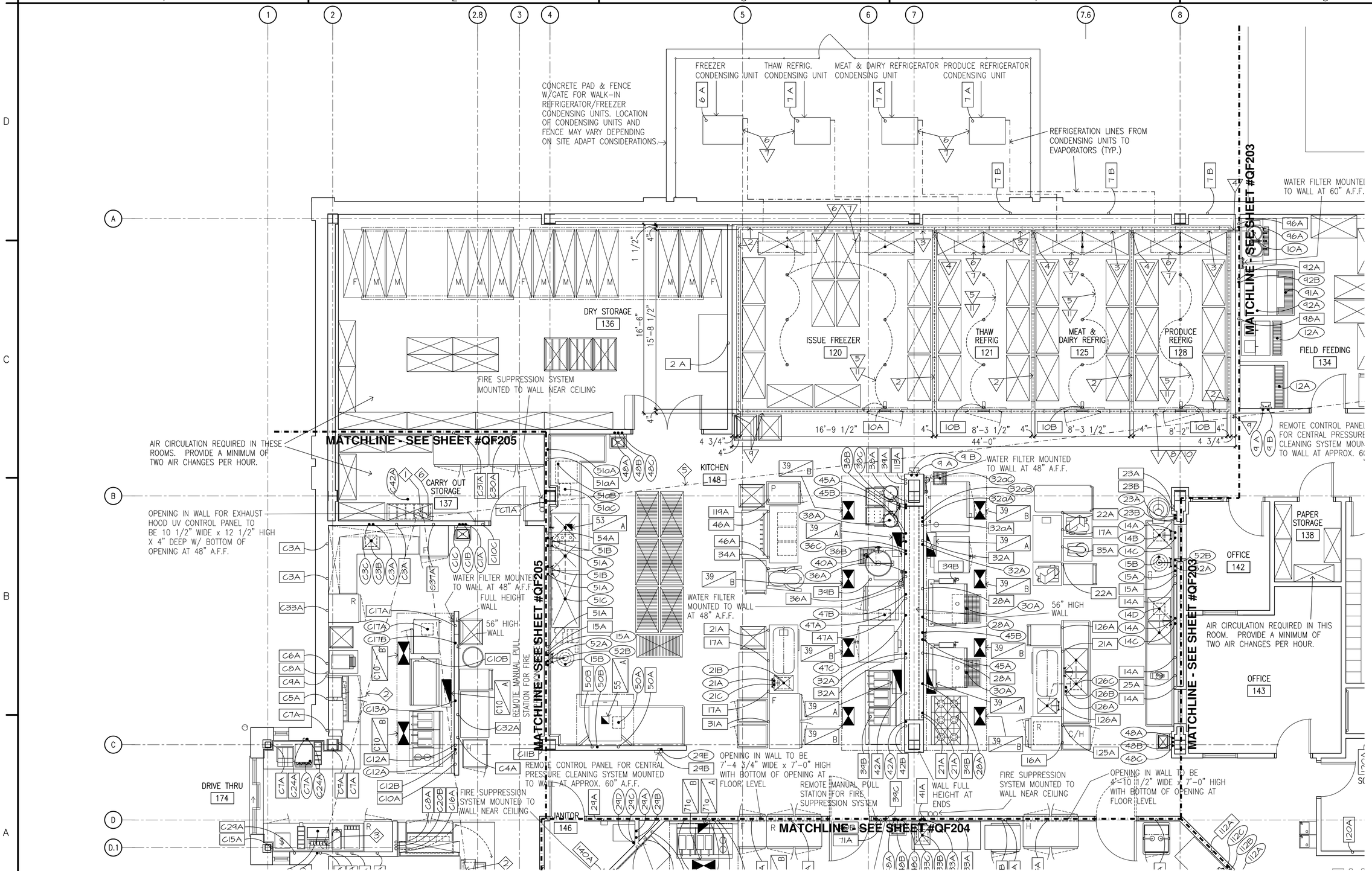


**UTILITY REQUIREMENT PLAN - AREA 1**

SCALE : 1/4"=1'-0"

US Army Corps of Engineers
Norfolk District

| MARK | DATE | DESCRIPTION | BY | APP |
|---|---|---|---|---|

DATE: 12/11/2009
SCALE: AS NOTED
NORFOLK DISTRICT FILE NO. —
SPECIFICATION NO. —
Plot scale: 1:1

CHECKED: JK
SUBMITTED: JK
DESIGNED: JK
DRAWN: JK,TJT
PROJECT NO. —
DRAWING NO. QF202
Last revised: Jan-11-09
File name: QF202.DWG

NORFOLK DISTRICT
CORPS OF ENGINEERS
NORFOLK, VIRGINIA

NAO CENTER OF STANDARDIZATION

US ARMY STANDARD DESIGN
500 SOLDIER PERMANENT PARTY DINING FACILITY

UTILITY REQUIREMENT PLAN - AREA 1

SHEET REFERENCE NUMBER
QF202

SHEET OF

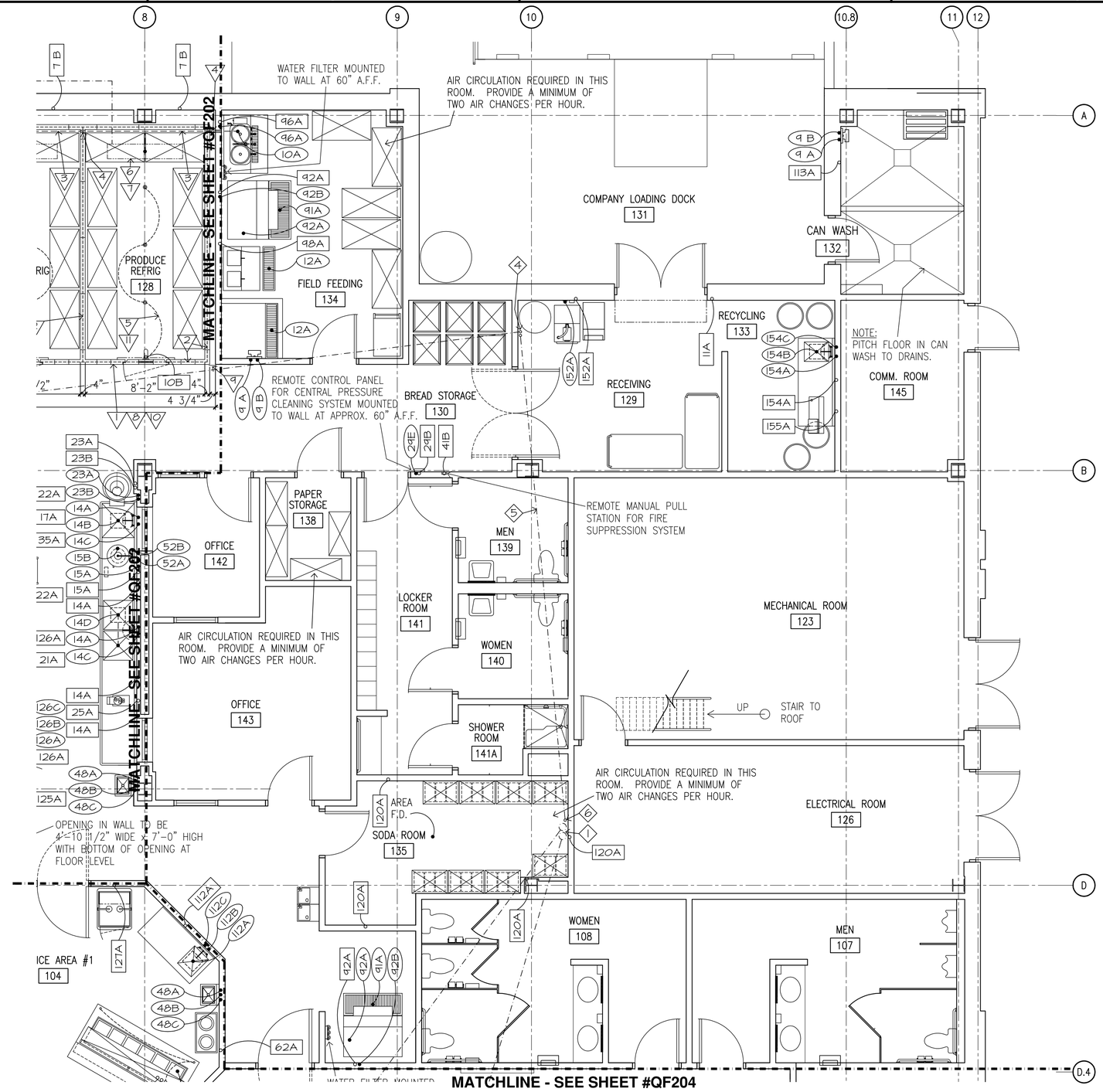


## UTILITY REQUIREMENT PLAN - AREA 2

SCALE : 1/4"=1'-0"

US Army Corps of Engineers
Norfolk District

| MARK | DATE | DESCRIPTION | BY | APP |
|---|---|---|---|---|

DESIGNED: JK | CHECKED: JK | DATE: 12/11/2009
DRAWN: JK,TJT | SUBMITTED: JK | SCALE: AS NOTED
PROJECT NO. — | NORFOLK DISTRICT FILE NO. —
DRAWING NO. QF203 | SPECIFICATION NO. —
Last saved on 12-11-09 | Plot scale: 1:1
File name: QF203.DWG

NORFOLK DISRTICT
CORPS OF ENGINEERS
NORFOLK, VIRGINIA

NAO CENTER OF STANDARDIZATION

US ARMY STANDARD DESIGN
500 SOLDIER PERMANENT PARTY DINING FACILITY

UTILITY REQUIREMENT PLAN - AREA 2

SHEET REFERENCE NUMBER
QF203
SHEET OF

REMOTE CONTROL PANEL FOR CENTRAL PRESSURE CLEANING SYSTEM MOUNTED TO WALL AT APPROX. 60" A.F.F.

OPENING IN WALL TO BE 7'-4 3/4" WIDE x 7'-0" HIGH WITH BOTTOM OF OPENING AT FLOOR LEVEL

REMOTE MANUAL PULL STATION FOR FIRE SUPPRESSION SYSTEM

WALL FULL HEIGHT AT ENDS

FIRE SUPPRESSION SYSTEM MOUNTED TO WALL NEAR CEILING

OPENING IN WALL TO BE 4'-10 1/2" WIDE x 7'-0" HIGH WITH BOTTOM OF OPENING AT FLOOR LEVEL

MATCHLINE - SEE SHEET #QF202

MATCHLINE - SEE SHEET #QF203

MATCHLINE - SEE SHEET #QF205

JANITOR 146

SERVICE AREA #1 104

SODA ROOM 135

AREA F.D.

ELECTRICAL ROOM 126

WOMEN 108

MEN 107

WATER FILTER MOUNTED TO WALL AT 60" A.F.F.

HEAD COUNT 102

VESTIBULE 100

OPENINGS IN WALLS FOR EXHAUST HOOD UV CONTROL PANELS TO BE 10 1/2" WIDE x 12 1/2" HIGH X 4" DEEP W/ BOTTOM OF OPENINGS AT 48" A.F.F.

REMOTE CONTROL PANEL FOR CENTRAL PRESSURE CLEANING SYSTEM MOUNTED TO WALL AT APPROX. 60" A.F.F.

SALAD BAR 106

STORAGE 111

DISHWASHING 112

AREA F.D.

SILL HEIGHT TO BE 3'-0" A.F.F.

TRAY RETURN 114

OPENING IN WALL TO BE 19 1/2" WIDE x 15" HIGH WITH SILL AT 2'-8" A.F.F. - S/S FRAME & SLIDE-UP DOOR FURNISHED W/ EQUIP.

1-1/2" RECIRCULATION LINE FROM PULPING SYSTEM TO INLET AT HEAD OF TROUGH. PIPING SHALL BE LOCATED UP BEHIND TROUGH. 1 1/2" BALL VALVE TO BE PROVIDED AT INLET. TROUGH INLET FURNISHED WITH EQUIPMENT.

VESTIBULE 113

ELECTRICAL ROOM 170

DINING AREA A 110

DINING AREA B 109

## UTILITY REQUIREMENT PLAN - AREA 3

SCALE : 1/4"=1'-0"

US Army Corps of Engineers
Norfolk District

| MARK | DATE | DESCRIPTION | BY | APP |
|---|---|---|---|---|

DATE: 11-25-09
SCALE: AS NOTED
NORFOLK DISTRICT FILE NO.
SPECIFICATION NO.
Plot scale: 1:1

DESIGNED: JK
CHECKED: JK
DRAWN: JK, TJT
SUBMITTED: JK
PROJECT NO.
DRAWING NO. QF204
Last Revised: 11-24-09
File name: QF204.DWG

NORFOLK DISRTICT
CORPS OF ENGINEERS
NORFOLK, VIRGINIA

500 - PERSON PERMANENT PARTY DINING FACILITY PROTOTYPE

UTILITY REQUIREMENT PLAN - AREA 3

SHEET REFERENCE NUMBER
QF204
SHEET OF

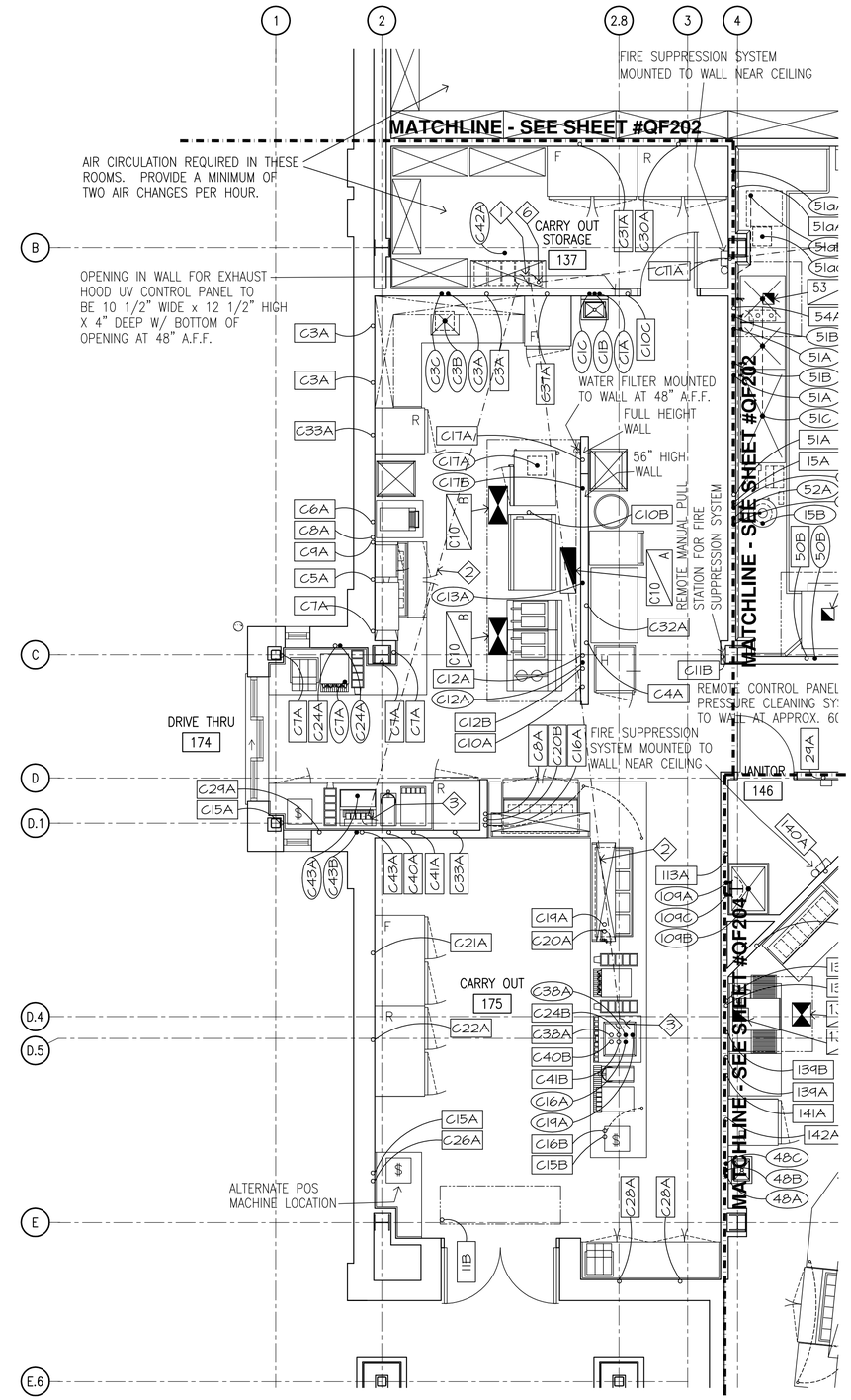


## UTILITY REQUIREMENT PLAN - AREA 4

SCALE : 1/4"=1'-0"

US Army Corps of Engineers
Norfolk District

| MARK | DATE | DESCRIPTION | BY | APP |
|---|---|---|---|---|

DESIGNED: JK
CHECKED: JK
DRAWN: JK, TJT
SUBMITTED: JK
DATE: 12/11/2009
SCALE: AS NOTED
PROJECT NO. —
NORFOLK DISTRICT FILE NO. —
SPECIFICATION NO. —
DRAWING NO. QF205
Last saved on 12-11-09
File name: QF205.DWG
Plot scale: 1:1

NORFOLK DISRTICT
CORPS OF ENGINEERS
NORFOLK, VIRGINIA

NAO
CENTER OF
STANDARDIZATION

US ARMY STANDARD DESIGN
500 SOLDIER PERMANENT PARTY
DINING FACILITY

UTILITY REQUIREMENT PLAN - AREA 4

SHEET REFERENCE NUMBER
QF205
SHEET OF

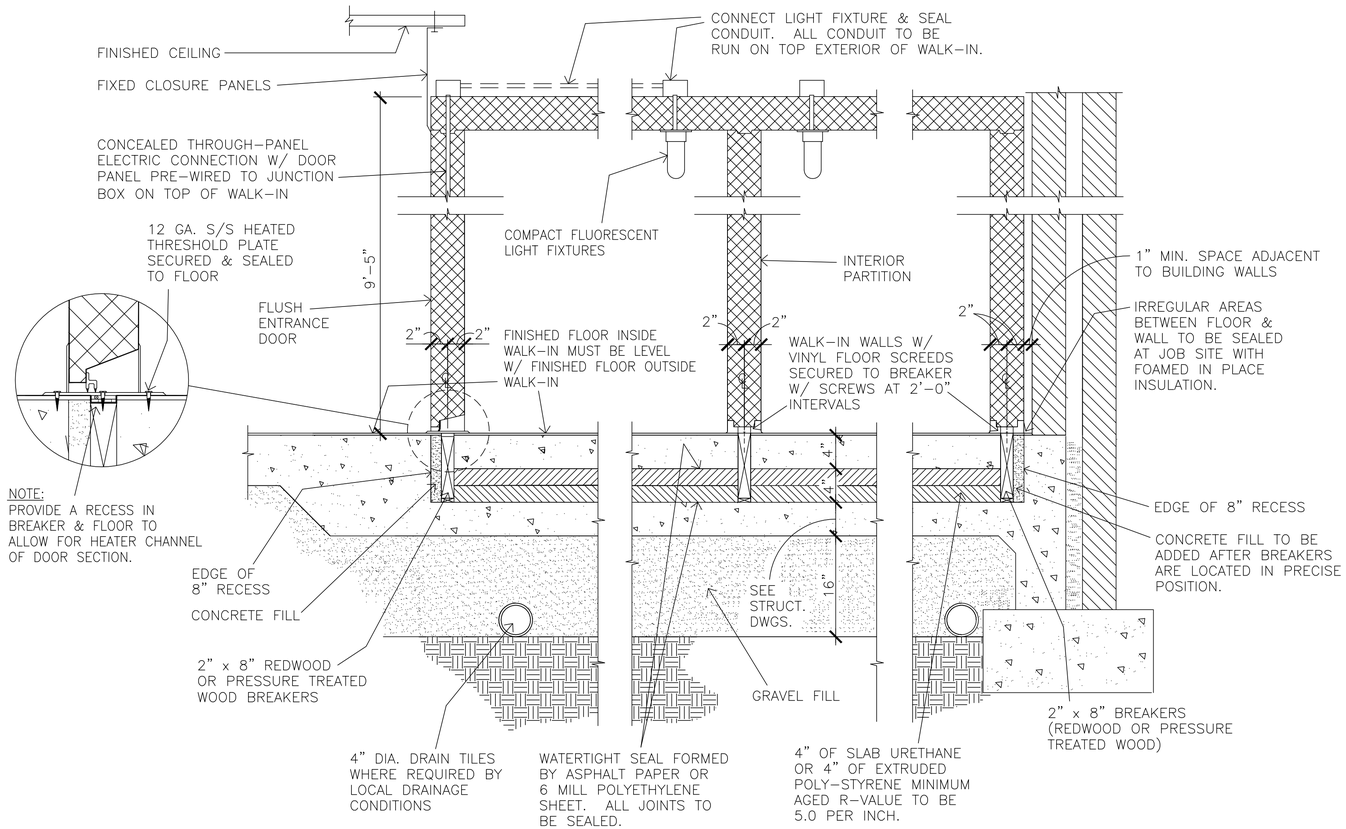


**B1 / QF501 WALK-IN SECTION**
SCALE: NONE

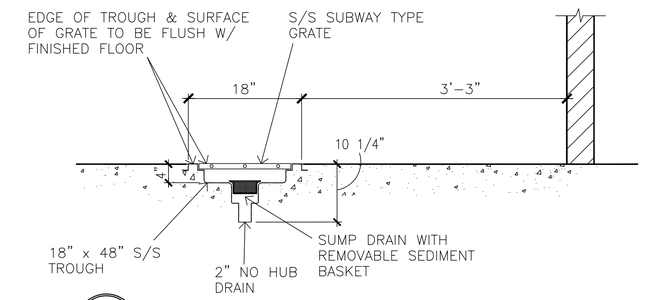


**D4 / QF501 DRAIN TROUGH AT ICE MACHINE**
SCALE: NONE

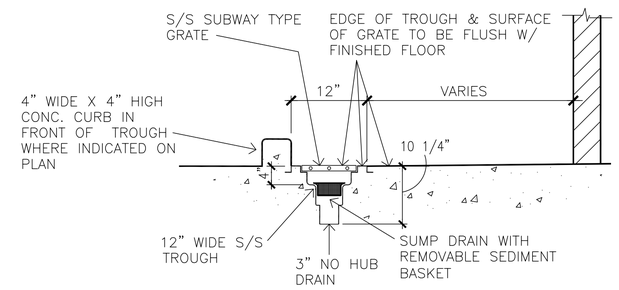


**C4 / QF501 DRAIN TROUGH**
SCALE: NONE

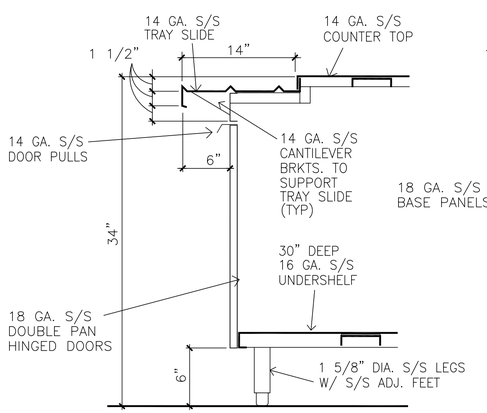


**A1 / QF501 TYPICAL COUNTER SECTION**
SCALE: NONE

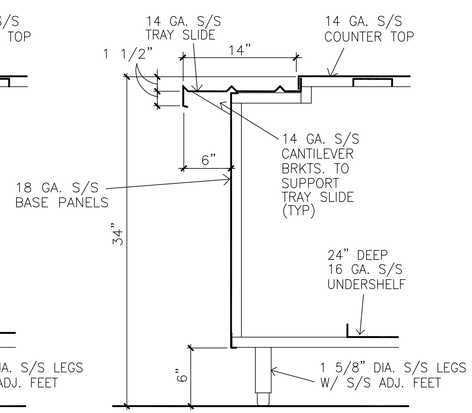


**A2 / QF501 TYPICAL COUNTER SECTION**
SCALE: NONE

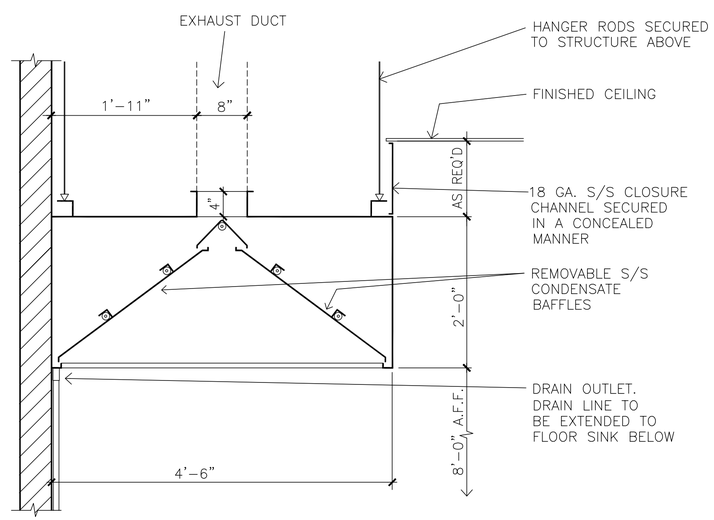


**A3 / QF501 CONDENSATE HOOD SECTION**
SCALE: NONE

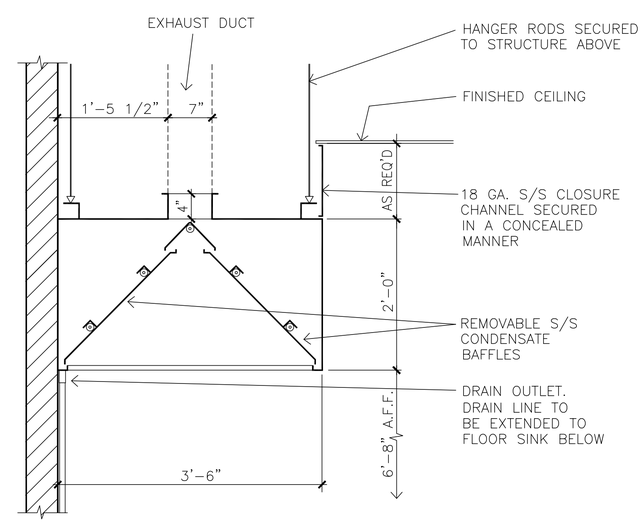


**A4 / QF501 CONDENSATE HOOD SECTION**
SCALE: NONE

US Army Corps of Engineers
Norfolk District

| MARK | DATE | DESCRIPTION | BY | APP |
|---|---|---|---|---|

DESIGNED: JK
DRAWN: JK, TJT
PROJECT NO. —
CHECKED: JK
SUBMITTED: JK
DATE: 12/11/2009
SCALE: AS NOTED
NORFOLK DISTRICT FILE NO. —
SPECIFICATION NO. —
DRAWING NO. QF501
Last revised on 12-11-09
File name: QF501.DWG
Plot scale: 1:1

NORFOLK DISRTICT
CORPS OF ENGINEERS
NORFOLK, VIRGINIA

NAO CENTER OF STANDARDIZATION

US ARMY STANDARD DESIGN
500 SOLDIER PERMANENT PARTY DINING FACILITY

FOOD SERVICE DETAILS

SHEET REFERENCE NUMBER
QF501
SHEET OF

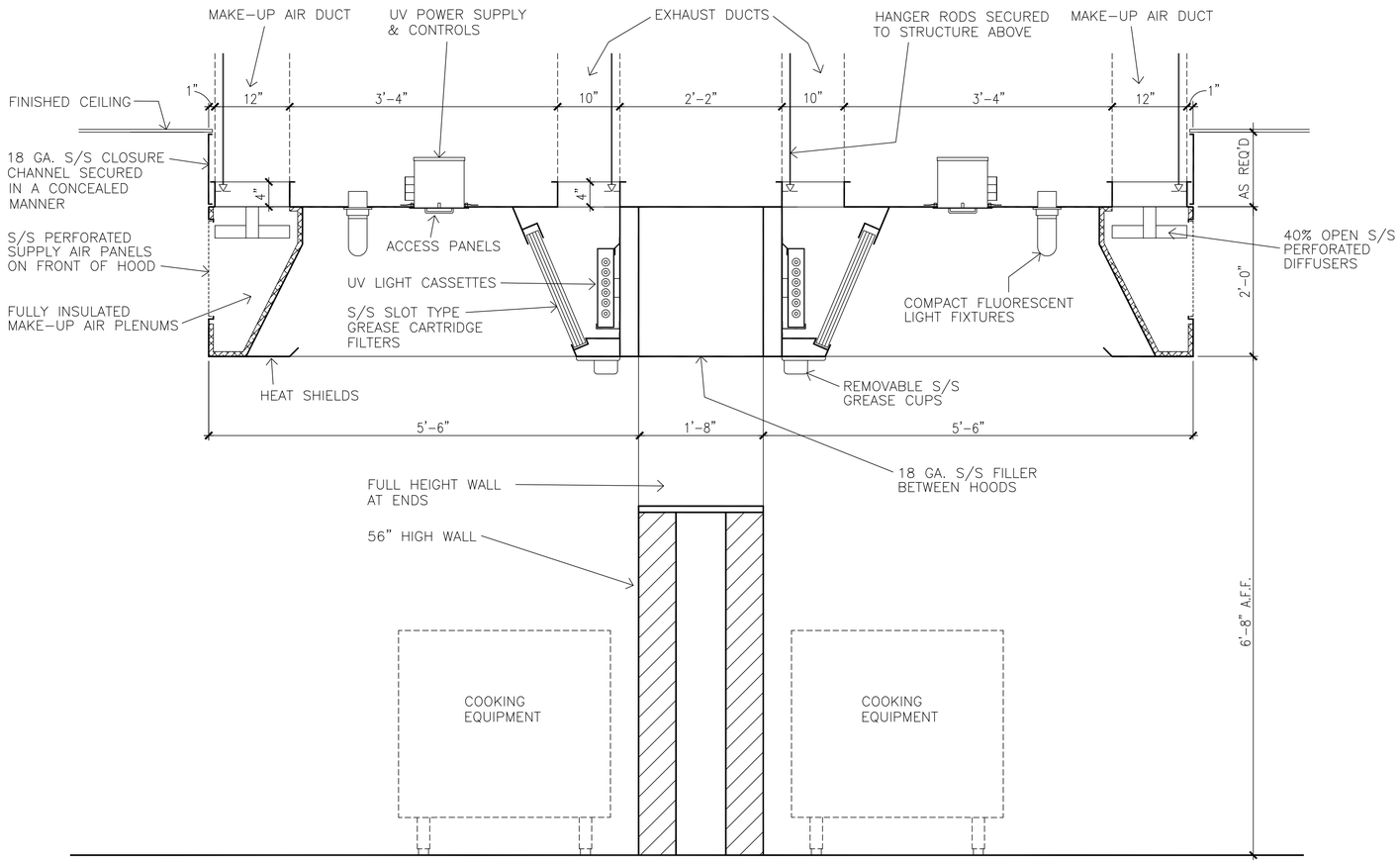


**B1 / QF502 EXHAUST HOOD SECTION**
SCALE: NONE (ITEM #39)

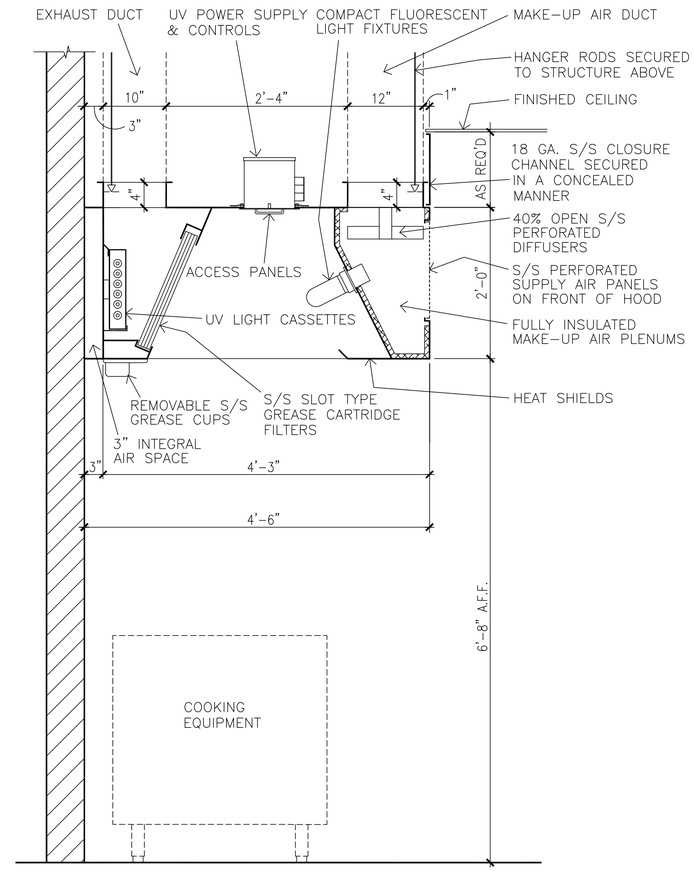


**B4 / QF502 EXHAUST HOOD SECTION**
SCALE: NONE (ITEMS #71a & #139)

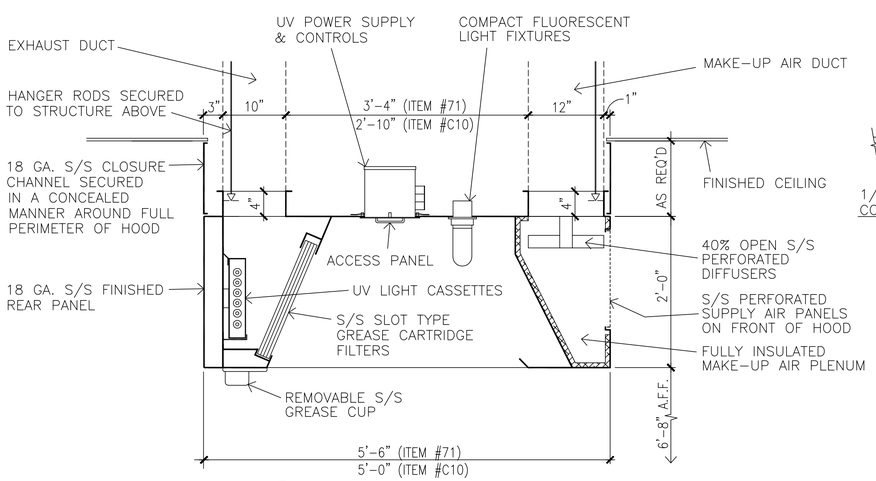


**A1 / QF502 EXHAUST HOOD SECTION**
SCALE: NONE (ITEMS #71 & #C10)

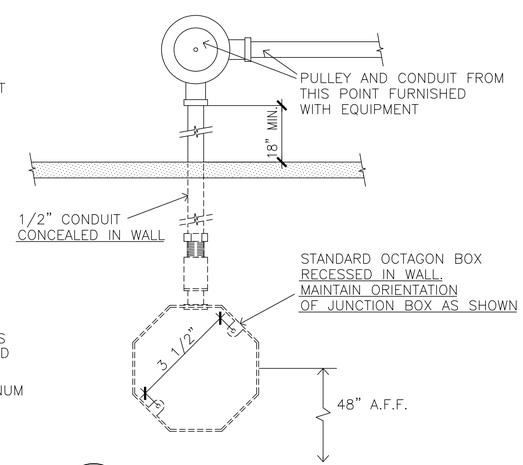


**A2 / QF502 REMOTE PULL STATION**
SCALE: NONE

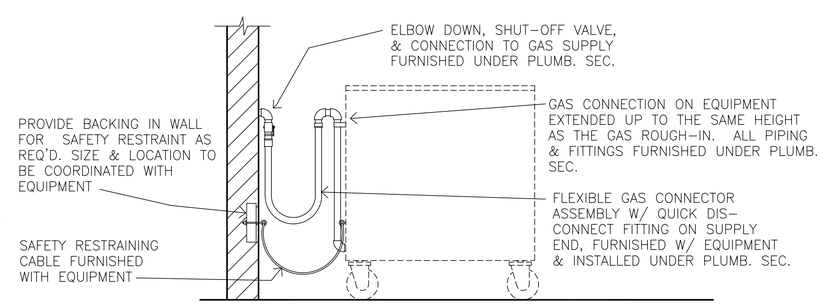


**A4 / QF502 GAS CONNECTOR DETAIL**
SCALE: NONE

US Army Corps of Engineers
Norfolk District

| MARK | DATE | DESCRIPTION | BY | APP |
|---|---|---|---|---|

DATE: 12/11/2009
SCALE: AS NOTED
CHECKED: JK
SUBMITTED: JK
NORFOLK DISTRICT FILE NO. —
SPECIFICATION NO. —
DESIGNED: JK
DRAWN: JK, TJT
PROJECT NO. —
DRAWING NO. QF502
Last Revised: 12-11-09
File name: QF502.DWG
Plot scale: 1:1

NORFOLK DISRTICT
CORPS OF ENGINEERS
NORFOLK, VIRGINIA

NAO CENTER OF STANDARDIZATION

US ARMY STANDARD DESIGN
500 SOLDIER PERMANENT PARTY DINING FACILITY

FOOD SERVICE DETAILS

SHEET REFERENCE NUMBER
QF502
SHEET OF

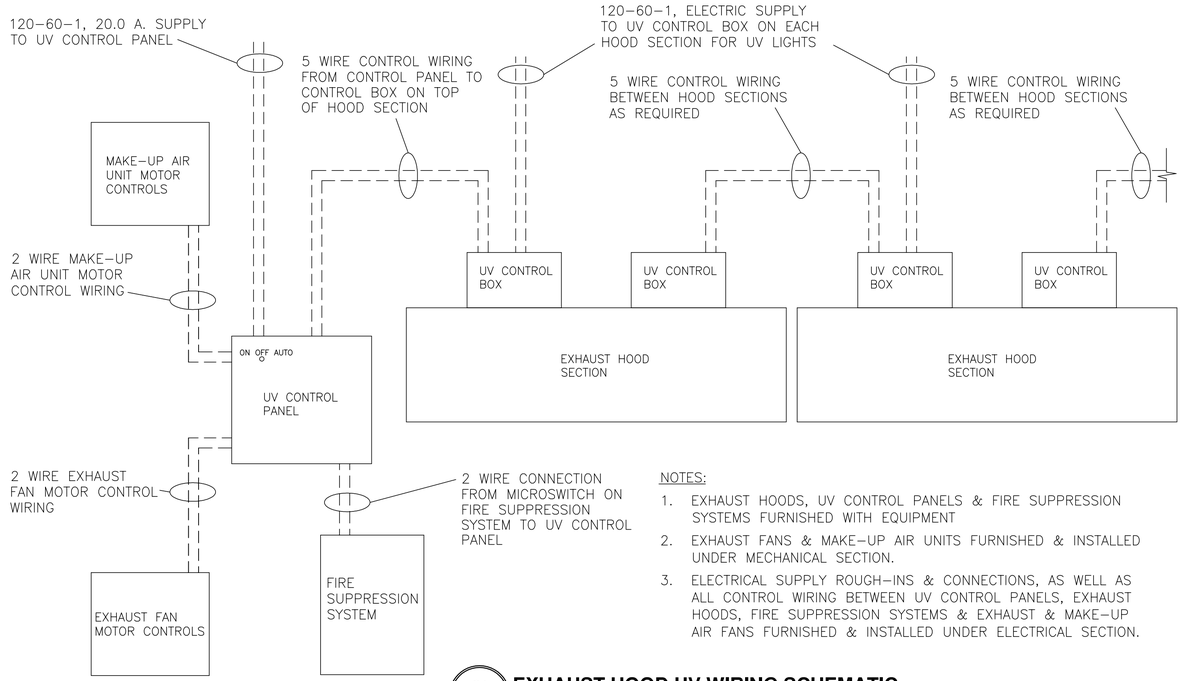


NOTES:

1. EXHAUST HOODS, UV CONTROL PANELS & FIRE SUPPRESSION SYSTEMS FURNISHED WITH EQUIPMENT
2. EXHAUST FANS & MAKE-UP AIR UNITS FURNISHED & INSTALLED UNDER MECHANICAL SECTION.
3. ELECTRICAL SUPPLY ROUGH-INS & CONNECTIONS, AS WELL AS ALL CONTROL WIRING BETWEEN UV CONTROL PANELS, EXHAUST HOODS, FIRE SUPPRESSION SYSTEMS & EXHAUST & MAKE-UP AIR FANS FURNISHED & INSTALLED UNDER ELECTRICAL SECTION.

C1 / QF503 **EXHAUST HOOD UV WIRING SCHEMATIC**
SCALE: NONE

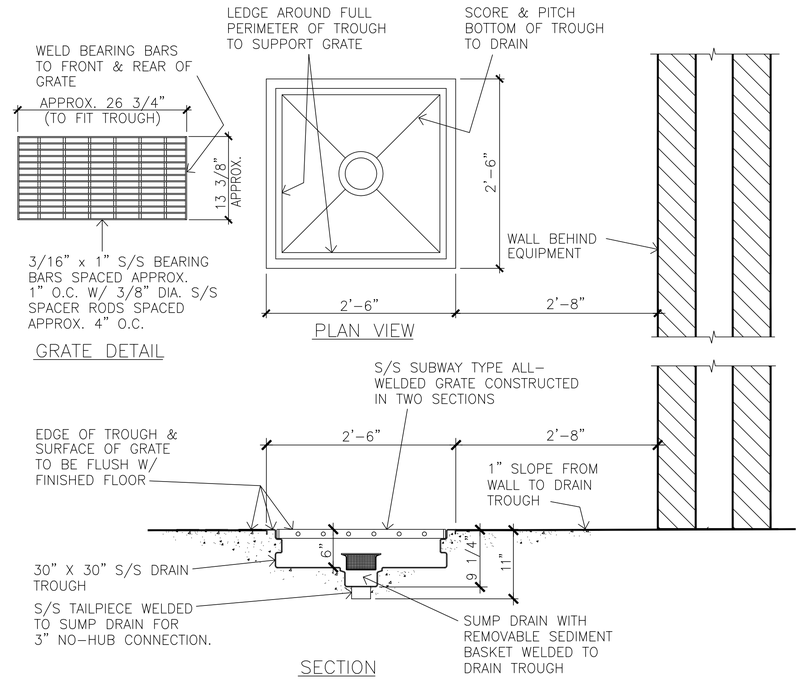


C3 / QF503 **DRAIN TROUGH AT BRAISING PANS**
SCALE: NONE

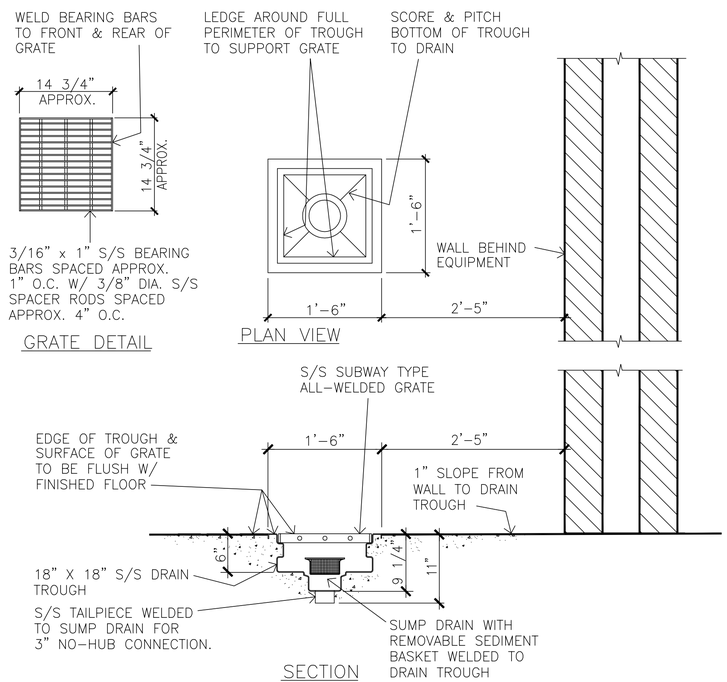


A1 / QF503 **DRAIN TROUGH AT KETTLES**
SCALE: NONE

NOTE:

1. ALL PIPING, UNIONS, INSULATION AND GATE OR BALL VALVES FURNISHED & INSTALLED UNDER PLUMBING SECTION.
2. PRESSURE RELIEF VALVE, TEMPERATURE/ PRESSURE GAUGES & SHOCK ABSORBER FURNISHED WITH BOOSTER HEATER & INSTALLED UNDER PLUMBING SECTION.

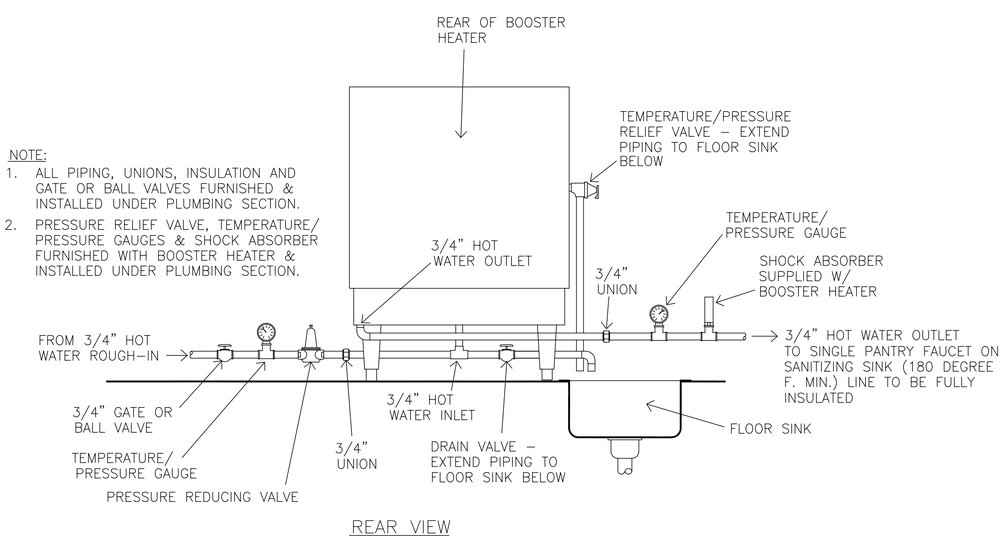


A3 / QF503 **BOOSTER HEATER PIPING**
SCALE: NONE

US Army Corps of Engineers
Norfolk District

| MARK | DATE | DESCRIPTION | BY | APR |
|---|---|---|---|---|

DESIGNED: JK
DRAWN: JK/KJT
CHECKED: JK
SUBMITTED: JK
DATE: 12/25/2009
SCALE: AS NOTED
NORFOLK DISTRICT FILE NO. —
SPECIFICATION NO. —
PROJECT NO. —
DRAWING NO. QF503
Last worked on: 12-24-09
File name: QF503.DWG
Plot scale: 1:1

NORFOLK DISRTICT
CORPS OF ENGINEERS
NORFOLK, VIRGINIA

NAO CENTER OF STANDARDIZATION

500 SPACE PANTRY DESIGN
500 SEAT CAFETERIA DINING FACILITY

FOOD SERVICE DETAILS

SHEET REFERENCE NUMBER
QF503
SHEET OF

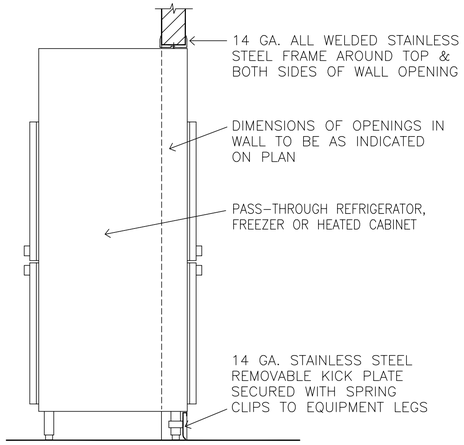


**C1 / QF504 PASS THROUGH CABINET SECTION**
SCALE: NONE

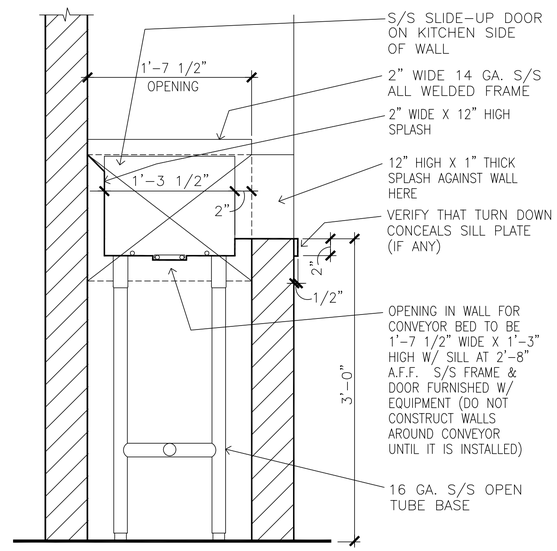


**C2 / QF504 TRAY RETURN SECTION**
SCALE: NONE

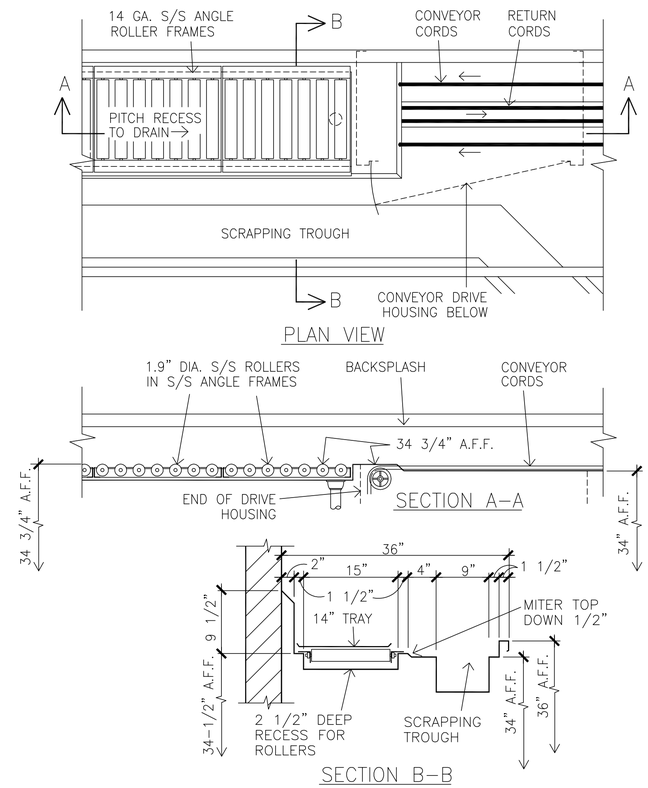


**B4 / QF504 SOILED TRAY CONVEYOR DETAILS**
SCALE: NONE

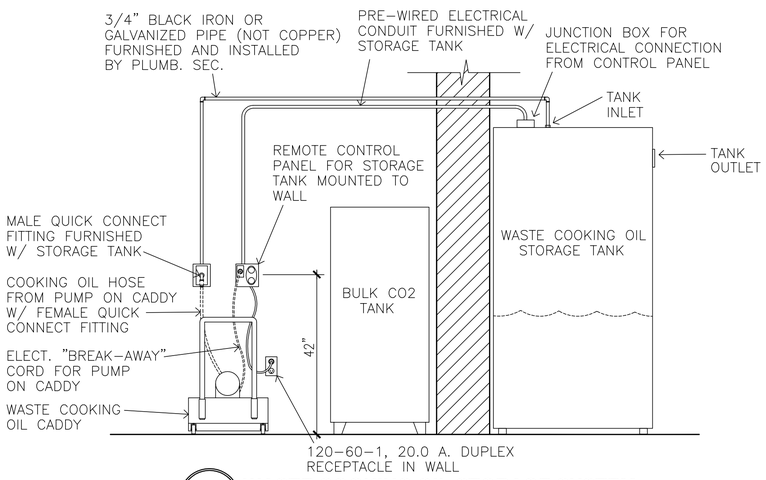


**B1 / QF504 WASTE COOKING OIL STORAGE SYSTEM**
SCALE: NONE

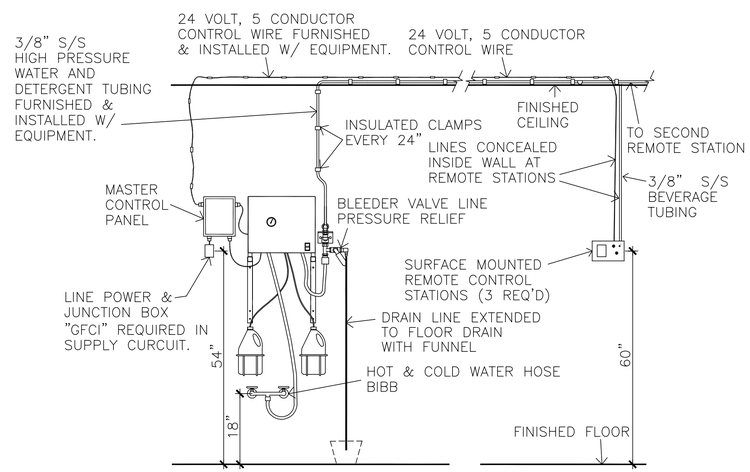


**A3 / QF504 CENTRAL PRESSURE CLEANING SYSTEM**
SCALE: NONE

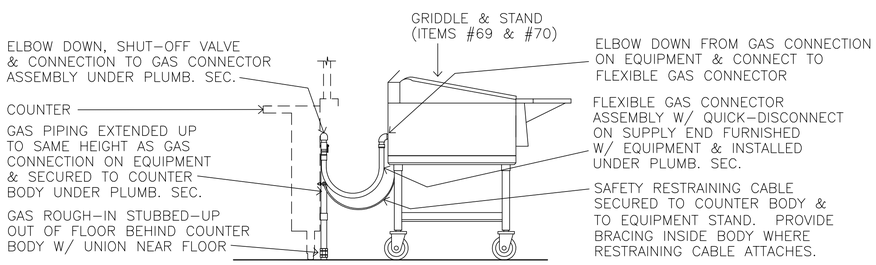


**A1 / QF504 GAS CONNECTOR DETAIL**
SCALE: NONE

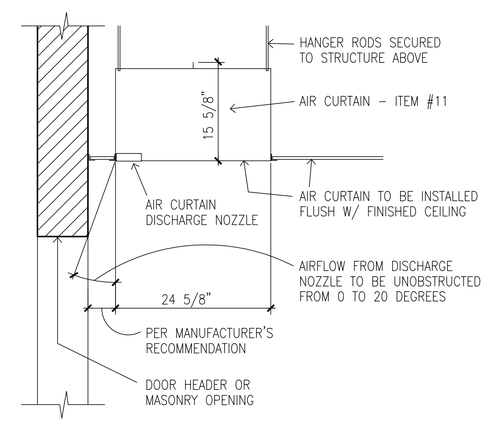


**A4 / QF504 AIR CURTAIN SECTION**
SCALE: NONE

US Army Corps of Engineers
Norfolk District

| MARK | DATE | DESCRIPTION | BY | APP |
|---|---|---|---|---|

DATE: 12/11/2009
SCALE: AS NOTED
NORFOLK DISTRICT FILE NO. —
SPECIFICATION NO. —
Plot scale: 1:1

DESIGNED: JK | CHECKED: JK
DRAWN: JK,TJT | SUBMITTED: JK
PROJECT NO. — | DRAWING NO. QF504
Last revised: 12-11-09
File name: QF504.DWG

NORFOLK DISRTICT
CORPS OF ENGINEERS
NORFOLK, VIRGINIA

NAO CENTER OF STANDARDIZATION

US ARMY STANDARD DESIGN
500 SOLDIER PERMANENT PARTY DINING FACILITY

FOOD SERVICE DETAILS

SHEET REFERENCE NUMBER
QF504
SHEET OF

| | | | | | ELECTRICAL SCHEDULE | | | | | | | PLUMBING SCHEDULE | | | | | | | | | VENTILATION SCHEDULE | | | | | | | |
|---|---|---|---|---|---|---|---|---|---|---|---|---|---|---|---|---|---|---|---|---|---|---|---|---|---|---|---|---|
| ITEM NUMBER | QTY. | DESCRIPTION | EQUIP. CLASS | COMMENTS | ELEC. SYMBOL | VOLTS | PHASE | AMPS | CONN. | HT. A.F.F. | REMARKS | PLUMBING SYMBOL | H.W. | C.W. | WASTE SIZE | WASTE TYPE | GAS | GAS MBTU | HT. A.F.F. | REMARKS | VENTILATION SYMBOL | QTY. | EXHAUST COLLAR | EXHAUST CFM | SUPPLY COLLAR | SUPPLY CFM | STATIC PRESSURE | HT. A.F.F. |
| 1 | 1 | RECEIVING SCALE ON MOBILE STAND | C | DIAL INDICATING SCALE, 100 LB. CAPACITY | | | | | | | | | | | | | | | | | | | | | | | | |
| 2 | 1 | RECEIVING DESK | C | SINGLE PEDESTAL STEEL DESK | 2A | 120 | 1 | 10.0 | D.R. | 24" | CONVENIENCE RECEPTACLE | | | | | | | | | | | | | | | | | |
| 3 | 4 | SHELVING UNITS, NON FOOD | C | 18" X 36" AND 18" X 42" MOBILE SHELVING UNITS | | | | | | | | | | | | | | | | | | | | | | | | |
| 4 | 2 | PLATFORM TRUCKS | C | 28" X 60" ALUMINUM PLATFORM | | | | | | | | | | | | | | | | | | | | | | | | |
| 5 | 43 | SHELVING UNITS | C | 24" X 48" MOBILE SHELVING UNITS | | | | | | | | | | | | | | | | | | | | | | | | |
| 6 | 1 | FREEZER COND. UNIT & EVAPORATORS | A | | 6A | 208 | 3 | 24.5 | J.B. | 4" | CONNECT TO CONDENSING UNIT & FROM CONDENSING UNIT TO EVAPORATOR INSIDE WALK-IN – SEE WALK-IN NOTES | | | | | | | | | | | | | | | | | |
| 7 | 3 | REFRIGERATOR COND. UNITS & EVAPORATORS | A | | 7A | 208 | 3 | 5.8 | J.B. | 4" | CONNECT TO CONDENSING UNIT – SEE WALK-IN NOTES | | | | | | | | | | | | | | | | | |
| | | | | | 7B | 120 | 1 | 5.4 | J.B. | 120" | CONNECT TO EVAPORATOR INSIDE WALK-IN | | | | | | | | | | | | | | | | | |
| 8 | 4 | DOORWAY CLOSURES | A | | | | | | | | | | | | | | | | | | | | | | | | | |
| 9 | 4 | FAUCET HOSE STATIONS | A | | | | | | | | | 9A | 1/2" | | | | | | 48" | 140 DEGREES F. MIN. – CONNECT TO MIXING VALVE, INLETS 6" O.C. | | | | | | | | |
| | | | | | | | | | | | | 9B | | 1/2" | | | | | 48" | CONNECT TO MIXING VALVE, INLETS 6" O.C. | | | | | | | | |
| 10 | 1 | WALK-IN REFRIGERATORS & FREEZER | A | | 10A | 120 | 1 | 12.0 | J.B. | 113" | CONNECT TO J.B. IN WALK-IN FOR P.W. DOOR LIGHT, DOOR HEATER & FIELD WIRED CENTER LIGHTS, PRESSURE RELIEF PORT AND DRAIN LINE HEAT TAPE | 10A | | | 2" | F.F.D. | | | S.U. | EXTEND DRAIN LINE FROM 5 EVAPORATORS INSIDE WALK-IN AND FROM URN STAND – ITEM #97 | | | | | | | | |
| | | | | | 10B | 120 | 1 | 7.0 | J.B. | 113" | CONNECT TO J.B. IN WALK-IN FOR P.W. DOOR LIGHT, DOOR HEATER & FIELD WIRED CENTER LIGHTS | | | | | | | | | | | | | | | | | |
| 11 | 4 | AIR CURTAINS | A | | 11A | 120 | 1 | 14.4 | J.B. | 104" | CONNECT TO DOOR SWITCHES, AND FROM SWITCHES TO AIR CURTAIN | | | | | | | | | | | | | | | | | |
| | | | | | 11B | 120 | 1 | 14.4 | J.B. | – | J.B. ABOVE FINISHED CEILING. CONNECT TO AIR CURTAIN. ALSO INTERWIRE FROM AIR CURTAIN TO DOOR SWITCHES AND TO REMOTE SPEED SELECTOR SWITCH. | | | | | | | | | | | | | | | | | |
| | | | | | 11C | | | | | | NOT USED | | | | | | | | | | | | | | | | | |
| 12 | 2 | FLOOR TROUGHS W/ GRATES | A | | | | | | | | | 12A | | | 3" | DIRECT | | | S.U. | CONNECT TO RECESSED TROUGH IN FLOOR – SEE DETAIL #C4/QF501 | | | | | | | | |
| 12a | 3 | CAN RACKS | C | | | | | | | | | | | | | | | | | | | | | | | | | |
| 13 | 1 | DUNNAGE RACK | C | | | | | | | | | | | | | | | | | | | | | | | | | |
| 14 | 1 | VEGETABLE PREP SINK | A | | 14A | 120 | 1 | 10.0 | D.R. | 52" | CONVENIENCE RECEPTACLE | 14A | 1/2" | | | | | | 18" | CONNECT TO FAUCET | | | | | | | | |
| | | | | | | | | | | | | 14B | | | 2" | 12" X 12" F.S. | | | S.U. | EXTEND DRAIN LINE FROM SINK | | | | | | | | |
| | | | | | | | | | | | | 14C | | 1/2" | | | | | 18" | CONNECT TO FAUCET | | | | | | | | |
| | | | | | | | | | | | | 14D | | | 3" | 12" X 12" F.S. | | | S.U. | EXTEND DRAIN LINE FROM 2 SINKS | | | | | | | | |
| 15 | 2 | DISPOSERS | A | | 15A | 208 | 3 | 8.4 | J.B. | 24" | CONNECT TO SWITCH & FROM SWITCH TO DISPOSER & SOLENOID VALVE | 15A | | | 3' | DIRECT | | | 8" | CONNECT TO DISPOSER | | | | | | | | |
| | | | | | | | | | | | | 15B | | 1/2" | | | | | – | CONNECT FROM PRE-RINSE SPRAY C.W. ROUGH-IN – SEE #52A | | | | | | | | |
| 16 | 1 | REFRIGERATOR, ROLL-IN | A | ONE SECTION, W/ MOBILE RACK | 16A | 120 | 1 | 10.6 | J.B. | – | PROVIDE J.B. ABOVE CEILING & PENDANT CORD WITH D.R. AT 78" A.F.F. | | | | | | | | | | | | | | | | | |
| 17 | 2 | TABLES | C | | 17A | 120 | 1 | 15.0 | J.B. | – | PROVIDE J.B. ABOVE CEILING & PENDANT CORD WITH CONVENIENCE D.R. AT 78" A.F.F. | | | | | | | | | | | | | | | | | |
| 18 | – | NOT USED | – | | | | | | | | | | | | | | | | | | | | | | | | | |
| 19 | 3 | EQUIPMENT STANDS | C | | | | | | | | | | | | | | | | | | | | | | | | | |
| 20 | 1 | STORAGE SHELVING SYSTEM | A | | | | | | | | | | | | | | | | | | | | | | | | | |
| 21 | 2 | TABLES W/ SINK | A | | 21A | 120 | 1 | 15.0 | J.B. | – | PROVIDE J.B. ABOVE CEILING & PENDANT CORD WITH CONVENIENCE D.R. AT 78" A.F.F. | 21A | | 1/2" | | | | | S.U. | CONNECT TO FAUCET | | | | | | | | |
| | | | | | | | | | | | | 21B | | | 2" | 12" X 12" F.S | | | S.U. | EXTEND DRAIN LINE FROM SINK | | | | | | | | |
| | | | | | | | | | | | | 21C | 1/2" | | | | | | S.U. | CONNECT TO FAUCET | | | | | | | | |
| 22 | 2 | MEAT SLICING MACHINES | C | | 22A | 120 | 1 | 6.0 | J.B. | – | PROVIDE J.B. ABOVE CEILING & PENDANT CORD WITH D.R. AT 78" A.F.F. | | | | | | | | | | | | | | | | | |
| 23 | 1 | VEGETABLE PEELING MACHINE | A | 60 LB. W/ DISPOSER AND STAND | 23A | 208 | 3 | 3.8 | J.B. | 24" | CONNECT TO PEELER | 23A | | | 2" | DIRECT | | | 8" | CONNECT TO DISPOSER BELOW PEELER | | | | | | | | |
| | | | | | 23B | 208 | 1 | 7.7 | J.B. | 24" | CONNECT TO DISPOSER BELOW PEELER | 23B | | 1/2" | | | | | 24" | CONNECT TO COMMON WATER CONNECTION ON PEELER/DISPOSER UNIT | | | | | | | | |
| 24 | 1 | WASTE PULPER | A | CLOSE-COUPLED PULPER & EXTRACTOR | 24A | 480 | 3 | 20.0 | J.B. | 60" | CONNECT TO WALL MOUNTED CONTROL PANEL & FROM CONTROL PANEL TO WASTE PULPER | 24A | | | 3" | 12" X 12" F.S. | | | S.U. | PROVIDE 3/4 GRATE AND EXTEND DRAIN LINE FROM DRAIN VALVE ON PULPER | | | | | | | | |
| | | | | | | | | | | | | 24B | | 1/2" | | | | | 18" | CONNECT TO PULPER. 60 G.P.H. REQUIRED AT 30 P.S.I. | | | | | | | | |
| | | | | | | | | | | | | 24C | 1/2" | | | | | | 18" | CONNECT TO PULPER. 60 G.P.H. REQUIRED AT 30 P.S.I. | | | | | | | | |
| 25 | 1 | FOOD PROCESSOR | C | | 25A | 120 | 1 | 10.0 | D.R. | 48" | | | | | | | | | | | | | | | | | | |
| 26 | 2 | POT RACKS | A | OVERHEAD RACK MOUNTED ON ITEM #21 | | | | | | | | | | | | | | | | | | | | | | | | |
| 27 | 1 | RANGE | A | 6 BURNER, HEAVY DUTY | 27A | 120 | 1 | 1.0 | D.R. | 24" | ELECTRONIC IGNITION | 27A | | | | | 3/4" | 250 | 30" | CONNECT TO GAS SUPPLY WITH FLEXIBLE CONNECTOR ASSEMBLY FURNISHED WITH EQUIPMENT. SEE DETAIL #A4/QF502 | | | | | | | | |

US Army Corps of Engineers
Norfolk District

| MARK | DATE | DESCRIPTION | BY | APP |
|---|---|---|---|---|

DESIGNED: JK
CHECKED: JK
DRAWN: JK,TJT
SUBMITTED: JK
DATE: 12/11/2009
SCALE: NONE
PROJECT NO. –
NORFOLK DISTRICT FILE NO. –
SPECIFICATION NO.
DRAWING NO. QF601
Last saved: 12-11-09
File name: QF601.DWG
Plot scale: 1:1

NORFOLK DISRTICT
CORPS OF ENGINEERS
NORFOLK, VIRGINIA

NAO
CENTER OF
STANDARDIZATION

US ARMY STANDARD DESIGN
500 SOLDIER PERMANENT PARTY
DINING FACILITY

FOOD SERVICE EQUIPMENT SCHEDULES

SHEET REFERENCE NUMBER
QF601
SHEET OF

| | | | | | ELECTRICAL SCHEDULE | | | | | | | PLUMBING SCHEDULE | | | | | | | | | VENTILATION SCHEDULE | | | | | | | |
|---|---|---|---|---|---|---|---|---|---|---|---|---|---|---|---|---|---|---|---|---|---|---|---|---|---|---|---|---|
| ITEM NUMBER | QTY. | DESCRIPTION | EQUIP. CLASS | COMMENTS | ELEC. SYMBOL | VOLTS | PHASE | AMPS | CONN. | HT. A.F.F. | REMARKS | PLUMBING SYMBOL | H.W. | C.W. | WASTE SIZE | WASTE TYPE | GAS | GAS MBTU | HT. A.F.F. | REMARKS | VENTILATION SYMBOL | QTY. | EXHAUST COLLAR | EXHAUST CFM | SUPPLY COLLAR | SUPPLY CFM | STATIC PRESSURE | HT. A.F.F. |
| 28 | 2 | BRAISING PANS | A | 40 GALLONS | 28A | 120 | 1 | 10.0 | D.R. | 18" | BRAISING PAN CONTROLS | 28A | | | | | 3/4" | 200 | 12" | CONNECT TO BRAISING PAN | | | | | | | | |
| 29 | 1 | CENTRAL PRESSURE CLEANING SYSTEM | A | | 29A | 208 | 1 | 9.0 | J.B. | 54" | CONNECT TO MASTER CONTROL PANEL FOR CENTRAL PRESSURE CLEANING SYSTEM (GFCI PROTECTION REQUIRED). ALSO EXTEND 24 VOLT CONTROL WIRING (FIVE CONDUCTOR, DOUBLE INSULATED) FROM MASTER CONTROL PANEL TO #29B REMOTE CONTROL PANELS (THREE PLACES). SEE DETAIL #A3/QF504 | 29A | 1/2" | | | | | | 18" | PROVIDE HOT AND COLD WATER HOSE BIBB. SEE DETAIL #A3/QF504 | | | | | | | |
| | | | | | 29B | | | | E.C. | 60" | EXTEND 24 VOLT CONTROL WIRING (FIVE CONDUCTOR, DOUBLE INSULATED) FROM MASTER CONTROL PANEL ON CENTRAL PRESSURE CLEANING SYSTEM AND CONNECT TO REMOTE CONTROL PANEL. SEE DETAIL #A3/QF504 | 29B | | 1/2" | | | | | 18" | PROVIDE HOT AND COLD WATER HOSE BIBB. SEE DETAIL #A3/QF504 | | | | | | | |
| | | | | | | | | | | | | 29C | | | 2" | F.F.D. | | | S.U. | EXTEND DRAIN LINE FROM BLEEDER VALVE LINE PRESSURE RELIEF VALVE. SEE DETAIL #A3/QF504 | | | | | | | | |
| | | | | | | | | | | | | 29D | | | | | | | 54" | EXTEND 3/8" STAINLESS STEEL HIGH PRESSURE WATER AND DETERGENT TUBING FROM CENTRAL PRESSURE CLEANING SYSTEM TO HOSE OUTLETS AT REMOTE STATIONS #29E (THREE PLACES). HIGH PRESSURE TUBING SHALL BE EXTENDED ABOVE FINISHED CEILING AND SHALL BE SECURED W/ CUSHIONED STRAPS 24" ON CENTER. SEE DETAIL #A3/QF504 | | | | | | | | |
| | | | | | | | | | | | | 29E | | | | | | | 60" | REMOTE OUTLET FOR CENTRAL PRESSURE CLEANING SYSTEM. EXTEND 3/8" STAINLESS STEEL HIGH PRESSURE WATER AND DETERGENT TUBING FROM #29D. SEE DETAIL #A3/QF504 | | | | | | | | |
| 30 | 2 | FLOOR TROUGHS W/ GRATE | A | | | | | | | | | 30A | | | 3" | DIRECT | | | S.U. | CONNECT TO RECESSED TROUGH IN FLOOR – SEE DETAIL #C3/QF503 | | | | | | | | |
| 31 | 1 | FREEZER | A | TWO SECTION, REACH-IN | 31A | 120 | 1 | 14.9 | J.B. | – | PROVIDE J.B. ABOVE CEILING & PENDANT CORD WITH D.R. AT 90" A.F.F. – NEMA #5-20P PLUG FURNISHED ON FREEZER | | | | | | | | | | | | | | | | | |
| 32 | 2 | CONVECTION OVENS | A | DOUBLE DECK | 32A | 120 | 1 | 6.0+6.0 | D.R. | 48" | OVEN FAN MOTORS | 32A | | | | | 3/4" | 120 | 30" | MANIFOLD TWO OVEN DECKS TOGETHER & CONNECT TO GAS SUPPLY WITH FLEXIBLE CONNECTOR ASSEMBLY FURNISHED WITH EQUIPMENT. SEE DETAIL #A4/QF502 | | | | | | | | |
| 32a | 1 | COMBINATION OVEN/STEAMER | A | ROLL-IN | 32aA | 120 | 1 | 15.0 | D.R. | 48" | | 32aA | | | | | 1" | 215 | 18" | CONNECT TO COMBINATION OVEN/STEAMER | | | | | | | | |
| | | | | | | | | | | | | 32aB | | 3/4" | | | | | 18" | CONNECT TO CONDENSER INLET, & THROUGH WATER FILTER TO STEAM GENERATOR INLET. 40-50 P.S.I. REQUIRED. WATER FILTER FURNISHED WITH EQUIPMENT & MOUNTED TO WALL AT 48" A.F.F. BACKFLOW PREVENTER REQUIRED. | | | | | | | | |
| | | | | | | | | | | | | 32aC | | | 2" | 12" X 12" F.S. | | | S.U. | EXTEND DRAIN LINE FROM COMBINATION OVEN/STEAMER | | | | | | | | |
| 33 | 2 | CAN OPENERS | C | | – | 120 | 1 | 1.2 | – | – | PLUGS INTO #17A & #21A | | | | | | | | | | | | | | | | | |
| 34 | 1 | MIXING MACHINE | A | 60 QUART | 34A | 208 | 3 | 10 | J.B. | – | PROVIDE J.B. ABOVE CEILING & PENDANT CORD WITH S.R. AT 78" A.F.F. ALSO FURNISH & INSTALL CORD & PLUG ON MIXER TO MATCH RECEPTACLE. | | | | | | | | | | | | | | | | | |
| 35 | 1 | MIXING MACHINE | C | 20 QUART | 35A | 120 | 1 | 8.2 | J.B. | – | PROVIDE J.B. ABOVE CEILING & PENDANT CORD WITH D.R. AT 78" A.F.F. | | | | | | | | | | | | | | | | | |
| 36 | 1 | KETTLE | A | 40 GALLON | 36A | 120 | 1 | 10.0 | D.R. | 18" | KETTLE CONTROLS | 36A | | | | | 3/4" | 140 | 18" | CONNECT TO KETTLE | | | | | | | | |
| | | | | | | | | | | | | 36B | | 1/2" | | | | | 36" | CONNECT TO FAUCET ON KETTLE | | | | | | | | |
| | | | | | | | | | | | | 36C | 1/2" | | | | | | 36" | CONNECT TO FAUCET ON KETTLE | | | | | | | | |
| 37 | 10 | SHELVING UNITS | C | STATIONARY SHELVING UNITS | | | | | | | | | | | | | | | | | | | | | | | | |
| 38 | 2 | KETTLES W/ STAND | A | (2) 6 GALLON SELF-CONTAINED KETTLES W/ STAND | 38A | 480 | 3 | 19.6 | J.B. | 24" | CONNECT TO KETTLES | 38A | | | 2" | 12" X 12" F.S. | | | S.U. | EXTEND DRAIN LINE FROM KETTLE STAND | | | | | | | | |
| | | | | | | | | | | | | 38B | | 1/2" | | | | | 24" | CONNECT TO FAUCET ON KETTLE STAND | | | | | | | | |
| | | | | | | | | | | | | 38C | 1/2" | | | | | | 24" | CONNECT TO FAUCET ON KETTLE STAND | | | | | | | | |
| 39 | 1 | EXHAUST HOOD – ISLAND TYPE | A | (4) UV TYPE EXHAUST HOOD SECTIONS | 39A | 120 | 1 | 15.0 | J.B. | 48" | PROVIDE SWITCH IN WALL AT 48" A.F.F. AND EXTEND CONDUIT & WIRING IN A CONCEALED MANNER TO J.B.'S ON TOP EXTERIOR OF HOOD SECTIONS FOR INCANDESCENT HOOD LIGHTS | | | | | | | | | | 39A | 4 | 10" X 25" | 3060 EA. | | | 1.60" | 108" |
| | | | | | 39B | 120 | 1 | 12.0 | E.C. | 104" | CONNECT TO UV CONTROL BOX ON TOP OF EXHAUST HOOD SECTION FOR UV LIGHTS (4 PLACES). SEE UV WIRING SCHEMATIC DETAIL #C1/QF503 | | | | | | | | | | 39B | 8 | | | 12" X 19" | 1,225 EA. | 0.20" | 108" |
| | | | | | 39C | 120 | 1 | 20.0 | E.C. | 60" | CONNECT TO UV CONTROL PANEL. ALSO PROVIDE CONTROL INTERWIRING FROM CONTROL PANEL TO UV CONTROL BOXES ON TOP OF EXHAUST HOOD SECTIONS, TO EXHAUST FAN, TO MAKE-UP AIR UNIT & TO FIRE SUPPRESSION SYSTEM – ITEM #41 AS REQUIRED. SEE UV WIRING SCHEMATIC DETAIL #C1/QF503 | | | | | | | | | | | | | | | | | |

US Army Corps of Engineers
Norfolk District

| MARK | DATE | DESCRIPTION | BY | APP |
|---|---|---|---|---|

DATE: 12/11/2009
SCALE: NONE
DESIGNED: JK
CHECKED: JK
DRAWN: JK,TJT
SUBMITTED: JK
PROJECT NO. –
NORFOLK DISTRICT FILE NO. –
SPECIFICATION NO. –
DRAWING NO. QF602
Last Revised: 12-2-09
File name: QF602.DWG
Plot scale: 1:1

NORFOLK DISRTICT
CORPS OF ENGINEERS
NORFOLK, VIRGINIA

NAO CENTER OF STANDARDIZATION

US ARMY STANDARD DESIGN
500 SOLDIER PERMANENT PARTY DINING FACILITY

FOOD SERVICE EQUIPMENT SCHEDULES

SHEET REFERENCE NUMBER
QF602
SHEET OF

| ITEM NUMBER | QTY. | DESCRIPTION | EQUIP. CLASS | COMMENTS | ELECTRICAL SCHEDULE: ELEC. SYMBOL | VOLTS | PHASE | AMPS | CONN. | HT. A.F.F. | REMARKS | PLUMBING SCHEDULE: PLUMBING SYMBOL | H.W. | C.W. | WASTE SIZE | WASTE TYPE | GAS | GAS MBTU | HT. A.F.F. | REMARKS | VENTILATION SCHEDULE: VENTILATION SYMBOL | QTY. | EXHAUST COLLAR | EXHAUST CFM | SUPPLY COLLAR | SUPPLY CFM | STATIC PRESSURE | HT. A.F.F. |
|---|---|---|---|---|---|---|---|---|---|---|---|---|---|---|---|---|---|---|---|---|---|---|---|---|---|---|---|---|
| 40 | 1 | FLOOR TROUGH W/ GRATE | A | | | | | | | | | 40A | | | 3" | DIRECT | | | S.U. | CONNECT TO RECESSED TROUGH IN FLOOR – SEE DETAIL #A1/QF503 | | | | | | | | |
| 41 | 1 | FIRE SUPPRESSION SYSTEM | A | SERVES EXHAUST HOOD #39 | 41A | 120 | 1 | 20.0 | J.B. | 96" | CONNECT TO MICROSWITCH ON WET CHEMICAL FIRE SUPPRESSION SYSTEM & RUN CONDUIT AND WIRE IN A CONCEALED MANNER TO FUEL AND POWER SHUT-OFF DEVICES FOR ALL APPLIANCES LOCATED UNDER THE EXHAUST HOOD. THIS SYSTEM SERVES ITEM #39. ALSO CONNECT TO BUILDING FIRE ALARM SYSTEM AS REQUIRED. | | | | | | | | | | | | | | | | | |
| | | | | | 41B | | | | J.B. | 48" | PROVIDE CONCEALED CONDUIT AND RECESSED JUNCTION BOX IN WALL FOR REMOTE MANUAL PULL STATION FOR FIRE SUPPRESSION SYSTEM. SEE DETAIL #A2/QF502 | | | | | | | | | | | | | | | | | |
| 42 | 1 | FRYERS & FILTER | A | BATTERY OF (3) 68 LB. FRYERS W/ FILTER SYSTEM | 42A | 120 | 1 | 1.0 + 1.0 | D.R. | 18" | FRYER CONTROLS FOR TWO FRYERS | 42A | | | | | 1" | 402 TOTAL | 30" | MANIFOLD 3 FRYERS TOGETHER & CONNECT TO GAS SUPPLY WITH FLEXIBLE CONNECTOR ASSEMBLY FURNISHED WITH EQUIPMENT. SEE DETAIL #A4/QF502 | | | | | | | | |
| | | | | | 42B | 120 | 1 | 1.0+5.6 | D.R. | 18" | FRYER CONTROLS FOR ONE FRYER & FILTER PUMP | | | | | | | | | | | | | | | | | |
| 43 | 1 | FRYERS | A | BATTERY OF (2) 68 LB. FRYERS | 43A | 120 | 1 | 1.0 + 1.0 | D.R. | 18" | FRYER CONTROLS FOR TWO FRYERS | 43A | | | | | 1" | 268 TOTAL | 30" | MANIFOLD 2 FRYERS TOGETHER & CONNECT TO GAS SUPPLY WITH FLEXIBLE CONNECTOR ASSEMBLY FURNISHED WITH EQUIPMENT. SEE DETAIL #A4/QF502 | | | | | | | | |
| 44 | 1 | FILTER STATION | A | CONNECTED TO ITEM #43 | 44A | 120 | 1 | 5.6 + 4.0 | D.R. | 18" | FILTER PUMP & HEAT LAMPS | | | | | | | | | | | | | | | | | |
| 45 | 2 | POT FILLER/SPRAY HOSE ASSEMBLIES | A | | | | | | | | | 45A | 1/2" | | | | | | 48" | CONNECT TO WALL MOUNTED FAUCET, INLETS 8" O.C. | | | | | | | | |
| | | | | | | | | | | | | 45B | | 1/2" | | | | | 48" | CONNECT TO WALL MOUNTED FAUCET, INLETS 8" O.C. | | | | | | | | |
| 46 | 1 | TABLE, BAKERS | C | | 46A | 120 | 1 | 15.0 | J.B. | – | PROVIDE J.B. ABOVE CEILING & PENDANT CORD WITH CONVENIENCE D.R. AT 78" A.F.F. | | | | | | | | | | | | | | | | | |
| 47 | 1 | STEAMER | A | W/(2) COMPARTMENTS, W/ (8) 2-1/2" DEEP PANS PER COMPARTMENT | 47A | 120 | 1 | 1.0 | J.B. | 18" | CONNECT TO STEAMER | 47A | | | 2" | 12" X 12" F.S. | | | S.U. | EXTEND DRAIN LINE FROM STEAMER | | | | | | | | |
| | | | | | | | | | | | | 47B | | | | | 1" | 300 | 12" | CONNECT TO STEAMER | | | | | | | | |
| | | | | | | | | | | | | 47C | | 3/4" | | | | | 18" | CONNECT TO CONDENSER INLET, & THROUGH WATER FILTER TO STEAM GENERATOR INLET. 35-60 P.S.I. REQUIRED. WATER FILTER FURNISHED WITH EQUIPMENT & MOUNTED TO WALL AT 48" A.F.F. BACKFLOW PREVENTER REQUIRED. | | | | | | | | |
| 48 | 7 | HAND SINKS | A | | | | | | | | | 48A | 1/2" | | | | | | 24" | CONNECT TO FAUCET | | | | | | | | |
| | | | | | | | | | | | | 48B | | | 1-1/2" | DIRECT | | | 20" | CONNECT TO SINK | | | | | | | | |
| | | | | | | | | | | | | 48C | | 1/2" | | | | | 24" | CONNECT TO FAUCET | | | | | | | | |
| 49 | 3 | INGREDIENT BINS, MOBILE | C | | | | | | | | | | | | | | | | | | | | | | | | | |
| 50 | 1 | UTENSIL WASHER | A | W/ BUILT-IN BOOSTER HEATER | 50A | 480 | 3 | 22.0 | J.B. | 24" | CONNECT TO UTENSIL WASHER | 50A | | | 3" | 12" X 12" F.S. | | | S.U. | EXTEND DRAIN LINES FROM UTENSIL WASHER AND FROM EXHAUST HOOD – ITEM #55 | | | | | | | | |
| | | | | | 50B | 480 | 3 | 34.0 | J.B. | 24" | CONNECT TO BOOSTER HEATER CONNECTION ON UTENSIL WASHER | 50B | 1" | | | | | | 12" | CONNECT TO UTENSIL WASHER. 140 DEGREES F. MIN. AT 20-22 P.S.I. REQUIRED | | | | | | | | |
| 51 | 1 | POT & PAN SINK | A | W/ RECIRCULATION UNIT ON WASH COMPARTMENT | 51A | 480 | 3 | 11.6 | J.B. | 18" | CONNECT TO POWER SOAK CONTROL PANEL | 51A | 3/4" | | | | | | 18" | CONNECT TO FAUCET | | | | | | | | |
| | | | | | | | | | | | | 51B | | 3/4" | | | | | 18" | CONNECT TO FAUCET | | | | | | | | |
| | | | | | | | | | | | | 51C | | | 2" | DIRECT | | | 15" | CONNECT DRAIN LINE TO 3 SINKS & EXTEND TO GREASE INTERCEPTOR AS REQ'D. | | | | | | | | |
| 51a | 1 | BOOSTER HEATER | A | TO HEAT WATER TO FILL RINSE COMPARTMENT | 51aA | 480 | 3 | 21.7 | J.B. | 12" | CONNECT TO BOOSTER HEATER | 51aA | 3/4" | | | | | | 18" | CONNECT TO BOOSTER HEATER. 140 DEGREES F. MIN. REQUIRED | | | | | | | | |
| | | | | | | | | | | | | 51aB | 3/4" | | | | | | 6" | H.W. OUTLET ON BOOSTER HEATER. CONNECT TO SINGLE PANTRY FAUCET OVER SANITIZING SINK COMPARTMENT WITH INSULATED LINE | | | | | | | | |
| | | | | | | | | | | | | 51aC | | | 2" | 12" X 12" F.S. | | | S.U. | EXTEND DRAIN LINES FROM BOOSTER HEATER, FROM SINK HEATER – ITEM #54 AND FROM EXHAUST HOOD – ITEM #53 | | | | | | | | |
| 52 | 4 | PRE-RINSE SPRAYS | A | | | | | | | | | 52A | | 3/4" | | | | | 18" | CONNECT TO FAUCET & DISPOSER | | | | | | | | |
| | | | | | | | | | | | | 52B | 1/2" | | | | | | 18" | CONNECT TO FAUCET | | | | | | | | |
| | | | | | | | | | | | | 52C | | 1/2" | | | | | 18" | CONNECT TO FAUCET | | | | | | | | |
| 53 | 1 | EXHAUST HOOD | A | CONDENSATE HOOD OVER RINSE COMPARTMENT | | | | | | | | – | | | 1/2" | INDIRECT | | | 80" | EXTEND CONDENSATE DRAIN LINE FROM EXHAUST HOOD TO F.S. #51aC | 53A | 1 | 7" X 7" | 600 | | | 0.25" | 108" |
| 54 | 1 | SINK HEATER | A | TO MAINTAIN HEAT IN RINSE COMPARTMENT | 54A | 208 | 3 | 25.0 | J.B. | 12" | CONNECT TO SINK HEATER | | | | | | | | | | | | | | | | | |
| 55 | 1 | EXHAUST HOOD | A | CONDENSATE HOOD OVER UTENSIL WASHER | | | | | | | | – | | | 1/2" | INDIRECT | | | 96" | EXTEND CONDENSATE DRAIN LINE FROM EXHAUST HOOD TO F.S. #50A | 55A | 1 | 8" X 8" | 750 | | | 0.25" | 124" |

US Army Corps of Engineers
Norfolk District

| MARK | DESCRIPTION | DATE | BY | APP |
|---|---|---|---|---|

DESIGNED: JK | CHECKED: JK | DATE: 12/11/2009
DRAWN: JK,TJT | SUBMITTED: JK | SCALE: NONE
PROJECT NO. – | NORFOLK DISTRICT FILE NO. – | SPECIFICATION NO. –
DRAWING NO. QF603
Last Revised on 2-24-09
File name QF603.DWG
Plot scale: 1:1

NORFOLK DISRTICT
CORPS OF ENGINEERS
NORFOLK, VIRGINIA

NAO CENTER OF STANDARDIZATION

US ARMY STANDARD DESIGN
500 SOLDIER PERMANENT PARTY DINING FACILITY

FOOD SERVICE EQUIPMENT SCHEDULES

SHEET REFERENCE NUMBER
QF603
SHEET OF

| ITEM NUMBER | QTY. | DESCRIPTION | EQUIP. CLASS | COMMENTS | ELECTRICAL SCHEDULE: ELEC. SYMBOL | VOLTS | PHASE | AMPS | CONN. | HT. A.F.F. | REMARKS | PLUMBING SCHEDULE: PLUMBING SYMBOL | H.W. | C.W. | WASTE SIZE | WASTE TYPE | GAS | GAS MBTU | HT. A.F.F. | REMARKS | VENTILATION SCHEDULE: VENTILATION SYMBOL | QTY. | EXHAUST COLLAR | EXHAUST CFM | SUPPLY COLLAR | SUPPLY CFM | STATIC PRESSURE | HT. A.F.F. |
|---|---|---|---|---|---|---|---|---|---|---|---|---|---|---|---|---|---|---|---|---|---|---|---|---|---|---|---|---|
| 56 | 7 | POT & PAN RACKS | C | | | | | | | | | | | | | | | | | | | | | | | | | |
| 56a | 1 | MIXER ACCESSORY RACK | C | | | | | | | | | | | | | | | | | | | | | | | | | |
| 57 | 3 | CASHIER STATIONS | A | | | | | | | | | | | | | | | | | | | | | | | | | |
| 58 | 2 | COLD PANS (5 WELLS) | A | | 58A | 120 | 1 | 10.7 | D.R. | 4" | | 58A | | | 2" | F.F.D. | | | S.U. | EXTEND DRAIN LINES FROM COLD PAN, DRAIN VALVE ON HOT FOOD WARMER – ITEM #110 AND FROM DRAIN VALVES ON TWO SOUP WELLS – ITEM #59 | | | | | | | | |
| | | | | | | | | | | | | 58B | | | 2" | F.F.D. | | | S.U. | EXTEND DRAIN LINES FROM TWO COLD PANS | | | | | | | | |
| 59 | 2 | SOUP WELLS, DROP-IN | A | | 59A | 120 | 1 | 6.9+6.9 | J.B. | S.U. | CONNECT TO TWO SOUP WELLS | – | | | 3/4" | INDIRECT | | | 23" | EXTEND DRAIN LINE FROM DRAIN VALVE TO #58A | | | | | | | | |
| 60 | 2 | BREAD CABINETS | A | | 60A | 120 | 1 | 1.0 | D.R. | 48" | | | | | | | | | | | | | | | | | | |
| | | | | | 60B | 120 | 1 | 1.0 | D.R. | 4" | | | | | | | | | | | | | | | | | | |
| 61 | 16 | DISH DISPENSERS, DROP-IN | A | | | | | | | | | | | | | | | | | | | | | | | | | |
| 62 | 8 | PLATE DISPENSERS | C | | 62A | 120 | 1 | 10.0 | D.R. | 24" | CONVENIENCE RECEPTACLE | | | | | | | | | | | | | | | | | |
| 63 | 1 | COLD PAN (4 WELLS) | A | | 63A | 120 | 1 | 7.8 | D.R. | 4" | | – | | | 3/4" | INDIRECT | | | 23" | EXTEND DRAIN LINE TO #58B | | | | | | | | |
| 64 | 5 | SNEEZE GUARDS | A | | 64A | 120 | 1 | 6.0 | J.B. | 4" | CONNECT TO FLUORESCENT LIGHTS IN (3) SNEEZE GUARDS | | | | | | | | | | | | | | | | | |
| | | | | | 64B | 120 | 1 | 5.0 | J.B. | 4" | CONNECT TO FLUORESCENT LIGHTS IN (2) SNEEZE GUARDS | | | | | | | | | | | | | | | | | |
| 65 | 1 | SALAD BAR COUNTER | A | | | | | | | | | | | | | | | | | | | | | | | | | |
| 66 | 1 | HOT FOOD WARMER (6 WELLS) | A | | 66A | 208 | 1 | 24.5 | S.R. | 4" | NEMA #L6-50P PLUG FURNISHED ON EQUIPMENT | 66A | | | 2" | F.F.D. | | | S.U. | EXTEND DRAIN LINE FROM DRAIN VALVE ON HOT FOOD WARMER | | | | | | | | |
| | | | | | | | | | | | | 66B | 1/2" | | | | | | S.U. | CONNECT TO FILL FAUCET | | | | | | | | |
| 67 | 6 | COUNTER PROTECTORS | A | | 67A | 120 | 1 | 3.0 | J.B. | 4" | CONNECT TO FLUORESCENT LIGHTS IN COUNTER PROTECTOR | | | | | | | | | | | | | | | | | |
| 68 | 1 | ENTREE COUNTER | A | | 68A | 120 | 1 | 10.0+10.0 | J.B. | 4" | CONNECT TO J.B. IN BASE FOR 2 P.W. CONVENIENCE D.R.'S IN COUNTER | | | | | | | | | | | | | | | | | |
| 69 | 2 | GRIDDLES | A | | | | | | | | | 69A | | | | | 3/4" | 120 | S.U. | EXTEND GAS PIPING UP TO HEIGHT OF CONNECTION ON GRIDDLE AND CONNECT TO GAS SUPPLY WITH FLEXIBLE CONNECTOR ASSEMBLY FURNISHED WITH EQUIPMENT. SEE DETAIL #A1/QF504 | | | | | | | | |
| 70 | 2 | GRIDDLE STANDS | A | | | | | | | | | | | | | | | | | | | | | | | | | |
| 70a | 2 | SPLASH GUARDS | A | | | | | | | | | | | | | | | | | | | | | | | | | |
| 71 | 2 | EXHAUST HOODS – ISLAND TYPE | A | UV TYPE | 71A | 120 | 1 | 4.0 TOTAL | J.B. | 48" | PROVIDE SWITCH IN WALL AT 48" A.F.F. AND EXTEND CONDUIT & WIRING IN A CONCEALED MANNER TO J.B.'S ON TOP EXTERIOR OF BOTH HOODS OVER GRIDDLES FOR INCANDESCENT HOOD LIGHTS | | | | | | | | | | 71A | 2 | 10" X 17" | 2,100 EA. | | | 1.60" | 108" |
| | | | | | 71B | 120 | 1 | 6.0 | E.C. | 104" | CONNECT TO UV CONTROL BOX ON TOP OF EXHAUST HOOD FOR UV LIGHTS. SEE UV WIRING SCHEMATIC DETAIL #C1/QF503 | | | | | | | | | | 71B | 2 | | | 12" X 24" | 1,680 EA. | 0.20" | 108" |
| | | | | | 71C | 120 | 1 | 20.0 | E.C. | 60" | CONNECT TO UV CONTROL PANEL. ALSO PROVIDE CONTROL INTERWIRING FROM CONTROL PANEL TO UV CONTROL BOXES ON TOP OF EXHAUST HOODS #71, #71a & #139 (FOUR HOODS), TO EXHAUST FAN(S), TO MAKE-UP AIR UNIT(S) & TO FIRE SUPPRESSION SYSTEM – ITEM #140 AS REQUIRED. SEE UV WIRING SCHEMATIC DETAIL #_____ | | | | | | | | | | | | | | | | | |
| 71a | 1 | EXHAUST HOOD – WALL TYPE | A | UV TYPE | 71aA | 120 | 1 | 2.0 | J.B. | 48" | PROVIDE SWITCH IN WALL AT 48" A.F.F. AND EXTEND CONDUIT & WIRING IN A CONCEALED MANNER TO J.B. ON TOP EXTERIOR OF EXHAUST HOOD FOR INCANDESCENT HOOD LIGHTS | | | | | | | | | | 71aA | 1 | 10" X 12" | 1,530 | | | 1.60" | 108" |
| | | | | | 71aB | 120 | 1 | 6.0 | J.B. | 108" | CONNECT TO UV CONTROL BOX ON TOP OF EXHAUST HOOD FOR UV LIGHTS. SEE UV WIRING SCHEMATIC DETAIL #C1/QF503 | | | | | | | | | | 71aB | 1 | 12" X 24" | 1,225 | | | 0.20" | 108" |
| 72 | – | NOT USED | – | | | | | | | | | | | | | | | | | | | | | | | | | |
| 73 | 1 | PASS THRU HEATED CABINET | A | TWO SECTION REACH-IN | 73A | 120/208 | 1 | 19.8 | J.B. | 88" | CONNECT TO PASS-THRU HEATED CABINET | | | | | | | | | | | | | | | | | |
| 74 | 2 | PASTRY STORAGE CABINETS | C | | | | | | | | | | | | | | | | | | | | | | | | | |
| 75 | 1 | DESSERT COUNTER | A | | 75A | 120 | 1 | 10.0 | J.B. | 4" | CONNECT TO J.B. IN BASE FOR P.W. CONVENIENCE D.R. IN COUNTER | | | | | | | | | | | | | | | | | |
| | | | | | 75B | 120 | 1 | 10.0 | D.R. | 48" | CONVENIENCE RECEPTACLE | | | | | | | | | | | | | | | | | |
| 76 | 1 | COLD PAN (3 WELLS) | A | | 76A | 120 | 1 | 6.0 | D.R. | 4" | | 76A | | | 2" | F.F.D. | | | S.U. | EXTEND DRAIN LINE FROM COLD PAN | | | | | | | | |
| 77 | 1 | DOUBLE DECK DISPLAY STAND | A | | 77A | 120 | 1 | 4.0 | J.B. | 18" | CONNECT TO FLUORESCENT LIGHTS IN DOUBLE DECK DISPLAY | | | | | | | | | | | | | | | | | |
| 78 | 1 | PASS THRU REFRIGERATOR | A | TWO SECTION REACH-IN | 78A | 120 | 1 | 11.0 | D.R. | 88" | | | | | | | | | | | | | | | | | | |
| 79 | 2 | TOASTERS | C | | 79A | 208 | 1 | 24.0 | S.R. | 4" | VERIFY ELECTRICAL REQUIREMENTS W/ GOVERNMENT FURNISHED EQUIPMENT | | | | | | | | | | | | | | | | | |
| 80 | 1 | BEVERAGE COUNTER W/ TROUGH | A | IN SERVING AREA | | | | | | | | 80A | | | 2" | F.F.D. | | | S.U. | EXTEND DRAIN LINE FROM TROUGH IN COUNTER | | | | | | | | |
| 81 | 1 | BEVERAGE COUNTER W/ TROUGHS | A | IN DINING ROOM | | | | | | | | – | | | | INDIRECT | | | 32" | EXTEND DRAIN LINES FROM TWO DRIP TROUGHS TO #84B | | | | | | | | |
| 82 | 2 | JUICE DISPENSERS | C | BULK JUICE DISPENSERS | 82A | 120 | 1 | 15.0 | D.R. | 18" | | – | | 1/2" | | | | | 34" | CONNECT C.W. FROM #99A | | | | | | | | |
| | | | | | 82B | 120 | 1 | 15.0 | D.R. | 4" | | – | | 1/2" | | | | | 34" | CONNECT C.W. FROM #84A | | | | | | | | |

US Army Corps of Engineers
Norfolk District

| MARK | DATE | DESCRIPTION | BY | APP. |
|---|---|---|---|---|

DESIGNED: JK | CHECKED: JK | DATE: 12/11/2009
DRAWN: JK, TJT | SUBMITTED: JK | SCALE: NONE
PROJECT NO. – | NORFOLK DISTRICT FILE NO. –
DRAWING NO. QF604 | SPECIFICATION NO. –
Last Revised on: Oct-09 | Plot scale: 1:1
File name: QF604.DWG

NORFOLK DISRTICT
CORPS OF ENGINEERS
NORFOLK, VIRGINIA

NAO CENTER OF STANDARDIZATION

US ARMY STANDARD DESIGN
500 SOLDIER PERMANENT PARTY DINING FACILITY

FOOD SERVICE EQUIPMENT SCHEDULES

SHEET REFERENCE NUMBER
QF604
SHEET OF

| | | | | | ELECTRICAL SCHEDULE | | | | | | | PLUMBING SCHEDULE | | | | | | | | | VENTILATION SCHEDULE | | | | | | | |
|---|---|---|---|---|---|---|---|---|---|---|---|---|---|---|---|---|---|---|---|---|---|---|---|---|---|---|---|---|
| ITEM NUMBER | QTY. | DESCRIPTION | EQUIP. CLASS | COMMENTS | ELEC. SYMBOL | VOLTS | PHASE | AMPS | CONN. | HT. A.F.F. | REMARKS | PLUMBING SYMBOL | H.W. | C.W. | WASTE SIZE | WASTE TYPE | GAS | GAS MBTU | HT. A.F.F. | REMARKS | VENTILATION SYMBOL | QTY. | EXHAUST COLLAR | EXHAUST CFM | SUPPLY COLLAR | SUPPLY CFM | STATIC PRESSURE | HT. A.F.F. |
| 83 | 1 | SANDWICH UNIT | A | | 83A | 120 | 1 | 6.3 | D.R. | 4" | | | | | | | | | | | | | | | | | | |
| 84 | 1 | ICE AND SODA DISPENSER | L | MANUAL LOAD ICE DISPENSER W/ SODA VALVES | 84A | 120 | 1 | 15.0 | F.R. | 4" | ICE AND SODA DISPENSER AND CARBONATOR IN BASE OF COUNTER. VERIFY ELECTRICAL REQUIREMENTS W/ VENDOR FURNISHED EQUIPMENT | 84A | | 3/4" | | | | | S.U. | CONNECT TO CARBONATOR IN BASE OF COUNTER, JUICE DISPENSER – ITEM #82, TEA BREWER – ITEM #85, COFFEE BREWER – ITEM #95 AND TO CAPPUCCINO DISPENSER – ITEM #99. BACKFLOW PREVENTER REQUIRED ON CONNECTION TO CARBONATOR. | | | | | | | | |
| | | | | | | | | | | | | 84B | | | | F.F.D. | | | S.U. | EXTEND DRAIN LINES FROM ICE AND SODA DISPENSER AND FROM TWO DRIP TROUGHS IN BEVERAGE COUNTER – ITEM #81 | | | | | | | | |
| 85 | 1 | TEA BREWER | L | | 85A | 120 | 1 | 15.0 | D.R. | 4" | VERIFY ELECTRICAL REQUIREMENTS W/ VENDOR FURNISHED EQUIPMENT | – | | 1/2" | | | | | 34" | CONNECT C.W. FROM #84A | | | | | | | | |
| 86 | 1 | MICROWAVE OVEN | C | | 86A | 120 | 1 | 15.0 | D.R. | 4" | | | | | | | | | | | | | | | | | | |
| 87 | 2 | MILK DISPENSERS | C | | 87A | 120 | 1 | 2.7 | D.R. | 48" | | – | | | | | | | | | | | | | | | | |
| | | | | | 87B | 120 | 1 | 2.7 | D.R. | 4" | | | | | | | | | | | | | | | | | | |
| 88 | 6 | CUP & GLASS RACK DISPENSERS | C | | | | | | | | | | | | | | | | | | | | | | | | | |
| 89 | 1 | BREAD COUNTER | A | | 89A | 120 | 1 | 10.0 | D.R. | 48" | CONVENIENCE RECEPTACLE | | | | | | | | | | | | | | | | | |
| 90 | 1 | DISPLAY REFRIGERATOR | A | | 90A | 120 | 1 | 10.4 | D.R. | 86" | | | | | | | | | | | | | | | | | | |
| 91 | 2 | FLOOR TROUGHS W/ GRATE | A | | | | | | | | | 91A | | | 2" | DIRECT | | | S.U. | CONNECT TO RECESSED TROUGH IN FLOOR – SEE DETAIL #D4/QF501 | | | | | | | | |
| 92 | 2 | ICE MAKING MACHINES | A | | 92A | 208 | 3 | 12.8 | J.B. | 76" | CONNECT TO ICE MACHINE, AND FROM ICE MACHINE TO REMOTE CONDENSER ON BUILDING ROOF | 92A | | | 2" | F.F.D. | | | S.U. | EXTEND DRAIN LINES FROM ICE MAKER AND ICE BIN | | | | | | | | |
| | | | | | | | | | | | | 92B | | 1/2" | | | | | 60" | CONNECT TO WATER FILTER & FROM WATER FILTER TO ICE MACHINE. BACKFLOW PREVENTER REQUIRED. | | | | | | | | |
| 93 | 1 | CEREAL DISPLAY RACK | L | | | | | | | | | | | | | | | | | | | | | | | | | |
| 94 | 1 | BULK CO2 TANK | L | | | | | | | | | | | | | | | | | | | | | | | | | |
| 95 | 1 | COFFEE BREWER | A | SATELLITE BREWER W/ (2) 3 GALLON REMOVABLE DISPENSERS | 95A | 120/208 | 3 | 38.3 | J.B. | 4" | CONNECT TO COFFEE BREWER | – | | 1/2" | | | | | 34" | CONNECT C.W. FROM #84A | | | | | | | | |
| 96 | 1 | COFFEE URN | A | TWIN 6 GALLON CAPACITY, FIELD FEEDING AREA | 96A | 120/208 | 1 | 36.0 | J.B. | 48" | CONNECT TO COFFEE URN | 96A | | 1/2" | | | | | 48" | CONNECT TO COFFEE URN | | | | | | | | |
| 97 | 1 | URN STAND | A | FIELD FEEDING AREA | | | | | | | | 97A | | | | | | | | NOT USED | | | | | | | | |
| 98 | 1 | BULK JUICE DISPENSER | L | FIELD FEEDING AREA | 98A | 120 | 1 | 10.0 | D.R. | 24" | VERIFY ELECTRICAL REQUIREMENTS W/ VENDOR FURNISHED EQUIPMENT | | | | | | | | | | | | | | | | | |
| 99 | 2 | CAPPUCCINO DISPENSERS | L | | 99A | 120 | 1 | 15.0 | D.R. | 48" | VERIFY ELECTRICAL REQUIREMENTS W/ VENDOR FURNISHED EQUIPMENT | 99A | | 1/2" | | | | | 18" | CONNECT TO CAPPUCCINO DISPENSER AND TO JUICE DISPENSER – ITEM #82 | | | | | | | | |
| | | | | | 99B | 120 | 1 | 15.0 | D.R. | 4" | VERIFY ELECTRICAL REQUIREMENTS W/ VENDOR FURNISHED EQUIPMENT | – | | 1/2" | | | | | 34" | CONNECT TO CAPPUCCINO DISPENSER AND TO JUICE DISPENSER – CONNECT C.W. FROM #84A | | | | | | | | |
| 100 | 1 | ICE CREAM CABINET | L | | 100A | 120 | 1 | 10.0 | D.R. | 24" | VERIFY ELECTRICAL REQUIREMENTS W/ VENDOR FURNISHED EQUIPMENT | | | | | | | | | | | | | | | | | |
| 101 | 1 | SOILED TRAY CONVEYOR | A | | 101A | 120 | 1 | 15.0 | J.B. | 24" | CONNECT TO CONTROL PANEL & FROM CONTROL PANEL TO CONVEYOR MOTOR | 101A | | | 2" | F.F.D. | | | | EXTEND DRAIN LINES FROM CONVEYOR BED AND RECESS BELOW ROLLERS | | | | | | | | |
| 102 | 1 | RACK SHELF | A | | | | | | | | | | | | | | | | | | | | | | | | | |
| 103 | 2 | SILVERWARE SOAK SINKS | C | | | | | | | | | | | | | | | | | | | | | | | | | |
| 104 | 1 | DISHWASHING MACHINE | A | | 104A | 480 | 3 | 47.6 | J.B. | 66" | CONNECT TO CONTROL PANEL ON TOP OF DISHWASHER | 104A | | | 2" | F.F.D. | | | S.U. | EXTEND DRAIN LINES FROM SIDE LOADER AND FROM RECESS BELOW ROLLERS ON SOILED TRAY CONVEYOR – ITEM #101 | | | | | | | | |
| | | | | | 104B | 120 | 1 | 10.0 | D.R. | 66" | DETERGENT DISPENSER BY VENDOR | 104B | 3/4" | | | | | | 12" | 180 DEGREES F. MIN. H.W. INLET ON DISHWASHER. CONNECT FROM BOOSTER HEATER H.W. OUTLET #105A WITH INSULATED LINE | | | | | | | | |
| | | | | | | | | | | | | 104C | | | 3" | 12" X 12" F.S. | | | S.U. | EXTEND DRAIN LINES FROM DISHWASHER, FROM CLEAN DISH TABLE – ITEM #106 AND FROM DRAIN VALVE AND TEMPERATURE/PRESSURE RELIEF VALVE ON BOOSTER HEATER – ITEM #105 | | | | | | | | |
| 105 | 1 | BOOSTER HEATER | A | FOR DISHWASHER | 105A | 480 | 3 | 21.7 | J.B. | 18" | CONNECT TO BOOSTER HEATER | 105A | 3/4" | | | | | | 6" | 180 DEGREES F. MIN. H.W. OUTLET ON BOOSTER HEATER. CONNECT TO H.W. INLET #104B ON DISHWASHER WITH INSULATED LINE | | | | | | | | |
| | | | | | | | | | | | | 105B | 3/4" | | | | | | 12" | CONNECT TO BOOSTER HEATER. (140 DEGREES F. MIN.) 132 G.P.H. AT 20 P.S.I. FLOW PRESSURE REQUIRED | | | | | | | | |
| | | | | | | | | | | | | – | | | (2) 3/4" | INDIRECT | | | 4"/22" | EXTEND DRAIN LINES FROM DRAIN VALVE AND TEMPERATURE/PRESSURE RELIEF VALVE TO #104C | | | | | | | | |
| 106 | 1 | CLEAN DISH TABLE | A | | | | | | | | | – | | | 1–1/2" | INDIRECT | | | 34" | EXTEND DRAIN LINE TO #104C | | | | | | | | |
| 107 | 2 | VENT DUCT EXTENSIONS | A | | | | | | | | | | | | | | | | | | 107A | 1 | 4" X 16" | 400 | | | | 6" ABOVE CEILING |
| | | | | | | | | | | | | | | | | | | | | | 107B | 1 | 4" X 16" | 200 | | | | 6" ABOVE CEILING |
| 108 | 2 | RACK DOLLIES | C | | | | | | | | | | | | | | | | | | | | | | | | | |
| 109 | 2 | SERVICE SINKS (FLOOR MOUNTED) | A | | | | | | | | | 109A | | 1/2" | | | | | 36" | CONNECT TO FAUCET, INLETS 8" O.C. | | | | | | | | |
| | | | | | | | | | | | | 109B | | | 3" | DIRECT | | | S.U. | CONNECT TO SINK | | | | | | | | |
| | | | | | | | | | | | | 109C | 1/2" | | | | | | 36" | CONNECT TO FAUCET, INLETS 8" O.C. | | | | | | | | |

US Army Corps of Engineers
Norfolk District

| MARK | DATE | DESCRIPTION | BY | APP |
|---|---|---|---|---|

DATE: 12/11/2009
SCALE: NONE
CHECKED: JK
SUBMITTED: JK
NORFOLK DISTRICT FILE NO. —
SPECIFICATION NO. —
DESIGNED: JK
DRAWN: JK, TJT
PROJECT NO. —
DRAWING NO. QF605
Last Revised: 12-11-09
File name: QF605.DWG
Plot scale: 1:1

NORFOLK DISRTICT
CORPS OF ENGINEERS
NORFOLK, VIRGINIA

NAO CENTER OF STANDARDIZATION

US ARMY STANDARD DESIGN
500 SOLDIER PERMANENT PARTY DINING FACILITY

FOOD SERVICE EQUIPMENT SCHEDULES

SHEET REFERENCE NUMBER
QF605
SHEET OF

| ITEM NUMBER | QTY. | DESCRIPTION | EQUIP. CLASS | COMMENTS | ELECTRICAL SCHEDULE: ELEC. SYMBOL | VOLTS | PHASE | AMPS | CONN. | HT. A.F.F. | REMARKS | PLUMBING SCHEDULE: PLUMBING SYMBOL | H.W. | C.W. | WASTE SIZE | WASTE TYPE | GAS | GAS MBTU | HT. A.F.F. | REMARKS | VENTILATION SCHEDULE: VENTILATION SYMBOL | QTY. | EXHAUST COLLAR | EXHAUST CFM | SUPPLY COLLAR | SUPPLY CFM | STATIC PRESSURE | HT. A.F.F. |
|---|---|---|---|---|---|---|---|---|---|---|---|---|---|---|---|---|---|---|---|---|---|---|---|---|---|---|---|---|
| 110 | 1 | HOT FOOD WARMER (3 WELLS) | A | | 110A | 208 | 1 | 12.3 | S.R. | 4" | NEMA #L6-20P PLUG FURNISHED ON HOT FOOD WARMER | – | | | 3/4" | INDIRECT | | | 25" | EXTEND DRAIN LINE TO #58A | | | | | | | | |
| 111 | 1 | FOOD BAR COUNTER | A | | | | | | | | | | | | | | | | | | | | | | | | | |
| 112 | 1 | WORK COUNTER | A | | 112A | 120 | 1 | 10.0 | D.R. | 48" | CONVENIENCE RECEPTACLE | 112A | | | 2" | 12" X 12" F.S. | | | S.U. | EXTEND DRAIN LINE FROM SINK | | | | | | | | |
| | | | | | | | | | | | | 112B | | 1/2" | | | | | 18" | CONNECT TO FAUCET | | | | | | | | |
| | | | | | | | | | | | | 112C | 1/2" | | | | | | 18" | CONNECT TO FAUCET | | | | | | | | |
| 113 | 1 | CLEAN/SANITIZING MACHINE | C | | 113A | 120 | 1 | 15.0 | D.R. | 18" | LOCATED NEAR FAUCET HOSE STATIONS – ITEM #9 AND SERVICE SINKS – ITEM #109 (4 PLACES) | | | | | | | | | | | | | | | | | |
| 114 | 2 | DISH CARTS | C | | | | | | | | | | | | | | | | | | | | | | | | | |
| 115 | 2 | PULP CONTAINERS | C | | | | | | | | | | | | | | | | | | | | | | | | | |
| 116 | 1 | WALL MOUNTED FLAT SHELF | A | | | | | | | | | | | | | | | | | | | | | | | | | |
| 117 | 6 | TRAY DISPENSERS | C | | | | | | | | | | | | | | | | | | | | | | | | | |
| 118 | 6 | BREAD RACKS | L | | | | | | | | | | | | | | | | | | | | | | | | | |
| 119 | 1 | PROOFING CABINET | C | | 119A | 120 | 1 | 16.6 | J.B. | – | PROVIDE J.B. ABOVE CEILING & PENDANT CORD WITH D.R. AT 78" A.F.F. | | | | | | | | | | | | | | | | | |
| 120 | 8 | SYRUP BOX RACKS | L | | 120A | 120 | 1 | 10.0 | D.R. | 24" | CONVENIENCE RECEPTACLE | | | | | | | | | | | | | | | | | |
| 121 | – | NOT USED | – | | | | | | | | | | | | | | | | | | | | | | | | | |
| 122 | 4 | OPEN RACKS | C | | | | | | | | | | | | | | | | | | | | | | | | | |
| 123 | 1 | UTENSIL TABLE | A | | | | | | | | | | | | | | | | | | | | | | | | | |
| 124 | 4 | UTILITY CARTS | C | | | | | | | | | | | | | | | | | | | | | | | | | |
| 125 | 1 | COOK & HOLD CABINET | A | | 125A | 208 | 1 | 28.8 | J.B. | – | PROVIDE J.B. ABOVE CEILING & PENDANT CORD WITH S.R. AT 78" A.F.F. ALSO FURNISH & INSTALL CORD & PLUG ON CABINET TO MATCH RECEPTACLE. | | | | | | | | | | | | | | | | | |
| 126 | 1 | PREP SINK | A | | 126A | 120 | 1 | 15.0 | J.B. | – | PROVIDE J.B. ABOVE CEILING & PENDANT CORD WITH CONVENIENCE D.R. AT 78" A.F.F. | 126A | 3/4" | | | | | | S.U. | CONNECT TO FAUCET AND TO FAUCET ON ITEM #21 – TABLE W/ SINK | | | | | | | | |
| | | | | | | | | | | | | 126B | | 3/4" | | | | | S.U. | CONNECT TO FAUCET AND TO FAUCET ON ITEM #21 – TABLE W/ SINK | | | | | | | | |
| | | | | | | | | | | | | 126C | | | 3" | 12" X 12" F.S. | | | S.U. | EXTEND DRAIN LINES FROM TWO SINKS AND FROM SINK ON ITEM #21 – TABLE W/ SINK | | | | | | | | |
| 127 | 1 | CARVING STATION W/ HOLDING CABINET | A | | 127A | 120 | 1 | 8.6 | D.R. | 24" | | | | | | | | | | | | | | | | | | |
| 128 | – | NOT USED | – | | | | | | | | | | | | | | | | | | | | | | | | | |
| 129 | 1 | GRILL/ACTION STATION | A | | 129A | 120 | 1 | 10.0 + 10.0 | J.B. | 4" | CONNECT TO J.B. IN BASE FOR 2 P.W. CONVENIENCE D.R.'S IN COUNTER | | | | | | | | | | | | | | | | | |
| 130 | 1 | COLD PAN (2 WELLS) | A | | 130A | 120 | 1 | 6.0 | D.R. | 4" | | 130A | | | 2" | F.F.D. | | | S.U. | EXTEND DRAIN LINE FROM COLD PAN | | | | | | | | |
| 131 | 2 | HOT FOOD WARMER (4 WELLS) | A | | 131A | 208 | 1 | 16.3 | S.R. | 4" | NEMA #L6-30P PLUG FURNISHED ON HOT FOOD WARMER | 131A | | | 2" | F.F.D. | | | S.U. | EXTEND DRAIN LINE FROM DRAIN VALVE ON HOT FOOD WARMER | | | | | | | | |
| | | | | | | | | | | | | 131B | 1/2" | | | | | | S.U. | CONNECT TO FILL FAUCET | | | | | | | | |
| 132 | 1 | ROTISSERIE OVEN W/ VENTLESS HOOD | A | | 132A | 208 | 3 | 34.0 | S.R. | 24" | ROTISSERIE OVEN AND VENTLESS HOOD. PROVIDE CORD AND PLUG W/ MATCHING RECEPTACLE | | | | | | | | | | | | | | | | | |
| | | | | | 132B | 120 | 1 | 14.6 | D.R. | 24" | NEMA #5-20P PLUG FURNISHED ON HEATED HOLDING CABINET | | | | | | | | | | | | | | | | | |
| 133 | 1 | WORK COUNTER | A | | 133A | 120 | 1 | 10.0 | D.R. | 48" | CONVENIENCE RECEPTACLE | 133A | | 1/2" | | | | | 18" | CONNECT TO FAUCET | | | | | | | | |
| | | | | | | | | | | | | 133B | | | 2" | 12" X 12" F.S. | | | S.U. | EXTEND DRAIN LINE FROM SINK | | | | | | | | |
| | | | | | | | | | | | | 133C | 1/2" | | | | | | 18" | CONNECT TO FAUCET | | | | | | | | |
| 134 | 1 | GRILL COUNTER | A | | 134A | 120 | 1 | 10.0 + 10.0 | J.B. | 4" | CONNECT TO J.B. IN BASE FOR 2 P.W. CONVENIENCE D.R.'S IN COUNTER | | | | | | | | | | | | | | | | | |
| 135 | 1 | PASS THRU FREEZER | A | | 135A | 120 | 1 | 11.9 | D.R. | 88" | | | | | | | | | | | | | | | | | | |
| 136 | 1 | WORK COUNTER | A | | 136A | 120 | 1 | 10.0 | D.R. | 48" | CONVENIENCE RECEPTACLE | | | | | | | | | | | | | | | | | |
| 137 | 1 | PIZZA ASSEMBLY TABLE | A | | 137A | 120 | 1 | 15.0 | D.R. | 18" | | | | | | | | | | | | | | | | | | |
| 138 | 1 | CONVEYOR PIZZA OVEN | A | DOUBLE DECK | 138A | 208 | 1 | 29.0 | J.B. | 48" | CONNECT TO CONVEYOR PIZZA OVEN | | | | | | | | | | | | | | | | | |
| 139 | 1 | EXHAUST HOOD – WALL TYPE | A | UV TYPE | 139A | 120 | 1 | 1.0 | J.B. | 48" | PROVIDE SWITCH IN WALL AT 48" A.F.F. AND EXTEND CONDUIT & WIRING IN A CONCEALED MANNER TO J.B. ON TOP EXTERIOR OF EXHAUST HOOD FOR INCANDESCENT HOOD LIGHTS | | | | | | | | | | 139A | 1 | 10" X 8" | 1,020 | | | 1.60" | 108" |
| | | | | | 139B | 120 | 1 | 6.0 | J.B. | 108" | CONNECT TO UV CONTROL BOX ON TOP OF EXHAUST HOOD FOR UV LIGHTS. SEE UV WIRING SCHEMATIC DETAIL #C1/QF503 | | | | | | | | | | 139B | 1 | | | 12" X 15" | 815 | 0.20" | 108" |
| 140 | 1 | FIRE SUPPRESSION SYSTEM | A | SERVES EXHAUST HOODS #71, 71a & #139 | 140A | 120 | 1 | 20.0 | J.B. | 96" | CONNECT TO MICROSWITCH ON WET CHEMICAL FIRE SUPPRESSION SYSTEM & RUN CONDUIT AND WIRE IN A CONCEALED MANNER TO FUEL AND POWER SHUT-OFF DEVICES FOR ALL APPLIANCES LOCATED UNDER THE EXHAUST HOODS. THIS SYSTEM SERVES ITEMS #71, #71a AND #139. ALSO CONNECT TO BUILDING FIRE ALARM SYSTEM AS REQUIRED. | | | | | | | | | | | | | | | | | |
| | | | | | 140B | | | | J.B. | 48" | PROVIDE CONCEALED CONDUIT AND RECESSED JUNCTION BOX IN WALL FOR REMOTE MANUAL PULL STATION FOR FIRE SUPPRESSION SYSTEM. SEE DETAIL #A2/QF502 | | | | | | | | | | | | | | | | | |
| 141 | 1 | PIZZA OVEN COUNTER | A | | 141A | 120 | 1 | 10.0 | D.R. | 48" | CONVENIENCE RECEPTACLE | | | | | | | | | | | | | | | | | |
| 142 | 1 | REFRIGERATOR | A | ONE SECTION REACH-IN | 142A | 120 | 1 | 8.0 | D.R. | 86" | | | | | | | | | | | | | | | | | | |

US Army Corps of Engineers
Norfolk District

| MARK | DATE | DESCRIPTION | BY | APP |
|---|---|---|---|---|

DATE: 12/11/2009
SCALE: NONE
CHECKED: JK
SUBMITTED: JK
NORFOLK DISTRICT FILE NO. –
SPECIFICATION NO. –
DESIGNED: JK
DRAWN: JK, TJT
PROJECT NO. –
DRAWING NO. QF606
Last Revised: 12-11-09
File name: QF506.DWG
Plot scale: 1:1

NORFOLK DISRTICT
CORPS OF ENGINEERS
NORFOLK, VIRGINIA

NAO CENTER OF STANDARDIZATION

US ARMY STANDARD DESIGN
500 SOLDIER PERMANENT PARTY DINING FACILITY

FOOD SERVICE EQUIPMENT SCHEDULES

SHEET REFERENCE NUMBER
QF606
SHEET OF

| ITEM NUMBER | QTY. | DESCRIPTION | EQUIP. CLASS | COMMENTS | ELECTRICAL SCHEDULE: ELEC. SYMBOL | VOLTS | PHASE | AMPS | CONN. | HT. A.F.F. | REMARKS | PLUMBING SCHEDULE: PLUMBING SYMBOL | H.W. | C.W. | WASTE SIZE | WASTE TYPE | GAS | GAS MBTU | HT. A.F.F. | REMARKS | VENTILATION SCHEDULE: VENTILATION SYMBOL | QTY. | EXHAUST COLLAR | EXHAUST CFM | SUPPLY COLLAR | SUPPLY CFM | STATIC PRESSURE | HT. A.F.F. |
|---|---|---|---|---|---|---|---|---|---|---|---|---|---|---|---|---|---|---|---|---|---|---|---|---|---|---|---|---|
| 143 | 1 | PIZZA WARMING SHELF | A | | 143A | 120 | 1 | 12.0 | D.R. | 4" | | | | | | | | | | | | | | | | | | |
| 144 | 1 | PIZZA AND DELI COUNTER | A | | 144A | 120 | 1 | 10.0 + 10.0 | J.B. | 4" | CONNECT TO J.B. IN BASE FOR 2 P.W. CONVENIENCE D.R.'S IN COUNTER | | | | | | | | | | | | | | | | | |
| 145 | 1 | SOFT SERVE MACHINE | A | | 145A | 208 | 3 | 14.0 | J.B. | 4" | PROVIDE CORD, PLUG AND MATCHING RECEPTACLE & CONNECT TO LEFT CONNECTION ON MACHINE | 145A | 1/2" | | | | | | S.U. | PROVIDE FLEXIBLE HOSE W/ QUICK DISCONNECT & CONNECT TO FAUCET ON SOFT SERVE MACHINE | | | | | | | | |
| | | | | | 145B | 208 | 3 | 13.0 | J.B. | 4" | PROVIDE CORD, PLUG AND MATCHING RECEPTACLE & CONNECT TO RIGHT CONNECTION ON MACHINE | 145B | | 1/2" | | | | | S.U. | PROVIDE FLEXIBLE HOSE W/ QUICK DISCONNECT & CONNECT TO FAUCET ON SOFT SERVE MACHINE | | | | | | | | |
| 146 | 1 | REFRIGERATOR | A | ONE SECTION REACH-IN | 146A | 120 | 1 | 8.0 | D.R. | 86" | | | | | | | | | | | | | | | | | | |
| 147 | 4 | POS MACHINES | C | | 147A | 120 | 1 | 10.0 | D.R. | 18" | DEDICATED CIRCUIT REQUIRED. ALSO PROVIDE NETWORK CONNECTION | | | | | | | | | | | | | | | | | |
| | | | | | 147B | 120 | 1 | 10.0 | D.R. | 4" | DEDICATED CIRCUIT REQUIRED. ALSO PROVIDE NETWORK CONNECTION | | | | | | | | | | | | | | | | | |
| 148 TO 151 NOT USED | | | | | | | | | | | | | | | | | | | | | | | | | | | | |
| 152 | 1 | WASTE COOKING OIL STORAGE TANK | A | | 152A | 120 | 1 | 20.0 | D.R. | 18" | | 152A | | | | | | | 42" | PLUMB. SEC. TO FURNISH AND INSTALL 3/4" BLACK IRON OR GALVANIZED PIPING (NOT COPPER) FROM WASTE COOKING OIL STORAGE TANK TO REMOTE QUICK CONNECT FITTING - SEE DETAIL #B1/QF504. | | | | | | | | |
| 153 | 1 | WASTE COOKING OIL CADDY | A | | | | | | | | | | | | | | | | | | | | | | | | | |
| 154 | 1 | WORK TABLE | A | | 154A | 120 | 1 | 10.0 | D.R. | 48" | CONVENIENCE RECEPTACLE | 154A | | 1/2" | | | | | 18" | CONNECT TO FAUCET | | | | | | | | |
| | | | | | | | | | | | | 154B | | | 2" | 12"X12" F.S. | | | S.U. | EXTEND DRAIN LINE FROM SINK | | | | | | | | |
| | | | | | | | | | | | | 154C | 1/2" | | | | | | 18" | CONNECT TO FAUCET | | | | | | | | |
| 155 | 1 | CAN CRUSHER | A | | 155A | 120 | 1 | 20.0 | D.R. | 48" | | | | | | | | | | | | | | | | | | |
| 156 | 4 | RECYCLING BINS | C | | | | | | | | | | | | | | | | | | | | | | | | | |
| CARRY OUT AREA | | | | | | | | | | | | | | | | | | | | | | | | | | | | |
| C1 | 1 | HAND SINK | A | | | | | | | | | C1A | | 1/2" | | | | | 24" | CONNECT TO FAUCET | | | | | | | | |
| | | | | | | | | | | | | C1B | | | 1-1/2" | DIRECT | | | 20" | CONNECT TO SINK | | | | | | | | |
| | | | | | | | | | | | | C1C | 1/2" | | | | | | 24" | CONNECT TO FAUCET | | | | | | | | |
| C2 | 4 | SHELVING UNITS | C | 18" X 48" MOBILE SHELVING UNITS | | | | | | | | | | | | | | | | | | | | | | | | |
| C3 | 1 | WORK TABLE W/ SINK | A | | C3A | 120 | 1 | 10.0 | D.R. | 48" | CONVENIENCE RECEPTACLE | C3A | | 1/2" | | | | | 18" | CONNECT TO FAUCET | | | | | | | | |
| | | | | | | | | | | | | C3B | | | 2" | 12" X 12" F.S. | | | S.U. | EXTEND DRAIN LINE FROM SINK | | | | | | | | |
| | | | | | | | | | | | | C3C | 1/2" | | | | | | 18" | CONNECT TO FAUCET | | | | | | | | |
| C4 | 1 | HEATED CABINET | A | PORTABLE | C4A | 120 | 1 | 16.0 | D.R. | 24" | NEMA #5-20P PLUG FURNISHED ON HEATED CABINET | | | | | | | | | | | | | | | | | |
| C5 | 1 | FOOD WARMER, DRAWER TYPE | A | MOUNTED ON ELEVATED SHELF | C5A | 208 | 1 | 17.3 | S.R. | 56" | NEMA #L6-30P PLUG FURNISHED ON FOOD WARMER | | | | | | | | | | | | | | | | | |
| C6 | 1 | CONVEYOR TOASTER & STAND | C | | C6A | 208 | 1 | 16.0 | S.R. | 24" | NEMA #6-20P PLUG FURNISHED ON CONVEYOR TOASTER. VERIFY ELECT. REQUIREMENTS WITH GOVERNMENT FURNISHED EQUIPMENT. | | | | | | | | | | | | | | | | | |
| C7 | 1 | WORK TABLE | A | | C7A | 120 | 1 | 10.0 | D.R. | 48" | CONVENIENCE RECEPTACLE | C7A | | | 2" | F.F.D. | | | S.U. | EXTEND DRAIN LINE FROM DRIP TROUGH IN TABLE | | | | | | | | |
| C8 | 2 | SANDWICH REFRIGERATORS | A | | C8A | 120 | 1 | 6.3 | D.R. | 18" | | | | | | | | | | | | | | | | | | |
| C9 | 1 | MICROWAVE OVEN | C | MOUNTED ON ELEVATED SHELF | C9A | 120 | 1 | 15.0 | D.R. | 56" | | | | | | | | | | | | | | | | | | |
| C10 | 1 | EXHAUST HOOD - ISLAND TYPE | A | (1) SECTION UV TYPE | C10A | 120 | 1 | 4.0 | J.B. | 48" | PROVIDE SWITCH IN WALL AT 48" A.F.F. AND EXTEND CONDUIT & WIRING IN A CONCEALED MANNER TO J.B. ON TOP EXTERIOR OF HOOD FOR INCANDESCENT HOOD LIGHTS | | | | | | | | | | C10A | 1 | 10" X 29" | 3,570 | | | 1.60" | 108" |
| | | | | | C10B | 120 | 1 | 12.0 | E.C. | 104" | CONNECT TO UV CONTROL BOX ON TOP OF EXHAUST HOOD SECTION FOR UV LIGHTS. SEE UV WIRING SCHEMATIC DETAIL #C1/QF503 | | | | | | | | | | C10B | 2 | | | 12" X 24" | 1,430 EA. | 0.20" | 108" |
| | | | | | C10C | 120 | 1 | 20.0 | E.C. | 60" | CONNECT TO UV CONTROL PANEL. ALSO PROVIDE CONTROL INTERWIRING FROM CONTROL PANEL TO UV CONTROL BOX ON TOP OF EXHAUST HOOD, TO EXHAUST FAN, TO MAKE-UP AIR UNIT & TO FIRE SUPPRESSION SYSTEM - ITEM #C11 AS REQUIRED. SEE UV WIRING SCHEMATIC DETAIL #C1/QF503 | | | | | | | | | | | | | | | | | | |
| C11 | 1 | FIRE SUPPRESSION SYSTEM | A | SERVES EXHAUST HOOD #C10 | C11A | 120 | 1 | 20.0 | J.B. | 96" | CONNECT TO MICROSWITCH ON WET CHEMICAL FIRE SUPPRESSION SYSTEM & RUN CONDUIT AND WIRE IN A CONCEALED MANNER TO FUEL AND POWER SHUT-OFF DEVICES FOR ALL APPLIANCES LOCATED UNDER THE EXHAUST HOOD. THIS SYSTEM SERVES ITEM #C10. | | | | | | | | | | | | | | | | | |
| | | | | | C11B | | | | J.B. | 48" | PROVIDE CONCEALED CONDUIT AND RECESSED JUNCTION BOX IN WALL FOR REMOTE MANUAL PULL STATION FOR FIRE SUPPRESSION SYSTEM. SEE DETAIL #A2/QF502 | | | | | | | | | | | | | | | | | |
| C12 | 2 | FRYERS W/ FILTER | A | | C12A | 120 | 1 | 1.0 + 1.0 | D.R. | 18" | FRYER CONTROLS | C12A | | | | | 1" | 268 TOTAL | 30" | MANIFOLD 2 FRYERS TOGETHER & CONNECT TO GAS SUPPLY WITH FLEXIBLE CONNECTOR ASSEMBLY FURNISHED WITH EQUIPMENT. SEE DETAIL #A4/QF502 | | | | | | | | |
| | | | | | C12B | 120 | 1 | 5.6 + 4.0 | D.R. | 18" | FILTER PUMP & HEAT LAMPS | | | | | | | | | | | | | | | | | |

US Army Corps of Engineers
Norfolk District

| SYMBOL | DESCRIPTION | DATE | APP. |
|---|---|---|---|
| | | | BY |

DATE: 12/11/2009
SCALE: NONE
CHECKED: JK
SUBMITTED: JK
NORFOLK DISTRICT FILE NO. —
SPECIFICATION NO. —
DESIGNED: JK
DRAWN: JK,TJT
PROJECT NO. —
DRAWING NO. QF607
Last Revised: 12-11-09
File name: QF607.DWG
Plot scale: 1:1

NORFOLK DISRTICT
CORPS OF ENGINEERS
NORFOLK, VIRGINIA

NAO CENTER OF STANDARDIZATION

US ARMY STANDARD DESIGN
500 SOLDIER PERMANENT PARTY DINING FACILITY

FOOD SERVICE EQUIPMENT SCHEDULES

SHEET REFERENCE NUMBER
QF607
SHEET OF

| | | | | | ELECTRICAL SCHEDULE | | | | | | | PLUMBING SCHEDULE | | | | | | | | | VENTILATION SCHEDULE | | | | | | | |
|---|---|---|---|---|---|---|---|---|---|---|---|---|---|---|---|---|---|---|---|---|---|---|---|---|---|---|---|---|
| ITEM NUMBER | QTY. | DESCRIPTION | EQUIP. CLASS | COMMENTS | ELEC. SYMBOL | VOLTS | PHASE | AMPS | CONN. | HT. A.F.F. | REMARKS | PLUMBING SYMBOL | H.W. | C.W. | WASTE SIZE | WASTE TYPE | GAS | GAS MBTU | HT. A.F.F. | REMARKS | VENTILATION SYMBOL | QTY. | EXHAUST COLLAR | EXHAUST CFM | SUPPLY COLLAR | SUPPLY CFM | STATIC PRESSURE | HT. A.F.F. |
| C13 | 1 | GRIDDLE & STAND | A | | | | | | | | | C13A | | | | | 3/4" | 120 | 30" | CONNECT TO GAS SUPPLY WITH FLEXIBLE CONNECTOR ASSEMBLY FURNISHED WITH EQUIPMENT. SEE DETAIL #A4/QF502 | | | | | | | | |
| C14 | 1 | BREAD RACK | L | | | | | | | | | | | | | | | | | | | | | | | | | |
| C15 | 2 | POS MACHINES | C | | C15A | 120 | 1 | 10.0 | D.R. | 48" | DEDICATED CIRCUIT REQUIRED. ALSO PROVIDE NETWORK CONNECTION | | | | | | | | | | | | | | | | | |
| | | | | | C15B | 120 | 1 | 10.0 | D.R. | 4" | DEDICATED CIRCUIT REQUIRED. ALSO PROVIDE NETWORK CONNECTION | | | | | | | | | | | | | | | | | |
| C16 | 1 | SERVING COUNTER | A | | C16A | 120 | 1 | 10.0 + 10.0 | J.B. | 18" | CONNECT TO J.B. IN BASE FOR 2 P.W. CONVENIENCE D.R.'S IN COUNTER | C16A | | | 2" | F.F.D. | | | S.U. | EXTEND DRAIN LINES FROM TWO TROUGHS IN COUNTER, FROM DRAIN VALVE ON HOT FOOD WARMER – ITEM #C19 AND FROM ICE AND SODA DISPENSER – ITEM #C38 | | | | | | | | |
| | | | | | C16B | 120 | 1 | 10.0 | J.B. | 4" | CONNECT TO J.B. IN BASE FOR P.W. CONVENIENCE D.R. IN COUNTER | | | | | | | | | | | | | | | | | |
| C17 | 1 | COMBINATION OVEN/STEAMER | A | SINGLE COMPARTMENT, (5) 13" X 18" SHEET PANS OR (5) 12" X 20" X 2 1/2" DEEP PANS | C17A | 208 | 3 | 26.0 | J.B. | 30" | CONNECT TO COMBINATION OVEN/STEAMER | C17A | | | 2" | 12" X 12" F.S. | | | S.U. | EXTEND DRAIN LINE FROM COMBINATION OVEN/STEAMER | | | | | | | | |
| | | | | | | | | | | | | C17B | | 3/4" | | | | | 30" | CONNECT THROUGH WALL-MOUNTED WATER FILTER TO COMBINATION OVEN/STEAMER. 40-50 P.S.I. REQUIRED. WATER FILTER FURNISHED WITH EQUIPMENT & MOUNTED TO WALL AT 48" A.F.F. BACKFLOW PREVENTER REQUIRED. | | | | | | | | |
| C18 | – | NOT USED | – | | | | | | | | | | | | | | | | | | | | | | | | | |
| C19 | 1 | HOT FOOD WARMER (4 WELLS) | A | | C19A | 208 | 1 | 16.3 | S.R. | 4" | NEMA #L6-30P PLUG FURNISHED ON FOOD WARMER | – | | | 3/4" | INDIRECT | | | 25" | EXTEND DRAIN LINE TO #C16A | | | | | | | | |
| | | | | | | | | | | | | C19A | 1/2" | | | | | | S.U. | CONNECT TO FILL FAUCET | | | | | | | | |
| C20 | 2 | COUNTER PROTECTORS | A | | C20A | 120 | 1 | 3.0 | J.B. | 4" | CONNECT TO FLUORESCENT LIGHTS IN COUNTER PROTECTOR | | | | | | | | | | | | | | | | | |
| | | | | | C20B | 120 | 1 | | J.B. | 18" | CONNECT TO FLUORESCENT LIGHTS IN COUNTER PROTECTOR | | | | | | | | | | | | | | | | | |
| C21 | 1 | DISPLAY FREEZER | A | TWO SECTION, REACH-IN | C21A | 120 | 1 | 14.9 | D.R. | 86" | NEMA #5-20P PLUG FURNISHED ON DISPLAY FREEZER | | | | | | | | | | | | | | | | | |
| C22 | 1 | DISPLAY REFRIGERATOR | A | TWO SECTION, REACH-IN | C22A | 120 | 1 | 10.4 | D.R. | 86" | | | | | | | | | | | | | | | | | | |
| C23 | 4 | CUP/LID DISPENSERS | A | | | | | | | | | | | | | | | | | | | | | | | | | |
| C24 | 2 | COFFEE BREWERS | L | | C24A | 120/208 | 1 | 30.0 | J.B. | 48" | CONNECT TO COFFEE BREWER. VERIFY ELECTRICAL REQUIREMENTS W/ VENDOR FURNISHED EQUIPMENT | C24A | | 1/2" | | | | | 48" | CONNECT TO COFFEE BREWER | | | | | | | | |
| | | | | | C24B | 120/208 | 1 | 30.0 | J.B. | 4" | CONNECT TO COFFEE BREWER. VERIFY ELECTRICAL REQUIREMENTS W/ VENDOR FURNISHED EQUIPMENT | | | | | | | | | | | | | | | | | |
| C25 | 2 | CONDIMENT RACKS | C | | | | | | | | | | | | | | | | | | | | | | | | | |
| C26 | 1 | BASKET COUNTER | A | | C26A | 120 | 1 | 10.0 | D.R. | 48" | CONVENIENCE RECEPTACLE | | | | | | | | | | | | | | | | | |
| C27 | – | NOT USED | – | | C27A | | | | | | NOT USED | | | | | | | | | | | | | | | | | |
| C28 | 1 | WRAPPING COUNTER | A | | C28A | 120 | 1 | 10.0 | D.R. | 48" | CONVENIENCE RECEPTACLE | | | | | | | | | | | | | | | | | |
| C29 | 1 | BEVERAGE/CASHIER COUNTER | A | | C29A | 120 | 1 | 10.0 | D.R. | 48" | CONVENIENCE RECEPTACLE | | | | | | | | | | | | | | | | | |
| C30 | 1 | REFRIGERATOR, REACH-IN | A | TWO SECTION REACH-IN | C30A | 120 | 1 | 10.4 | D.R. | 86" | | | | | | | | | | | | | | | | | | |
| C31 | 1 | FREEZER, REACH-IN | A | TWO SECTION REACH-IN | C31A | 120 | 1 | 14.9 | D.R. | 86" | NEMA #5-20P PLUG FURNISHED ON FREEZER | | | | | | | | | | | | | | | | | |
| C32 | 1 | WORK TABLE | C | | C32A | 120 | 1 | 10.0 | D.R. | 48" | CONVENIENCE RECEPTACLE | | | | | | | | | | | | | | | | | |
| C33 | 2 | REFRIGERATORS, REACH-IN | A | ONE SECTION REACH-IN | C33A | 120 | 1 | 8.0 | D.R. | 86" | | | | | | | | | | | | | | | | | | |
| C34 | 1 | TRASH BIN | C | | | | | | | | | | | | | | | | | | | | | | | | | |
| C35 | 1 | ANGLE RACK | C | | | | | | | | | | | | | | | | | | | | | | | | | |
| C36 | 1 | UTILITY CART | C | | | | | | | | | | | | | | | | | | | | | | | | | |
| C37 | 1 | FREEZER, REACH-IN | A | ONE SECTION REACH-IN | C37A | 120 | 1 | 11.5 | D.R. | 18" | | | | | | | | | | | | | | | | | | |
| C38 | 1 | ICE AND SODA DISPENSER | L | MANUAL LOAD ICE DISPENSER W/ SODA VALVES | C38A | 120 | 1 | 15.0 | F.R. | 4" | ICE AND SODA DISPENSER AND CARBONATOR IN BASE OF COUNTER. VERIFY ELECTRICAL REQUIREMENTS W/ VENDOR FURNISHED EQUIPMENT | C38A | | 3/4" | | | | | S.U. | CONNECT TO CARBONATOR IN BASE OF COUNTER, COFFEE BREWER – ITEM #C24, TEA BREWER – ITEM #C40 AND TO JUICE DISPENSER – ITEM #C41. BACKFLOW PREVENTER REQUIRED ON CONNECTION TO CARBONATOR. | | | | | | | | |
| C39 | – | NOT USED | – | | | | | | | | | | | | | | | | | | | | | | | | | |
| C40 | 2 | TEA BREWERS | L | | C40A | 120 | 1 | 15.0 | D.R. | 48" | VERIFY ELECTRICAL REQUIREMENTS W/ VENDOR FURNISHED EQUIPMENT | | | | | | | | | | | | | | | | | |
| | | | | | C40B | 120 | 1 | 15.0 | D.R. | 4" | VERIFY ELECTRICAL REQUIREMENTS W/ VENDOR FURNISHED EQUIPMENT | | | | | | | | | | | | | | | | | |
| C41 | 2 | JUICE DISPENSERS, CONCENTRATE | L | | C41A | 120 | 1 | 15.0 | D.R. | 48" | VERIFY ELECTRICAL REQUIREMENTS W/ VENDOR FURNISHED EQUIPMENT | | | | | | | | | | | | | | | | | |
| | | | | | C41B | 120 | 1 | 15.0 | D.R. | 4" | VERIFY ELECTRICAL REQUIREMENTS W/ VENDOR FURNISHED EQUIPMENT | | | | | | | | | | | | | | | | | |
| C42 | 1 | SYRUP BOX SHELVING UNIT | L | | | | | | | | | C42A | | | 2" | F.D. | | | S.U. | | | | | | | | | |
| C43 | 1 | ICE/SODA DISPENSER | L | | C43A | 120 | 1 | 15.0 | F.R. | 18" | TRANSFORMER FOR SODA DISPENSING HEADS AND CARBONATOR IN BASE OF COUNTER. VERIFY ELECTRICAL REQUIREMENTS W/ VENDOR FURNISHED EQUIPMENT | C43A | | | F.F.D. | | | | S.U. | EXTEND DRAIN LINE FROM ICE AND SODA DISPENSER | | | | | | | | |
| | | | | | | | | | | | | C43B | | 1/2" | | | | | 18" | CONNECT TO CARBONATOR IN BASE OF COUNTER, TO TEA BREWER – ITEM #C40 AND TO JUICE DISPENSER – ITEM #C41. BACKFLOW PREVENTER REQUIRED ON CONNECTION TO CARBONATOR. | | | | | | | | |

US Army Corps of Engineers
Norfolk District

| MARK | DATE | DESCRIPTION | BY | APP |
|---|---|---|---|---|

DATE: 12/11/2009
SCALE: NONE
CHECKED: JK
SUBMITTED: JK
NORFOLK DISTRICT FILE NO. —
SPECIFICATION NO. —
DESIGNED: JK
DRAWN: JK, TJT
PROJECT NO. —
DRAWING NO. QF608
Last revised: 12-11-09
File name: QF608.DWG
Plot scale: 1:1

NORFOLK DISRTICT
CORPS OF ENGINEERS
NORFOLK, VIRGINIA

NAO CENTER OF STANDARDIZATION

US ARMY STANDARD DESIGN
500 SOLDIER PERMANENT PARTY DINING FACILITY

FOOD SERVICE EQUIPMENT SCHEDULES

SHEET REFERENCE NUMBER
QF608
SHEET OF