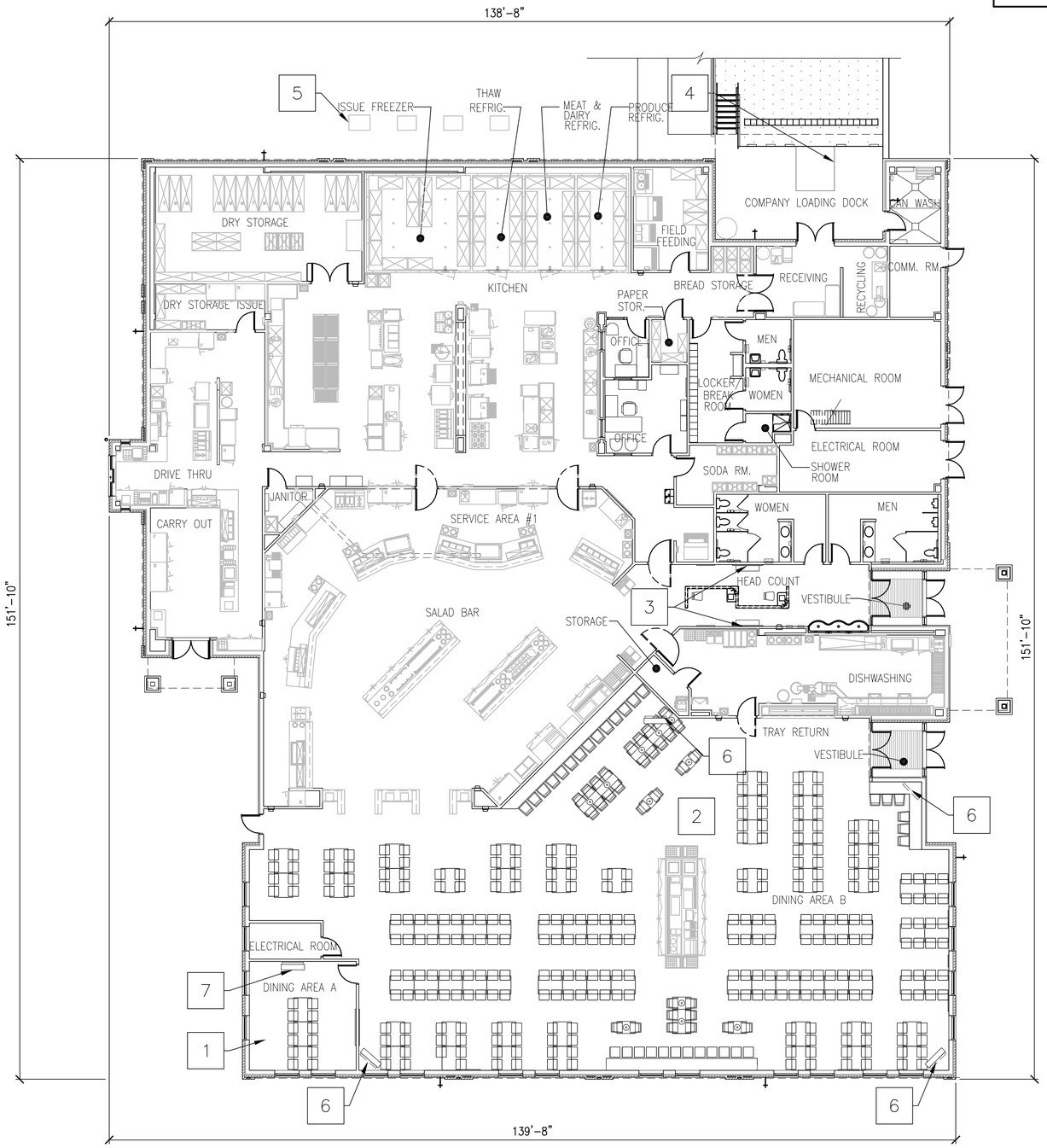

PLAN NORTH

OVERALL FLOOR PLAN

3/32" = 1'-0"

GRAPHIC SCALE(S)

3/32" = 1'-0" 0 5' 10' 20' 40'

GENERAL NOTES

1. FLOOR PLAN INDICATES THE PREFERRED SOLUTION IN SCHEMATIC FORM ONLY. PROPOSER IS ALLOWED TO MAKE ADJUSTMENTS FOR EXTERIOR FACADE/ARCHITECTURAL THEME AND/OR TO ACCOMODATE SPECIFIC BUILDING ENGINEERING SYSTEMS (STRUCTURAL, MECHANICAL, FIRE PROTECTION ETC.). THESE ADJUSTMENTS, AS WELL AS ANY FUNCTIONAL DEVIATIONS PROPOSED, WILL BE EVALUATED BY THE CENTER OF STANDARDIZATION FOR THIS FACILITY DURING THE SOURCE SELECTION EVALUATION BOARD.

2. AREAS SHOWN ON THE NET AREA COMPUTATION ARE TO BE CONSIDERED NET PROGRAM REQUIREMENTS. THE MAXIMUM GROSS SQUARE FOOTAGE ALLOWABLE FOR THIS CONTRACT IS IDENTIFIED IN SECTION 01 10 00 PARAGRAPH 2 OF THE RFP. A REDUCED OVERALL GROSS AREA IS ACCEPTALE IF ALL NET PROGRAM REQUIREMENTS AND ADJACENCIES ARE MET.

NOTES

1. DINING AREA 'A', 3 TABLES = 12 SEATS
2. DINING AREA 'B', 87 TABLES = 355 SEATS
3. FLAT PANEL TV MENU BOARD.
4. DOCK LEVELER.
5. FREEZER AND REFRIGERATION UNITS (MAY BE PLACED ON ROOF OR, AS AN ALTERNATIVE, IN UNOBSTRUCTED SPACE ONLY WHEN APPROVED BY THE INSTALLATION). THE LOCATION OF THE UNITS MAY VARY. SITE ADAPT AE TO COORDINATE LOCATION PER ATFP, CIVIL, AND FOOD SERVICE REQUIREMENTS.
6. CEILING MOUNTED FLAT PANEL TELEVISION.
7. WALL MOUNTED FLAT PANEL TELEVISION.

NET AREA COMPUTATIONS

SPACE	501–800 PERSON
	FT^2
KITCHEN	2,275
DINING (AREAS A & B)	5,722
SERVING	2,969
DISHWASHING	599
RECEIVING VESTIBULE	180
PUBLIC TOILETS	408
STAFF TOILETS/ LOCKERS	334
JANITOR	44
VESTIBULE (2)	166
QUEUING	330
OFFICES (2)	232
REF./FREEZER	799
FIELD FEEDING	251
DRY STORAGE	625
BREAD STORAGE	82
NON FOOD STORAGE (2)	96
SODA ROOM	134
CARRY–OUT PREPARATION	556
CARRY–OUT SERVING	445
CARRY–OUT STORAGE	137
CAN/CART WASH	103
MECHANICAL	434
ELECTRICAL (2)	332
COMM	98
TOTAL NET AREA	17,351

GROSS AREA COMPUTATIONS

SPACE	501–800 PERSON
	FT^2
BUILDING	18,610
LOADING DOCK	212
CANOPIES	228
TOTAL	19,050

NOTE:

SQUARE FOOTAGE CALCULATED IAW UFC 3–100–10 PARA 2–15.3

US Army Corps of Engineers
Norfolk District

MARK	DATE	DESCRIPTION	BY	APP

DESIGNED: JH
DRAWN: SS
CHECKED: RTB
SUBMITTED: JH
DATE: 12/11/09
SCALE: AS NOTED
NORFOLK DISTRICT FILE NO. –
SPECIFICATION NO. –
PROJECT NO. –
DRAWING NO. AE101
Last saved by: ssurendhranath
Plot scale: 1:1
File name: AE101.DWG

NORFOLK DISTRICT
CORPS OF ENGINEERS
NORFOLK, VIRGINIA

NAO CENTER OF STANDARDIZATION

US ARMY STANDARD DESIGN
800 SOLDIER PERMANENT PARTY DINING FACILITY

OVERALL FLOOR PLAN

SHEET REFERENCE NUMBER
AE101
SHEET OF

H:\PJ\3285\CAD–Stripdown–DFAC\CAD–800SPP\Sheets\A\AE101.dwg Fri, 18 Dec 2009 – 2:56pm ssurendhranath

WALK-IN NOTES

1. SEE DETAIL #B1/QF501 FOR INSULATED FLOOR DETAIL.

2. CENTER LINE OF BREAKER STRIP IN FLOOR.

3. RUN DRAIN LINE EXPOSED IN FREEZER AND REFRIGERATORS, BEHIND SHELVING, AND EXTEND DOWN INTO FUNNEL OF FLOOR DRAIN. PROVIDE "P" TRAP OUTSIDE WALK-IN COMPARTMENT.

4. PROVIDE SLEEVES FOR DRAIN LINE IN WALLS OF WALK-IN AND IN BUILDING WALL AT CORRECT HEIGHT FOR PROPER DRAINAGE. CAULK ALL SLEEVES.

5. ALL ELECTRICAL CONNECTIONS FOR WALK-INS INCLUDING WIRING TO ALL EVAPORATORS, VAPOR-PROOF LIGHTS, DOOR HEATERS, THRESHOLD HEATERS, TIME CLOCKS, HEATED PRESSURE RELIEF PORT, WIRING FROM FREEZER EVAPORATOR TO ROOM THERMOSTAT, AND ALL CONTROLS TO BE PROVIDED.

6. FREEZER EVAPORATOR SHALL BE ELECTRICALLY CONNECTED TO ITS RESPECTIVE CONDENSING UNIT AS REQUIRED. PROVIDE WIRING FROM THE TIME CLOCK ON FREEZER CONDENSING UNIT TO THE ELECTRIC DEFROST HEATERS IN THE EVAPORATOR. ELECTRICAL INTERCONNECTIONS BETWEEN THE REFRIGERATOR EVAPORATORS AND THEIR RESPECTIVE CONDENSING UNITS IS NOT REQUIRED.

7. REMOTE AIR COOLED REFRIGERATOR AND FREEZER CONDENSING UNITS (ITEMS #6 & #7) SHALL BE MOUNTED ON METAL RACKS AND FACTORY WIRED. UNITS SHALL BE LOCATED OUTDOORS ON CONCRETE PAD AS SHOWN ON PLAN. LOCATION OF CONDENSING UNITS MAY VARY DEPENDING ON SITE-ADAPT CONSIDERATIONS.

   (3) REFRIGERATOR CONDENSING UNITS SHALL BE WIRED 208-60-3 WITH AN APPROX. TOTAL LOAD OF 5.8 AMPS. EACH, NOT INCLUDING EVAPORATOR.

   FREEZER CONDENSING UNIT SHALL BE WIRED 208-60-3 WITH AN APPROX. TOTAL LOAD OF 24.5 AMPS., INCLUDING EVAPORATOR. A SEPARATE 208-60-1 PHASE LINE SHALL BE RUN FROM THE CONTROL PANEL ON THE CONDENSING UNIT TO THE EVAPORATOR IN THE WALK-IN TO HANDLE AN 11.7 AMP. LOAD FOR THE ELECTRIC DEFROST HEATERS.

8. OVERALL HEIGHT OF WALK-IN SHALL BE APPROX. 9'-5" A.F.F.

9. K.E.C. SHALL PROVIDE METAL TRIM STRIPS TO MATCH WALK-IN FACING WHERE WALK-IN ABUTS BUILDING WALLS, AND CLOSURE PANELS FROM TOP OF WALK-IN TO FINISHED CEILING.

10. FINISHED FLOOR TO BE LEVEL PLUS OR MINUS 1/8".

11. ALL ELECTRIC CONDUIT SHALL BE RUN ON TOP (EXTERIOR) OF WALK-IN AND SHALL HAVE VAPOR SEALS ON INTERIOR AND EXTERIOR OF CONDUIT.

ICE MAKING MACHINE REMOTE CONDENSER NOTES

1. TWO REMOTE CONDENSERS FOR ICE MAKING MACHINES - ITEM #92 SHALL BE INSTALLED ON BUILDING ROOF AS CLOSE AS POSSIBLE ABOVE ICE MAKING MACHINE LOCATIONS. EACH CONDENSER MEASURES APPROX. 28" X 30" X 30" HIGH AND WEIGHS APPROX. 95 LBS.

2. EACH CONDENSER SHALL BE ELECTRICALLY CONNECTED TO ITS RESPECTIVE ICE MACHINE. SEPARATE ELECTRICAL ROUGH-INS FOR THE CONDENSERS ARE NOT REQUIRED.

3. REFRIGERATION LINES FOR EACH CONDENSER FURNISHED AND INSTALLED WITH ICE MAKING MACHINES.

SODA SYSYEM NOTES

1. TWO 6" DIA. PVC CONDUITS STUBBED UP OUT OF FLOOR 4" A.F.F. SYRUP AND CO2 LINES AND BAG-N-BOX JUICE LINES EXTENDED DOWN INTO CONDUIT BY VENDOR(S).

2. PROVIDE TWO 6" DIA. PVC CONDUITS BELOW FLOOR FOR SYRUP AND CO2 LINES AND BAG-N-BOX JUICE LINES . ALL TURNS TO BE SMOOTH SWEEPS WITH 30" MIN. RADIUS. SYRUP AND CO2 LINES AND BAG-N-BOX JUICE LINES EXTENDED THROUGH CONDUITS BY VENDOR(S).

3. 6" DIA. PVC CONDUIT STUBBED UP OUT OF FLOOR 4" A.F.F. SYRUP AND CO2 LINES AND BAG-N-BOX JUICE LINES EXTENDED UP OUT OF CONDUIT AND CONNECTED TO DISPENSING EQUIPMENT BY VENDOR(S).

4. TWO 2" DIA. PVC CONDUITS STUBBED UP OUT OF FLOOR 4" A.F.F. FOR CO2 LINES FROM BULK CO2 TANK. CO2 LINES EXTENDED DOWN INTO CONDUITS BY VENDOR.

5. PROVIDE TWO 2" DIA. PVC CONDUITS BELOW FLOOR FOR CO2 LINES FROM BULK CO2 TANK. ALL TURNS TO BE SMOOTH SWEEPS WITH 24" MIN. RADIUS. CO2 LINES EXTENDED THROUGH CONDUITS BY VENDOR.

6. 2" DIA. PVC CONDUIT STUBBED UP OUT OF FLOOR 4" A.F.F. CO2 LINES FROM BULK CO2 TANK TO BE EXTENDED UP OUT OF CONDUIT AND CONNECTED TO DISPENSING EQUIPMENT BY VENDOR(S)

GENERAL NOTES

1. ALL WORK SHALL BE DONE IN ACCORDANCE WITH APPLICABLE CODES.

2. ALL DIMENSIONS ARE FROM THE FINISHED SURFACE OF WALLS, FLOORS OR CEILINGS.

3. ALL DIMENSIONS INDICATED FOR ROUGH-INS SHALL BE TO THE CENTER OF THE ROUGH-IN.

4. UTILITY REQUIREMENTS SHOWN ON DRAWINGS ARE FOR THE FOOD SERVICE EQUIPMENT ONLY.

5. IN-WALL BACKING SHALL BE PROVIDED FOR ALL WALL MOUNTED FOOD SERVICE EQUIPMENT AS REQUIRED. COORDINATE FOR TYPES, SIZES AND LOCATIONS OF BACKING.

ELECTRICAL NOTES

1. ELECTRICAL ROUGH-INS AND FINAL CONNECTIONS TO EQUIPMENT SHALL BE UNDER ELECT. SEC. MATERIALS FOR EQUIPMENT CONNECTIONS SHALL BE FURNISHED AND INSTALLED UNDER ELECT. SEC. EXCEPT AS NOTED ON DRAWINGS.

2. ELECTRICAL DISCONNECTS ARE NOT FURNISHED WITH EQUIPMENT. THEY SHALL BE FURNISHED AND INSTALLED WHERE REQUIRED UNDER ELECT. SEC. COORDINATE WITH EQUIPMENT ON PROPER LOCATIONS.

3. ALL CONDUIT SHALL BE CONCEALED IN WALLS, FLOOR OR CEILING EXCEPT ONLY WHERE ABSOLUTELY NECESSARY.

4. ALL CONDUIT AND ELECTRICAL CORDS SHALL BE LOCATED UP OFF THE FLOOR TO FACILITATE FLOOR CLEANING AND SHALL BE SUPPORTED FROM ABOVE. FLOOR MOUNTED SUPPORTS SHALL NOT BE USED.

5. RECEPTACLES OF THE PROPER CONFIGURATION TO ACCOMMODATE THE PLUGS FURNISHED ON THE EQUIPMENT SHALL BE FURNISHED AND INSTALLED UNDER ELECT. SEC.

PLUMBING NOTES

1. PLUMBING ROUGH-INS UNDER PLUMB. SEC. INCLUDING FLOOR DRAINS, FLOOR SINKS, AND GREASE INTERCEPTORS.

2. FINAL CONNECTIONS TO EQUIPMENT UNDER PLUMB. SEC.. COORDINATE WITH THE EQUIPMENT INSTALLER ON CONNECTIONS TO EQUIPMENT.

3. MATERIALS FOR EQUIPMENT CONNECTIONS INCLUDING PIPING, FITTINGS, STOPS, TRAPS, BACKFLOW PREVENTION DEVICES AND PRESSURE REGULATORS FURNISHED AND INSTALLED UNDER PLUMB. SEC. EXCEPT AS NOTED ON DRAWINGS.

4. ALL PIPING SHALL BE CONCEALED IN WALLS, FLOOR OR CEILING EXCEPT ONLY WHERE ABSOLUTELY NECESSARY.

5. ALL PIPING SHALL BE LOCATED UP OFF THE FLOOR TO FACILITATE FLOOR CLEANING AND SHALL BE SUPPORTED FROM ABOVE. FLOOR MOUNTED SUPPORTS SHALL NOT BE USED.

6. WATER FILTERS OR SOFTENERS NOT FURNISHED WITH EQUIPMENT EXCEPT AS NOTED ON DRAWINGS.

7. GAS PRESSURE REGULATORS SHALL BE FURNISHED WITH THE EQUIPMENT AND INSTALLED UNDER PLUMB. SEC..

8. SINKS: FAUCETS AND DRAIN FITTINGS FURNISHED WITH THE EQUIPMENT AND INSTALLED UNDER PLUMB. SEC.

9. DISPOSERS: SOLENOID VALVE, ATMOSPHERIC VACUUM BREAKER, AND WATER INLET FURNISHED WITH THE EQUIPMENT AND INSTALLED UNDER PLUMB. SEC.

10. BOOSTER HEATERS: PRESSURE REDUCING VALVE, TEMPERATURE/ PRESSURE RELIEF VALVE, TWO TEMPERATURE/PRESSURE GAUGES AND SHOCK ABSORBER FURNISHED WITH THE EQUIPMENT AND INSTALLED UNDER PLUMB. SEC.

11. 180 DEGREE WATER LINE FROM BOOSTER HEATER TO DISHWASHER SHALL BE INSULATED UNDER PLUMB. SEC.

VENTILATION NOTES

1. EXHAUST HOOD FURNISHED AND INSTALLED BY EQUIPMENT INSTALLER. DUCTWORK AND ROOF TOP EQUIPMENT FURNISHED AND INSTALLED UNDER MECH. SEC.

2. CONTROLS OR SWITCHES FOR EXHAUST FANS OR MAKE-UP AIR UNITS SHALL BE FURNISHED WITH THE HVAC EQUIPMENT. CONTROLS OR SWITCHES SHALL BE RECESSED IN THE BUILDING WALL, NOT ON THE EXHAUST HOOD.

3. FIRE SUPPRESSION SYSTEM FURNISHED AND INSTALLED WITH THE EXHAUST HOOD. CONNECTIONS TO FIRE SUPPRESSION SYSTEM FURNISHED AND INSTALLED UNDER ELECT. SEC.

EQUIPMENT CLASSES

A - CONTRACTOR FURNISHED, CONTRACTOR INSTALLED FROM CONSTRUCTION FUNDS.

C - GOVERNMENT FURNISHED, GOVERNMENT INSTALLED. FUNDS OTHER THAN CONSTRUCTION.

L - FURNISHED BY VENDOR

LEGEND

EQUIPMENT ITEM

PLUMBING REQUIREMENT

ELECTRICAL REQUIREMENT

VENTILATION REQUIREMENT

WALK-IN NOTE

SODA SYSTEM NOTE

A.	AMPERES
A.F.F.	ABOVE FINISHED FLOOR
C.W.	COLD WATER
D.R.	DUPLEX RECEPTACLE
E.C.	EQUIPMENT CONNECTION
F.D.	FLOOR DRAIN
F.F.D.	FLOOR DRAIN WITH FUNNEL
F.R.	FOUR-PLEX RECEPTACLE
F.S.	FLOOR SINK
H.P.	HORSE POWER
H.W.	HOT WATER
J.B.	JUNCTION BOX
K.W.	KILOWATT
P.W.	PRE-WIRED
S.O.	STUB OUT
S.R.	SPECIAL RECEPTACLE
S.U.	STUB UP

US Army Corps of Engineers
Norfolk District

MARK	DATE	DESCRIPTION	BY	APP

DESIGNED: JK
DRAWN: JK,TJT
PROJECT NO. —
CHECKED: JK
SUBMITTED: JK
DATE: 12/11/09
SCALE: NONE
NORFOLK DISTRICT FILE NO. —
SPECIFICATION NO. —
DRAWING NO. QF001
Last revised on 12-11-09
File name: QF001.DWG
Plot scale: 1:1

NORFOLK DISTRICT
CORPS OF ENGINEERS
NORFOLK, VIRGINIA

NAO
CENTER OF
STANDARDIZATION

US ARMY STANDARD DESIGN
800 SOLDIER PERMANENT PARTY
DINING FACILITY

GENERAL NOTES AND LEGEND

SHEET REFERENCE NUMBER
QF001
SHEET OF

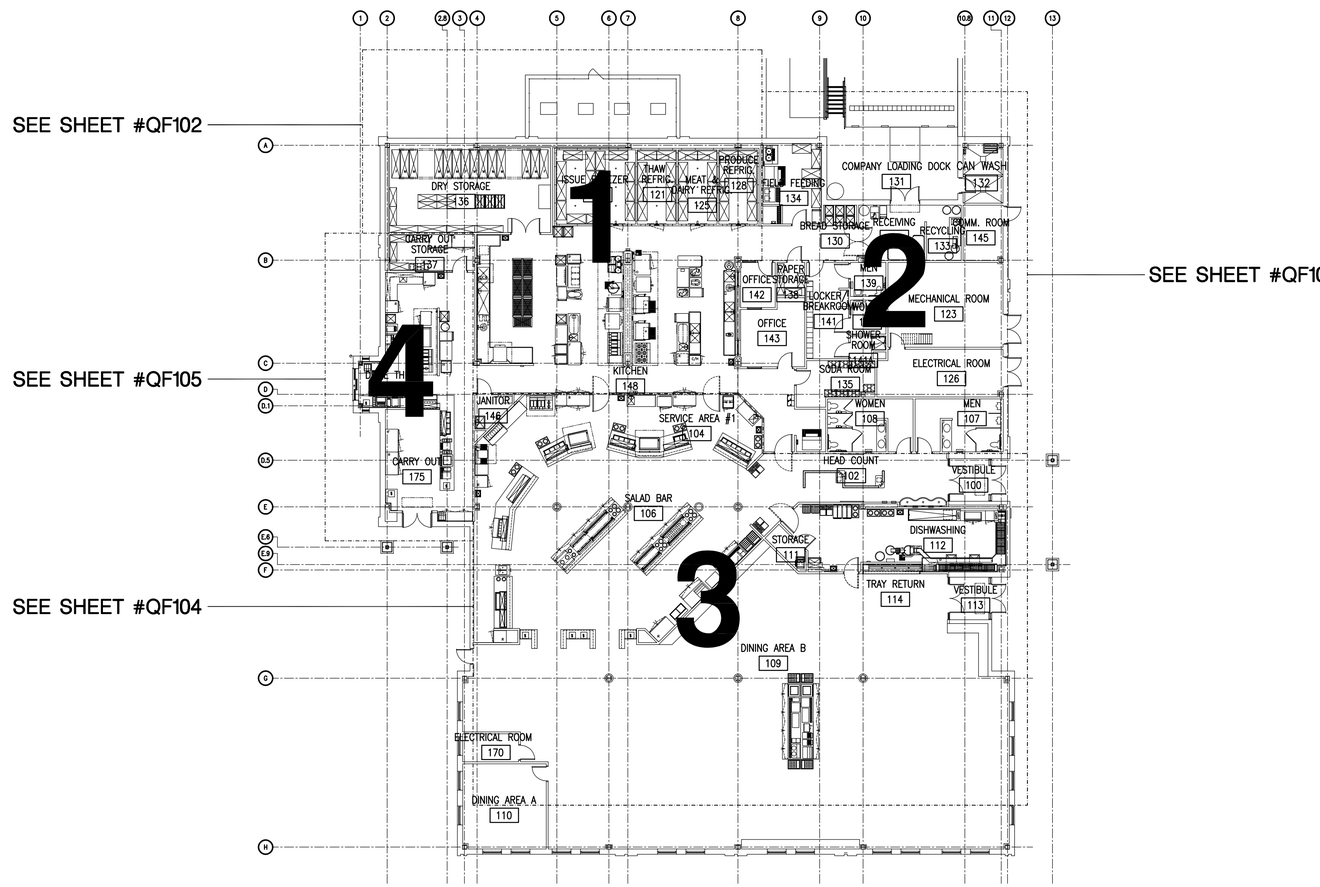

OVERALL FOOD SERVICE PLAN

SCALE : 1/16"=1'-0"

US Army Corps of Engineers
Norfolk District

MARK	DATE	DESCRIPTION	BY	APP

DESIGNED: JK
DRAWN: JK,TJT
PROJECT NO. —
CHECKED: JK
SUBMITTED: JK
DATE: 12/11/09
SCALE: AS NOTED
NORFOLK DISTRICT FILE NO. —
SPECIFICATION NO. —
DRAWING NO. QF101
Last workset: 12-11-09
Plot scale: 1:1
File name: QF101.DWG

NORFOLK DISTRICT
CORPS OF ENGINEERS
NORFOLK, VIRGINIA

NAO
CENTER OF
STANDARDIZATION

US ARMY STANDARD DESIGN
800 SOLDIER PERMANENT PARTY
DINING FACILITY

OVERALL FOOD SERVICE PLAN

SHEET REFERENCE NUMBER
QF101
SHEET OF

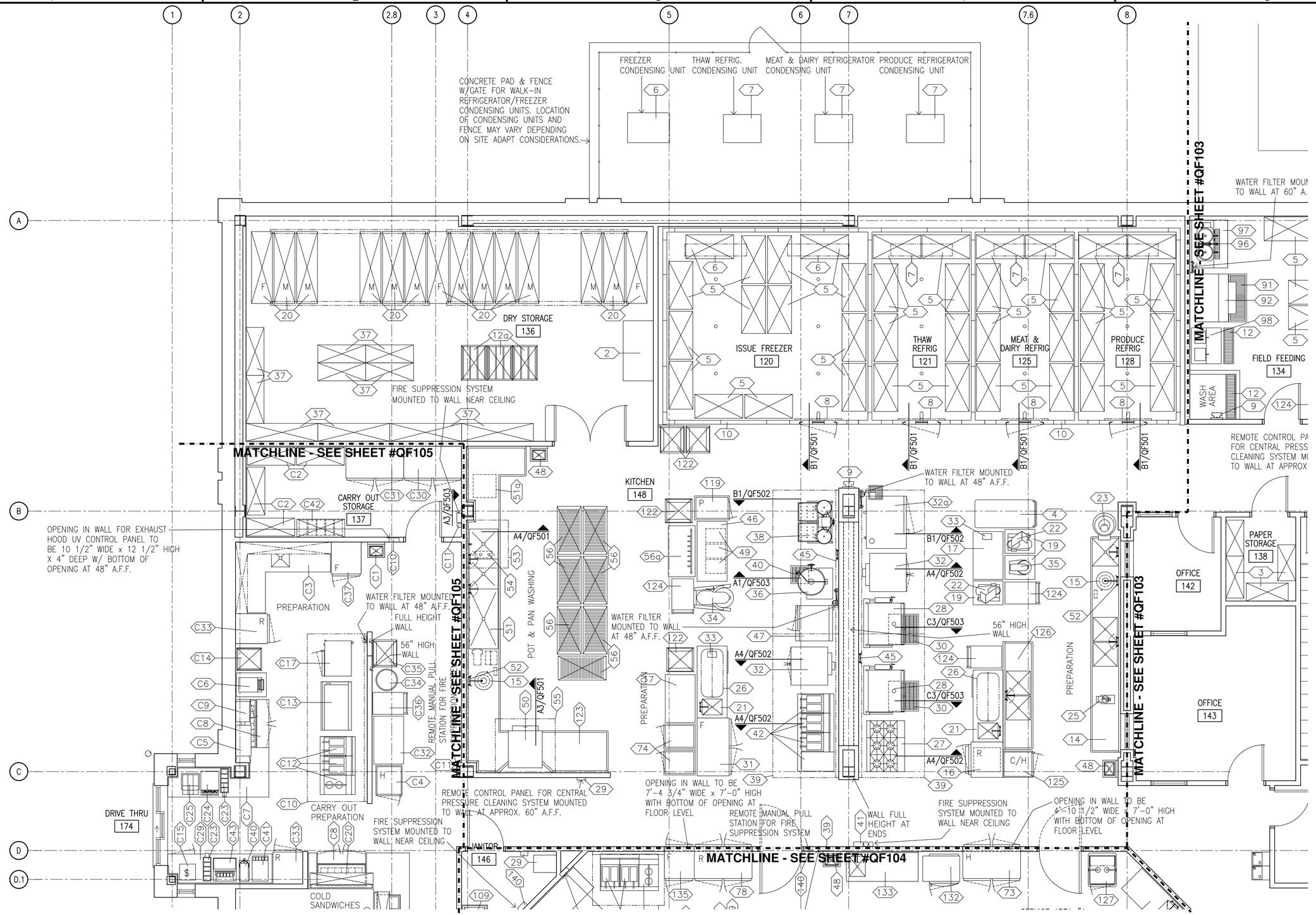

FOOD SERVICE PLAN - AREA 1

SCALE : 1/4"=1'-0"

US Army Corps of Engineers
Norfolk District

MARK	DATE	DESCRIPTION	BY	APP

DATE: 12/11/09
SCALE: AS NOTED
NORFOLK DISTRICT FILE NO. —
SPECIFICATION NO. —
CHECKED: JK
SUBMITTED: JK
DESIGNED: JK
DRAWN: JK,TJT
PROJECT NO. —
DRAWING NO. QF102
Last revised: 12-11-09
Plot scale: 1:1
File name: QF102.DWG

NORFOLK DISTRICT
CORPS OF ENGINEERS
NORFOLK, VIRGINIA

NAO CENTER OF STANDARDIZATION

US ARMY STANDARD DESIGN
800 SOLDIER PERMANENT PARTY DINING FACILITY

FOOD SERVICE PLAN - AREA 1

SHEET REFERENCE NUMBER
QF102
SHEET OF

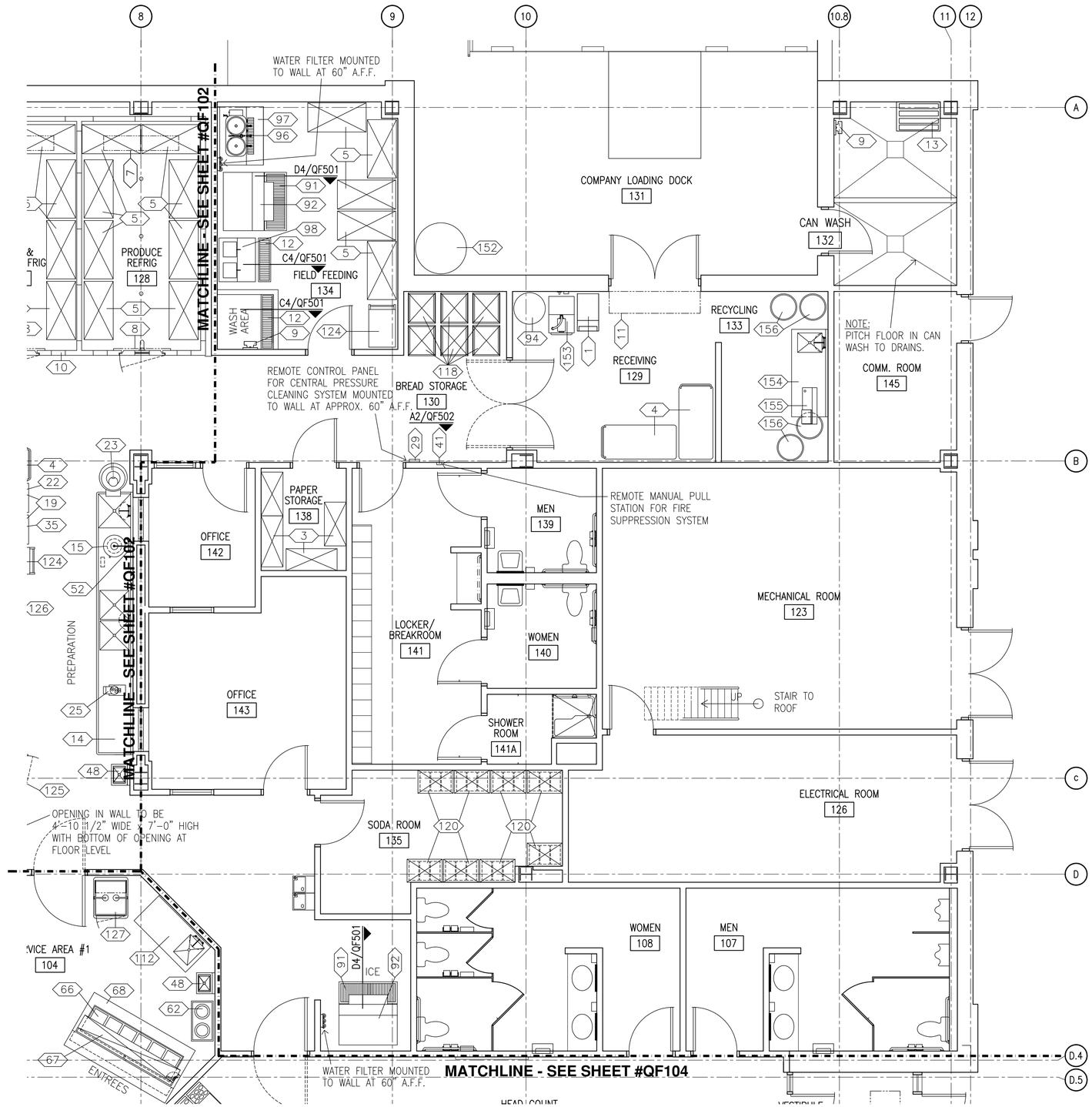

FOOD SERVICE PLAN - AREA 2

SCALE : 1/4"=1'-0"

AS NOTED

JK JK

JK JK, TJT

QF103

QF103.DWG

FOOD SERVICE PLAN - AREA 2

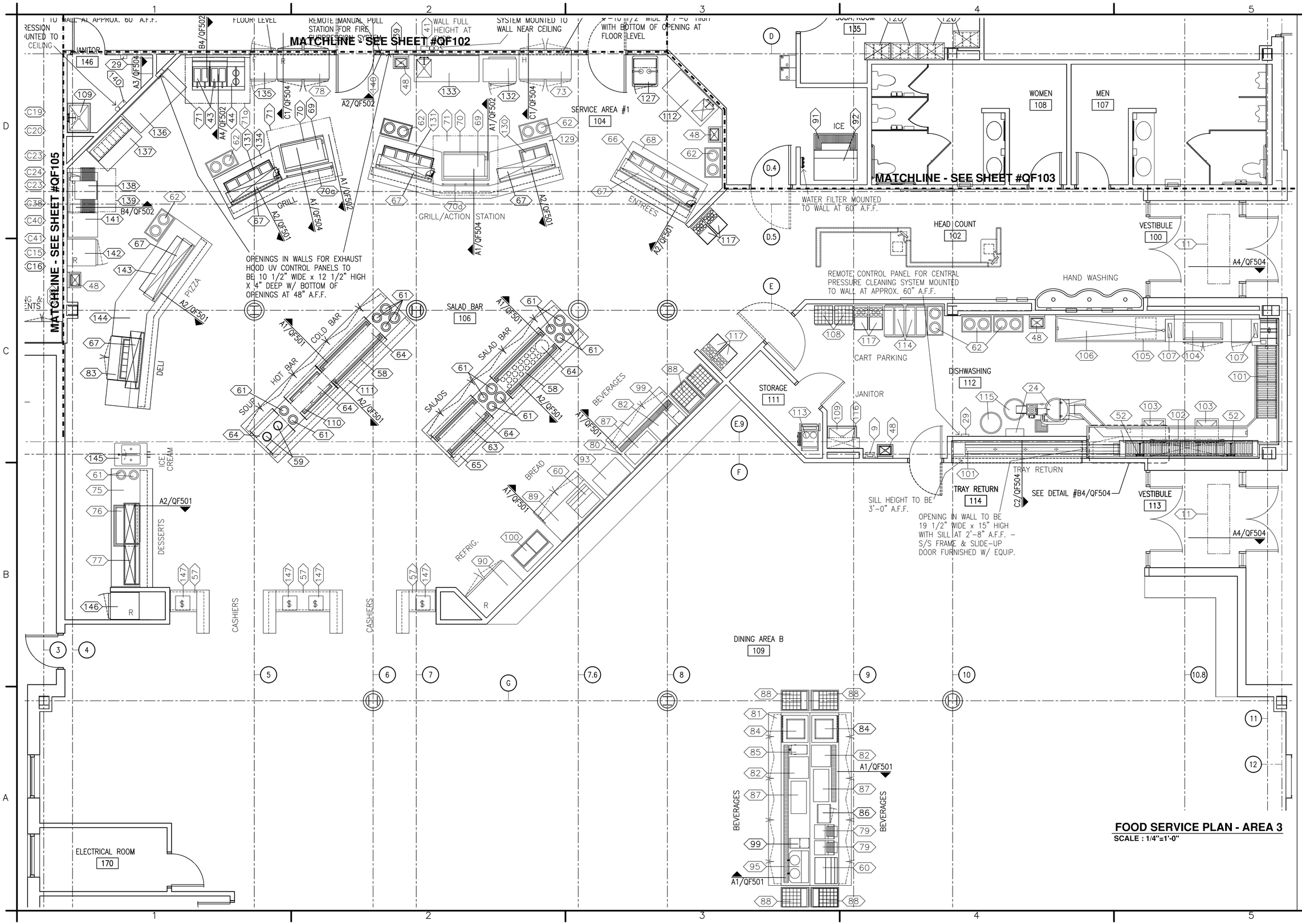

FOOD SERVICE PLAN - AREA 3

SCALE : 1/4"=1'-0"

US Army Corps of Engineers
Norfolk District

MARK	DATE	DESCRIPTION	BY	APP

DESIGNED: JK
DRAWN: JK, TJT
PROJECT NO. —
CHECKED: JK
SUBMITTED: JK
DATE: 12/11/09
SCALE: AS NOTED
NORFOLK DISTRICT FILE NO. —
SPECIFICATION NO. —
DRAWING NO. QF104
Last saved: 12-11-09
File name: QF104.DWG
Plot scale: 1:1

NORFOLK DISTRICT
CORPS OF ENGINEERS
NORFOLK, VIRGINIA

NAO CENTER OF STANDARDIZATION

US ARMY STANDARD DESIGN
800 SOLDIER PERMANENT PARTY DINING FACILITY

FOOD SERVICE PLAN - AREA 3

SHEET REFERENCE NUMBER
QF104
SHEET OF

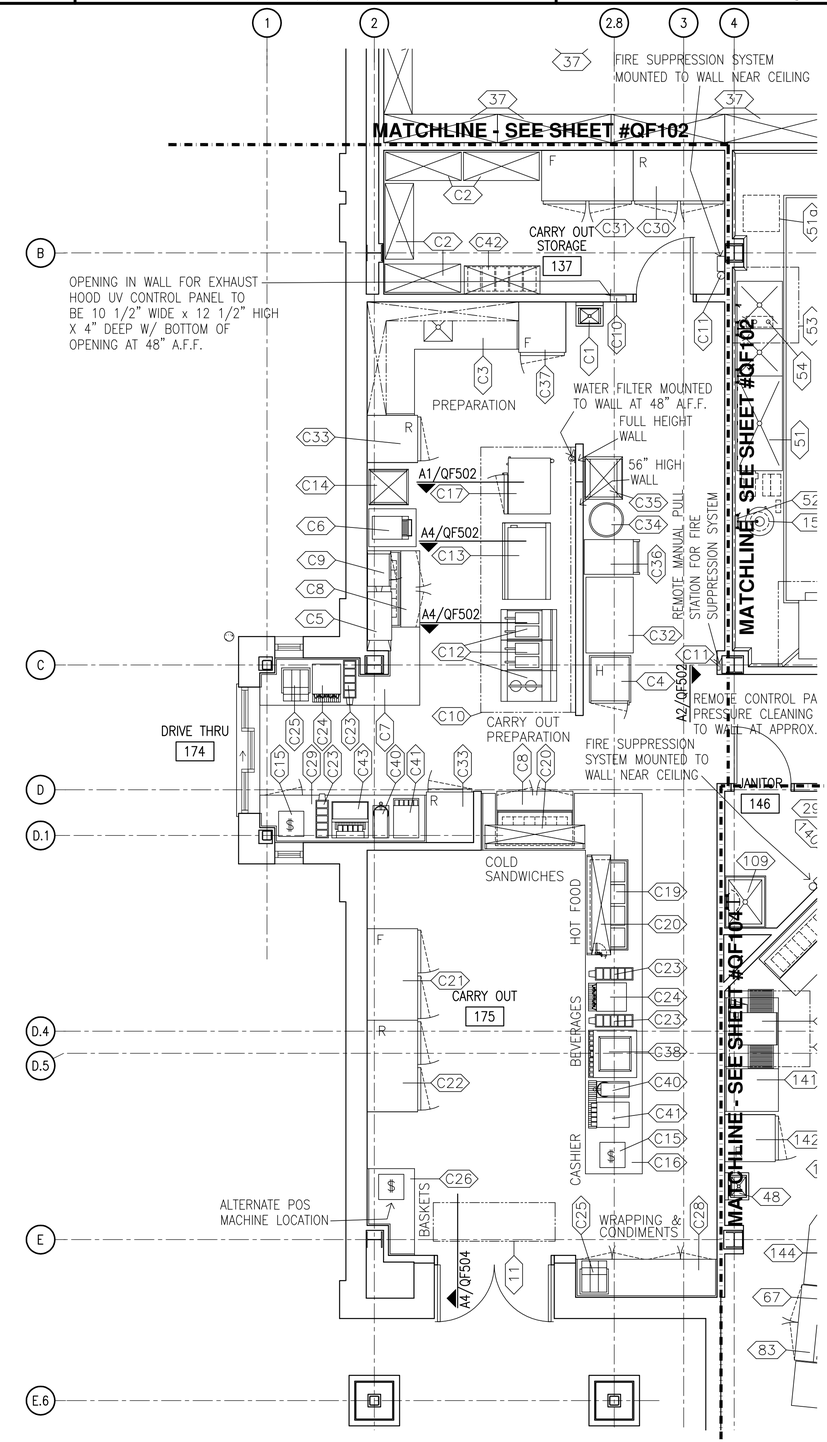

FOOD SERVICE PLAN - AREA 4

SCALE : 1/4"=1'-0"

US Army Corps of Engineers
Norfolk District

MARK	DATE	DESCRIPTION	BY	APP

DATE: 12/11/09
SCALE: AS NOTED
NORFOLK DISTRICT FILE NO. —
SPECIFICATION NO. —
DRAWING NO. QF105
Last saved: 12-11-09
Plot scale: 1:1
File name: QF105.DWG

DESIGNED: JK
DRAWN: JK, TJT
PROJECT NO. —
CHECKED: JK
SUBMITTED: JK

NORFOLK DISTRICT
CORPS OF ENGINEERS
NORFOLK, VIRGINIA

NAO
CENTER OF
STANDARDIZATION

US ARMY STANDARD DESIGN
800 SOLDIER PERMANENT PARTY
DINING FACILITY

FOOD SERVICE PLAN - AREA 4

SHEET
REFERENCE
NUMBER
QF105
SHEET OF

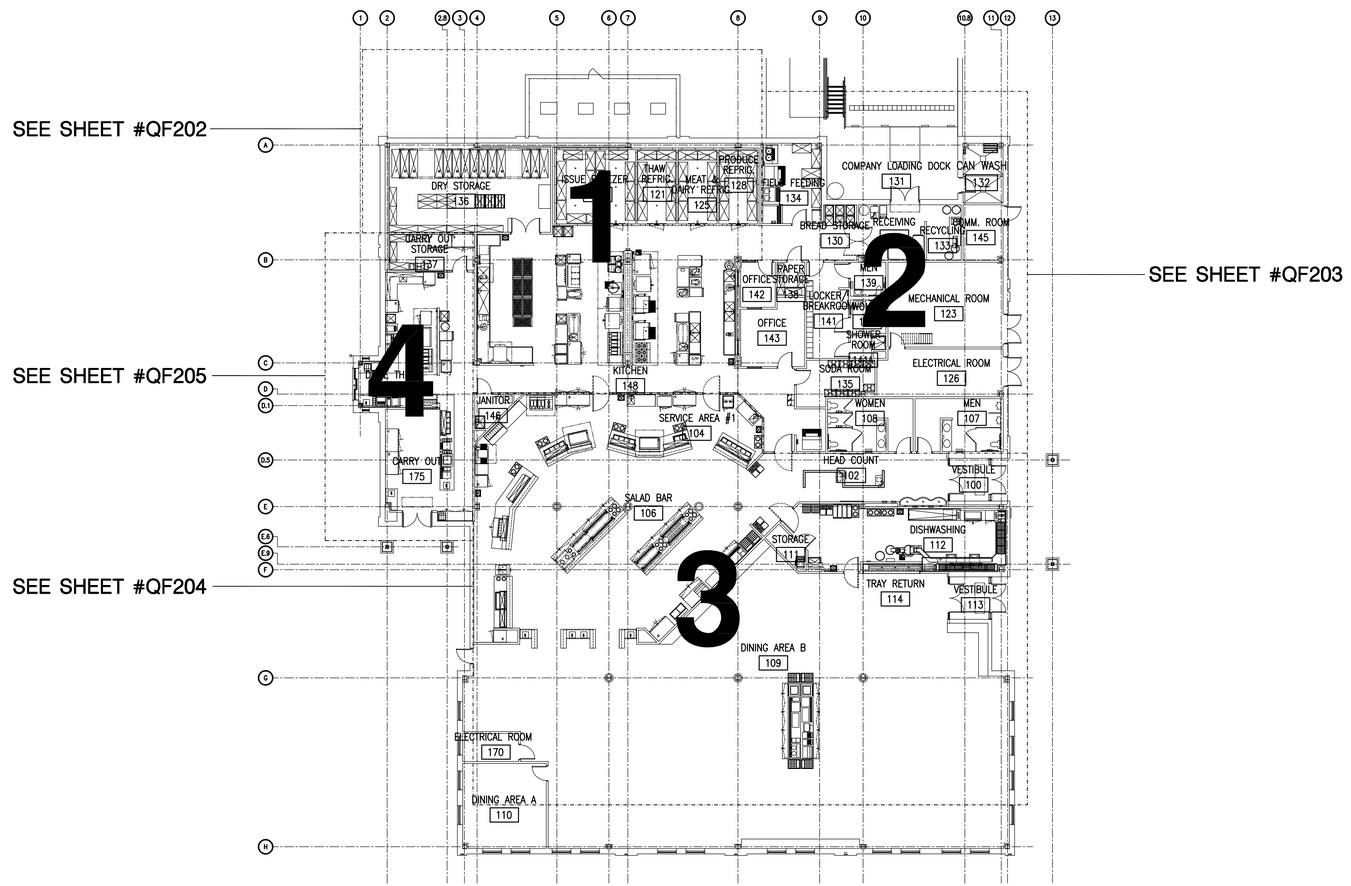

OVERALL UTILITY REQUIREMENT PLAN

SCALE : 1/16"=1'-0"

US Army Corps of Engineers
Norfolk District

MARK	DATE	DESCRIPTION	BY	APP

DESIGNED: JK
DRAWN: JK, TJT
PROJECT NO. —
CHECKED: JK
SUBMITTED: JK
DATE: 12/11/09
SCALE: AS NOTED
NORFOLK DISTRICT FILE NO. —
SPECIFICATION NO. —
DRAWING NO. QF201
Last Revised: 12-11-09
File name: QF201.DWG
Plot scale: 1:1

NORFOLK DISTRICT
CORPS OF ENGINEERS
NORFOLK, VIRGINIA

NAO CENTER OF STANDARDIZATION

US ARMY STANDARD DESIGN
800 SOLDIER PERMANENT PARTY
DINING FACILITY

OVERALL UTILITY REQUIREMENT PLAN

SHEET REFERENCE NUMBER
QF201
SHEET OF

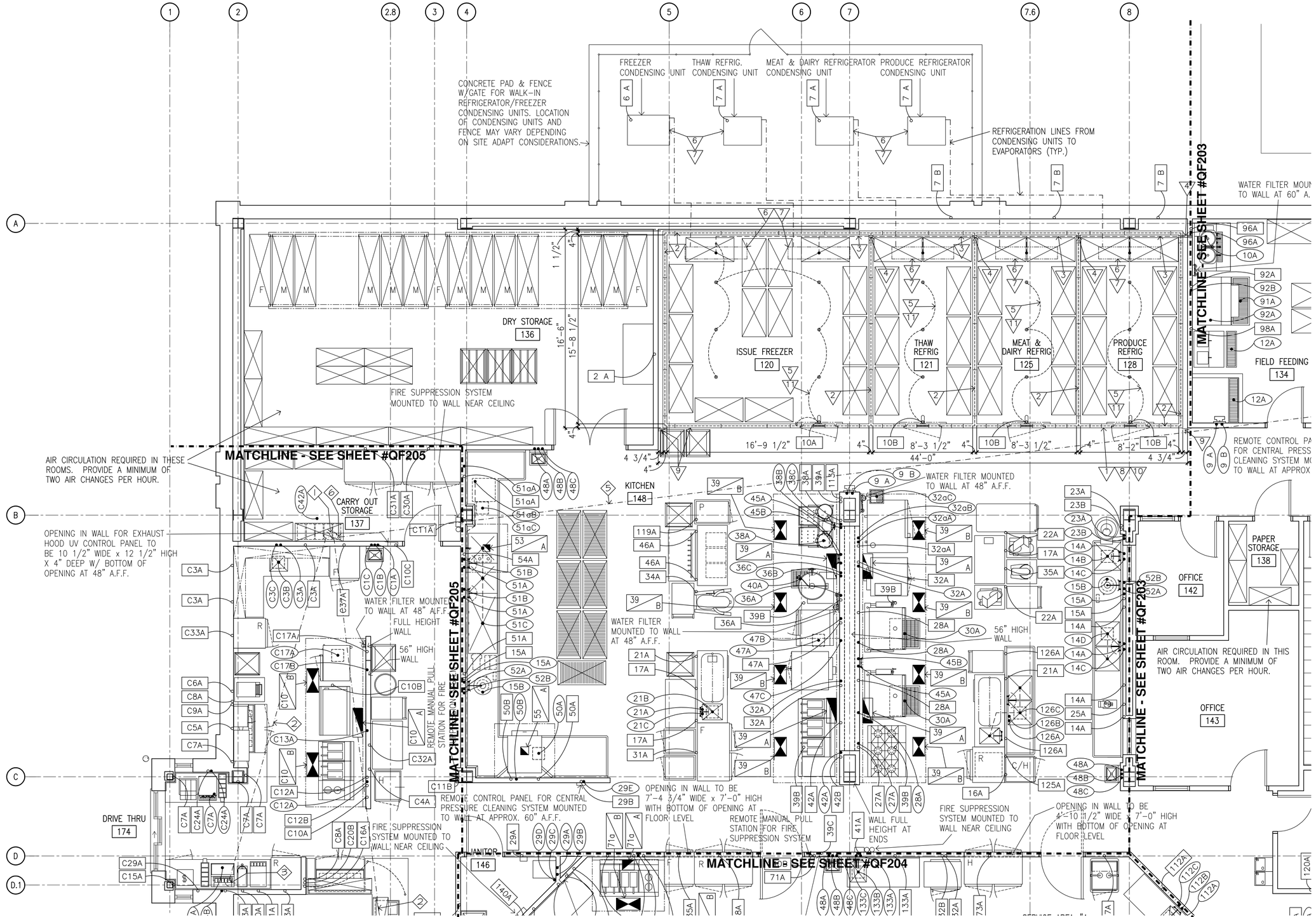

UTILITY REQUIREMENT PLAN - AREA 1

SCALE : 1/4"=1'-0"

US Army Corps of Engineers
Norfolk District

REVISIONS			
MARK	DATE	DESCRIPTION	BY	APP

DATE: 12/11/09
SCALE: AS NOTED
NORFOLK DISTRICT FILE NO. —
SPECIFICATION NO. —
DESIGNED: JK
DRAWN: JK,TJT
PROJECT NO. —
CHECKED: JK
SUBMITTED: JK
DRAWING NO. QF202
Last revised: 12-11-09
File name: QF202.DWG
Plot scale: 1:1

NORFOLK DISTRICT
CORPS OF ENGINEERS
NORFOLK, VIRGINIA

NAO CENTER OF STANDARDIZATION

US ARMY STANDARD DESIGN
800 SOLDIER PERMANENT PARTY DINING FACILITY

UTILITY REQUIREMENT PLAN - AREA 1

SHEET REFERENCE NUMBER
QF202
SHEET OF

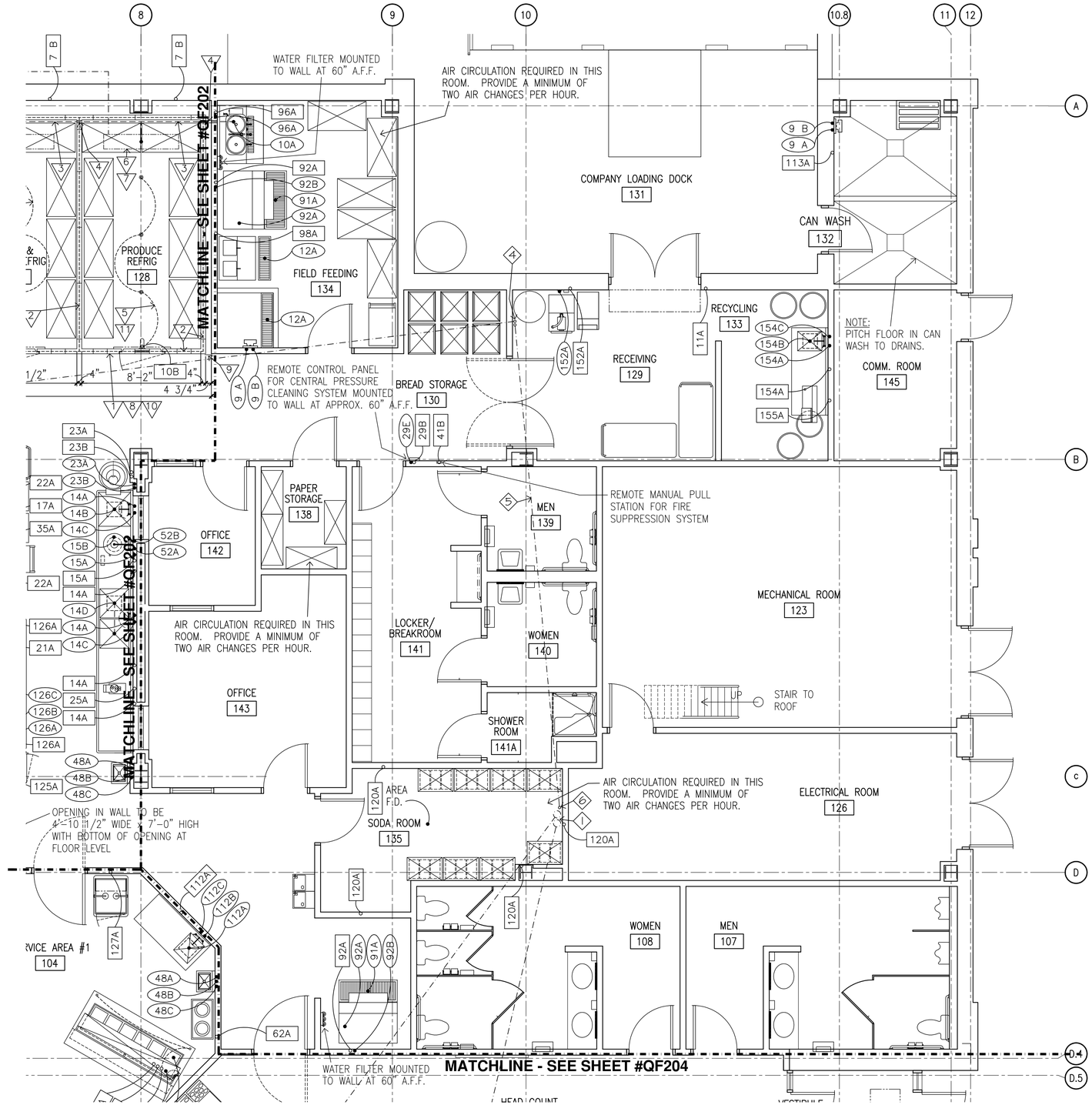

UTILITY REQUIREMENT PLAN - AREA 2

SCALE : 1/4"=1'-0"

US Army Corps of Engineers
Norfolk District

MARK	DATE	DESCRIPTION	BY	APP

DATE: 12/11/09
SCALE: AS NOTED
NORFOLK DISTRICT FILE NO. —
SPECIFICATION NO. —
Plot scale: 1:1

DESIGNED: JK
DRAWN: JK,TJT
PROJECT NO. —
CHECKED: JK
SUBMITTED: JK
DRAWING NO. QF203
Last revised: 12-11-09
File name: QF203.DWG

NORFOLK DISTRICT
CORPS OF ENGINEERS
NORFOLK, VIRGINIA

NAO CENTER OF STANDARDIZATION

US ARMY STANDARD DESIGN
800 SOLDIER PERMANENT PARTY DINING FACILITY

UTILITY REQUIREMENT PLAN - AREA 2

SHEET REFERENCE NUMBER
QF203
SHEET OF

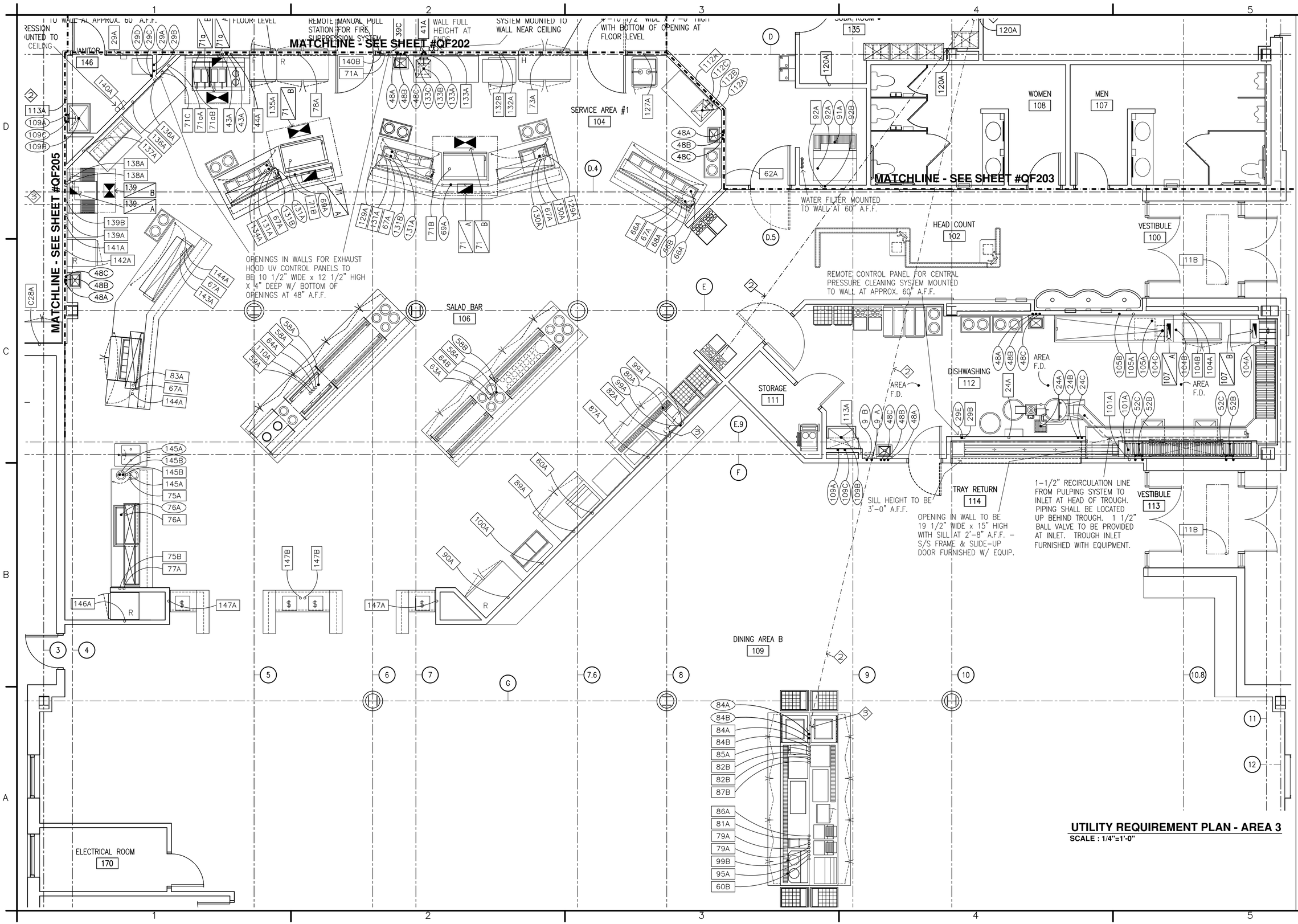

UTILITY REQUIREMENT PLAN - AREA 3

SCALE : 1/4"=1'-0"

US Army Corps of Engineers
Norfolk District

MARK	DATE	DESCRIPTION	BY	APP

DESIGNED: JK
DRAWN: JK,TJT
PROJECT NO. —
CHECKED: JK
SUBMITTED: JK
DATE: 12/11/09
SCALE: AS NOTED
NORFOLK DISTRICT FILE NO. —
SPECIFICATION NO. —
DRAWING NO. QF204
Last revision date: Oct-11-09
File name: QF204.DWG
Plot scale: 1:1

NORFOLK DISTRICT
CORPS OF ENGINEERS
NORFOLK, VIRGINIA

NAO CENTER OF STANDARDIZATION

US ARMY STANDARD DESIGN
800 SOLDIER PERMANENT PARTY DINING FACILITY

UTILITY REQUIREMENT PLAN - AREA 3

SHEET REFERENCE NUMBER
QF204
SHEET OF

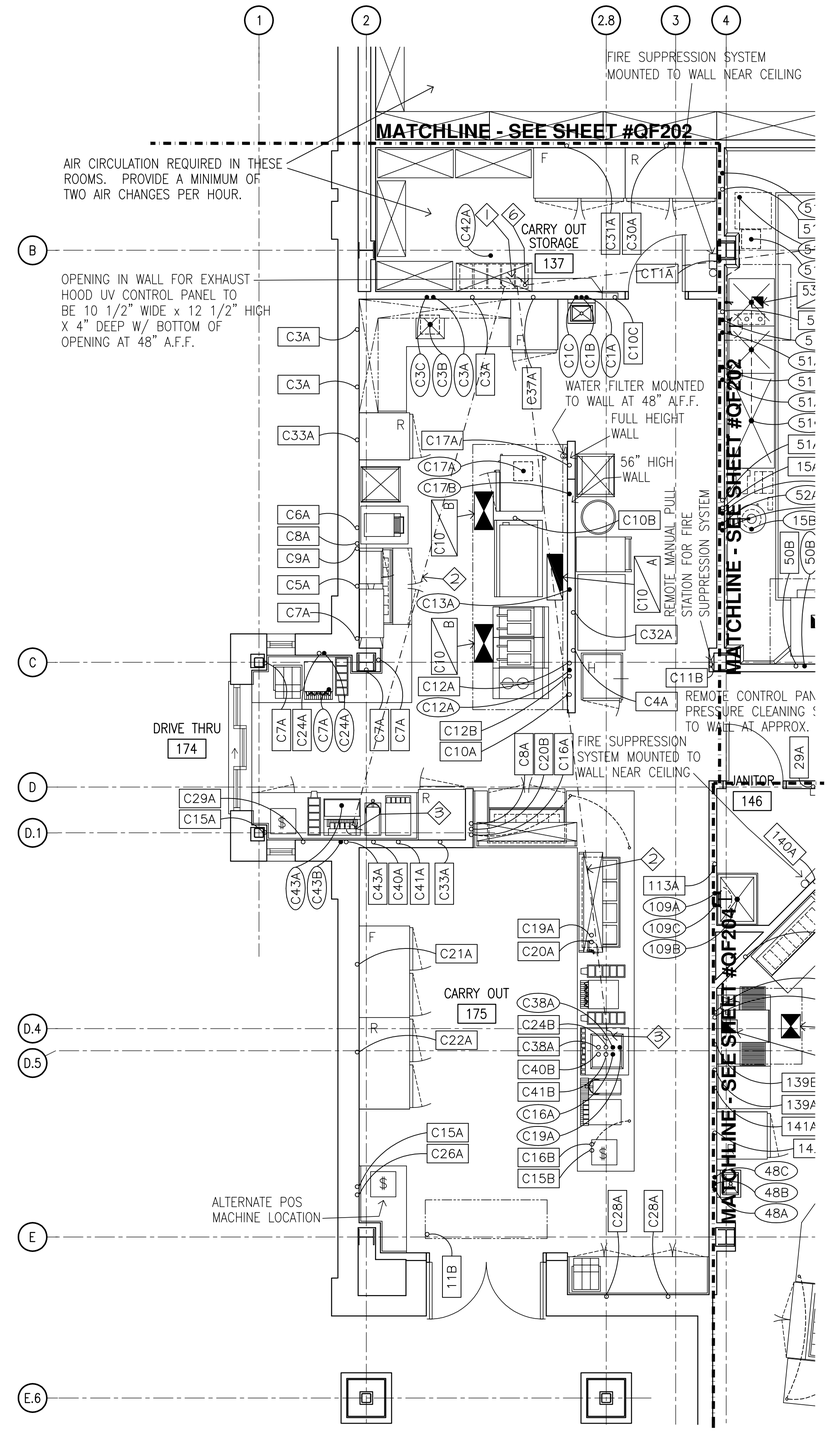

UTILITY REQUIREMENT PLAN - AREA 4

SCALE : 1/4"=1'-0"

US Army Corps of Engineers
Norfolk District

MARK	DATE	DESCRIPTION	BY	APP

DESIGNED: JK
DRAWN: JK,TJT
CHECKED: JK
SUBMITTED: JK
DATE: 12/11/09
SCALE: AS NOTED
NORFOLK DISTRICT FILE NO. —
SPECIFICATION NO. —
DRAWING NO. QF205
PROJECT NO. —
Last revised: 12-11-09
File name: QF205.DWG
Plot scale: 1:1

NORFOLK DISTRICT
CORPS OF ENGINEERS
NORFOLK, VIRGINIA

NAO
CENTER OF
STANDARDIZATION

US ARMY STANDARD DESIGN
800 SOLDIER PERMANENT PARTY
DINING FACILITY

UTILITY REQUIREMENT PLAN - AREA 4

SHEET
REFERENCE
NUMBER
QF205

SHEET OF

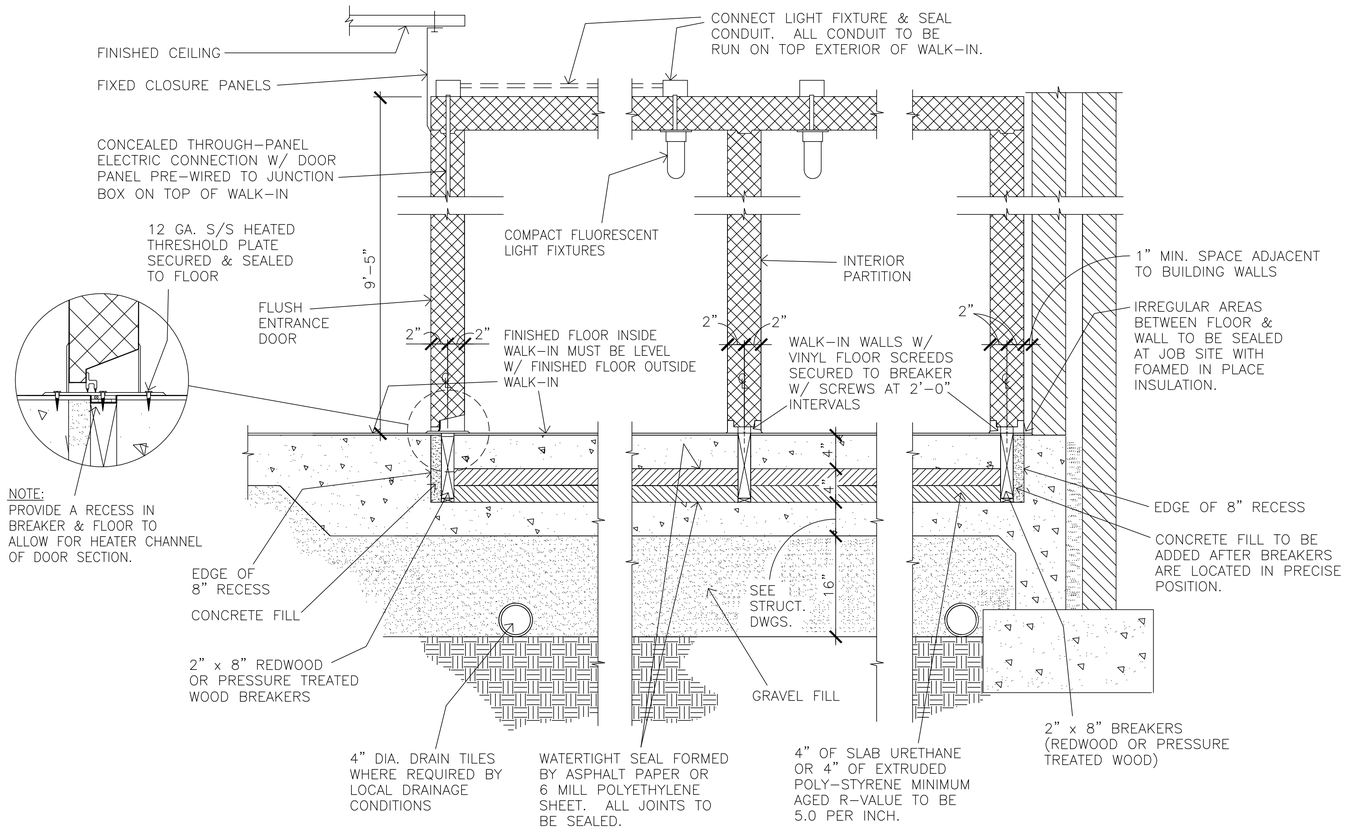

B1 / QF501 WALK-IN SECTION
SCALE: NONE

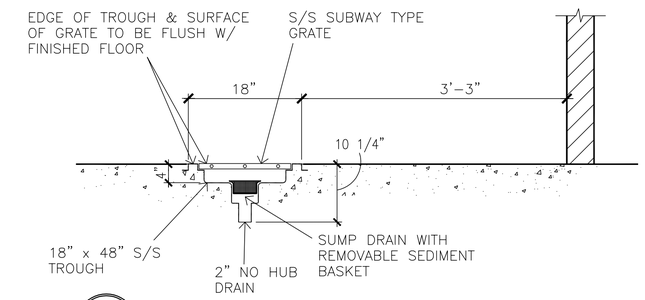

D4 / QF501 DRAIN TROUGH AT ICE MACHINE
SCALE: NONE

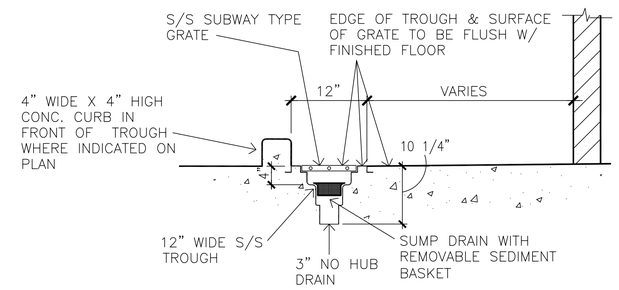

C4 / QF501 DRAIN TROUGH
SCALE: NONE

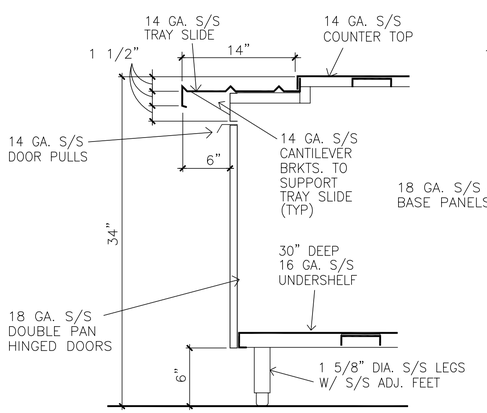

A1 / QF501 TYPICAL COUNTER SECTION
SCALE: NONE

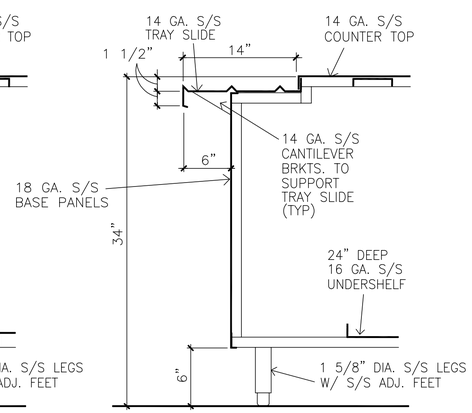

A2 / QF501 TYPICAL COUNTER SECTION
SCALE: NONE

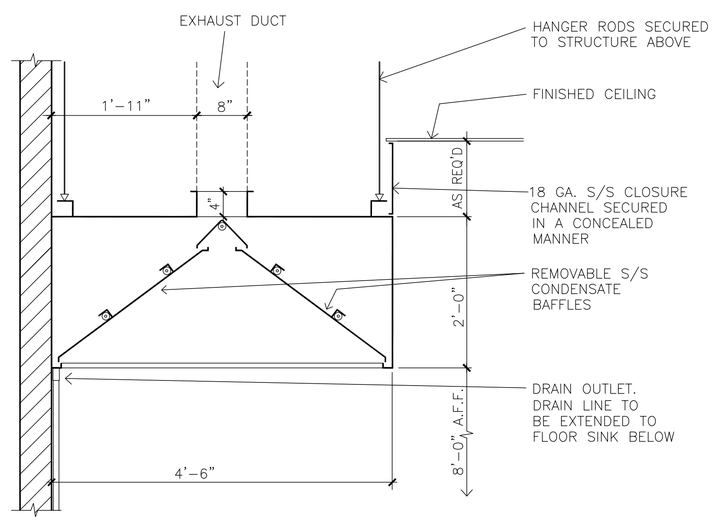

A3 / QF501 CONDENSATE HOOD SECTION
SCALE: NONE

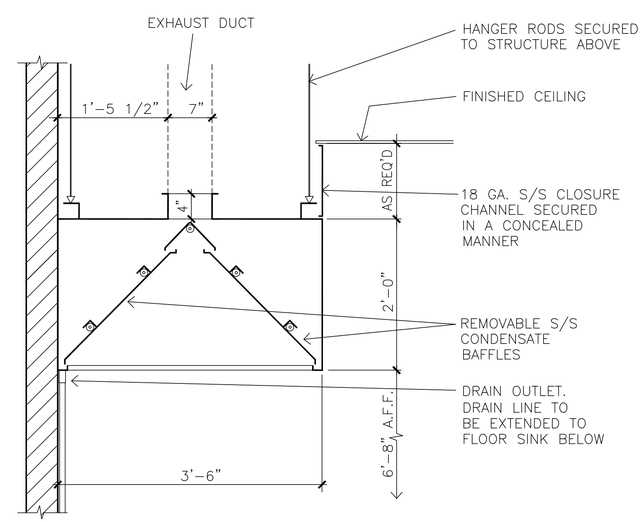

A4 / QF501 CONDENSATE HOOD SECTION
SCALE: NONE

US Army Corps of Engineers
Norfolk District

MARK	DATE	DESCRIPTION	BY	APP

DATE: 12/11/09
SCALE: AS NOTED
NORFOLK DISTRICT FILE NO. —
SPECIFICATION NO. —
Plot scale: 1:1
DESIGNED: JK
CHECKED: JK
DRAWN: JK,TJT
SUBMITTED: JK
PROJECT NO. —
DRAWING NO. QF501
Last revised: 12-11-09
File name: QF501.DWG

NORFOLK DISTRICT
CORPS OF ENGINEERS
NORFOLK, VIRGINIA

NAO CENTER OF STANDARDIZATION

US ARMY STANDARD DESIGN
800 SOLDIER PERMANENT PARTY DINING FACILITY

FOOD SERVICE DETAILS

SHEET REFERENCE NUMBER
QF501
SHEET OF

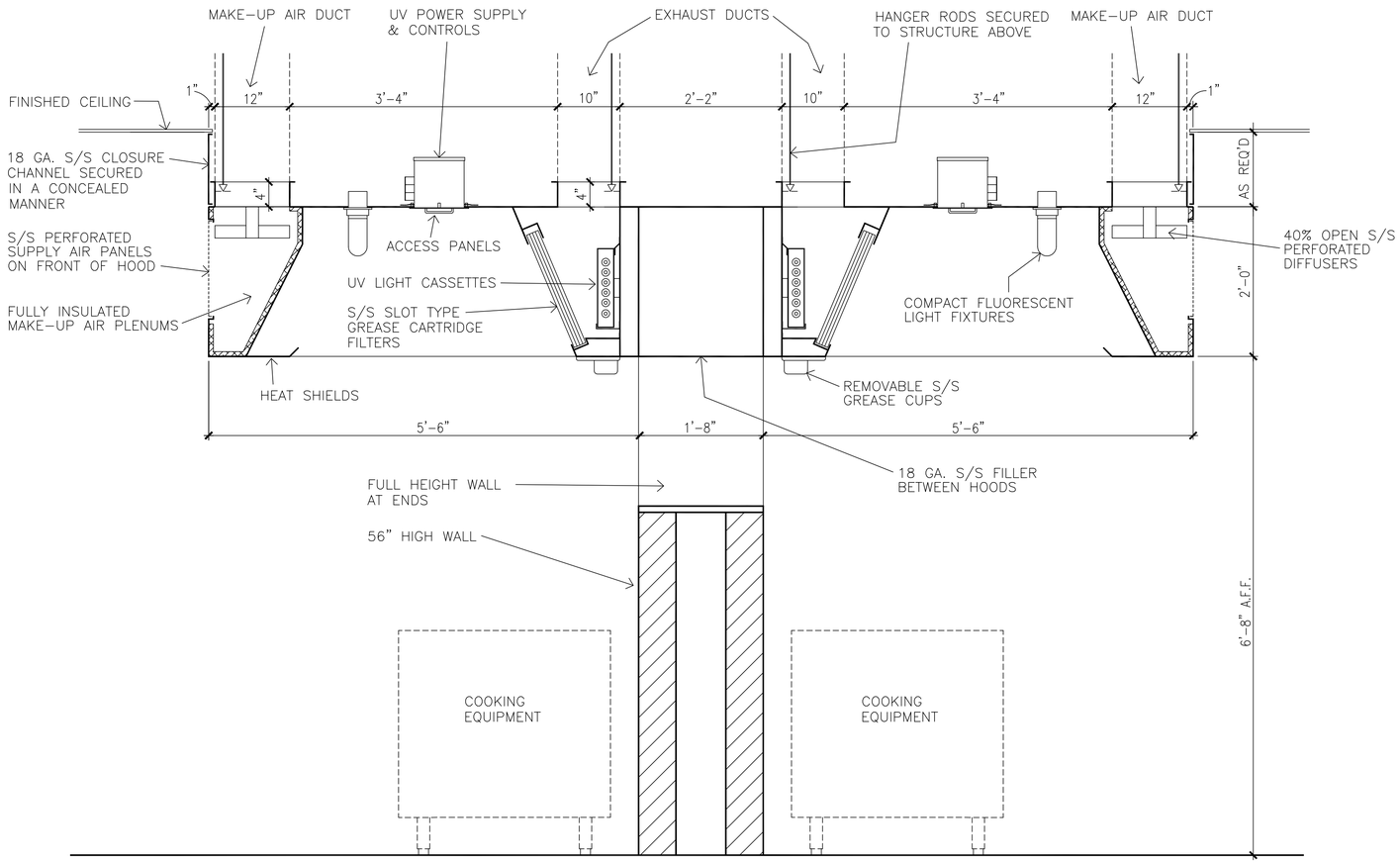

B1 / QF502 EXHAUST HOOD SECTION
SCALE: NONE (ITEM #39)

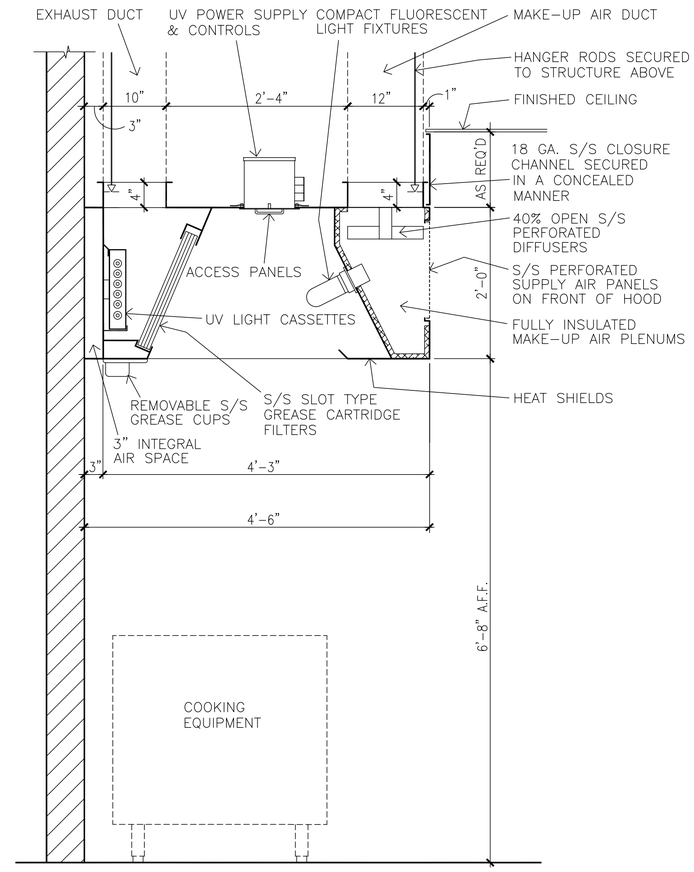

B4 / QF502 EXHAUST HOOD SECTION
SCALE: NONE (ITEMS #71a & #139)

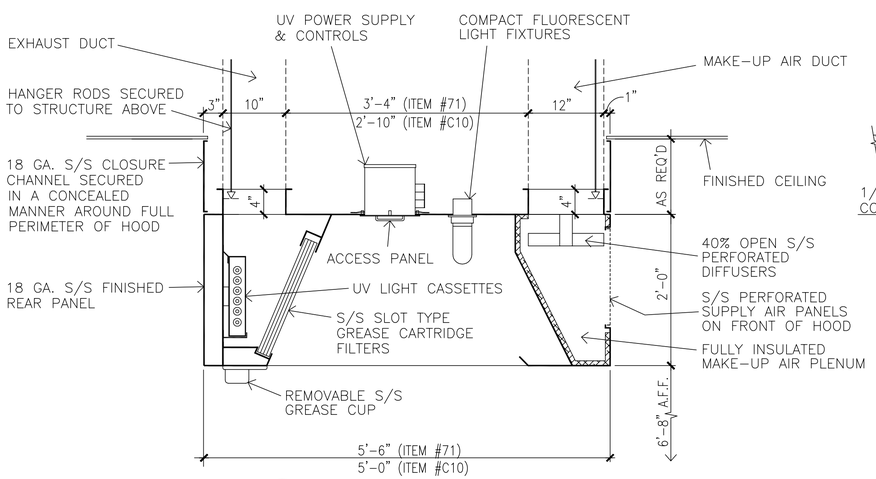

A1 / QF502 EXHAUST HOOD SECTION
SCALE: NONE (ITEMS #71 & #C10)

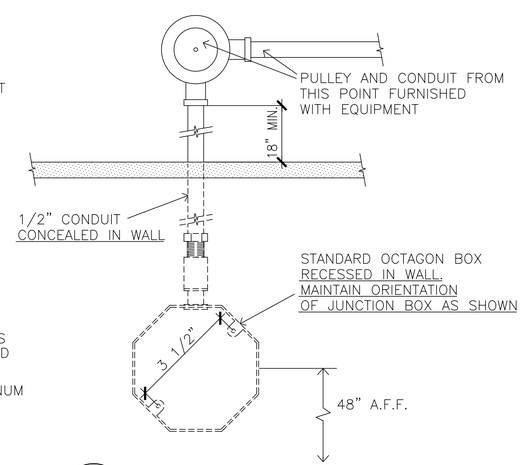

A2 / QF502 REMOTE PULL STATION
SCALE: NONE

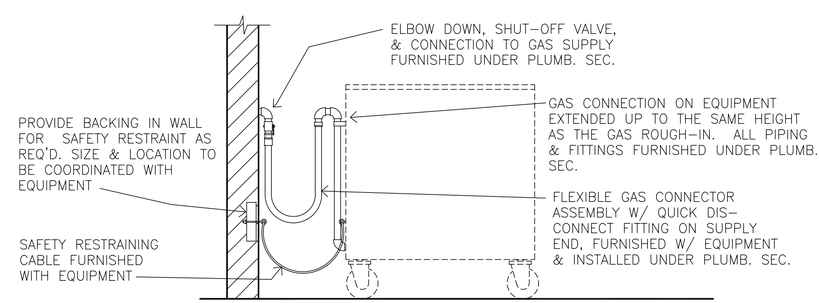

A4 / QF502 GAS CONNECTOR DETAIL
SCALE: NONE

US Army Corps of Engineers
Norfolk District

MARK	DATE	DESCRIPTION	BY	APP

DATE: 12/11/09
SCALE: AS NOTED
CHECKED: JK
SUBMITTED: JK
NORFOLK DISTRICT FILE NO. —
SPECIFICATION NO. —
DESIGNED: JK
DRAWN: JK, TJT
PROJECT NO. —
DRAWING NO. QF502
Last Revised: 12-11-09
File name: QF502.DWG
Plot scale: 1:1

NORFOLK DISTRICT
CORPS OF ENGINEERS
NORFOLK, VIRGINIA

NAO CENTER OF STANDARDIZATION

US ARMY STANDARD DESIGN
800 SOLDIER PERMANENT PARTY DINING FACILITY

FOOD SERVICE DETAILS

SHEET REFERENCE NUMBER
QF502
SHEET OF

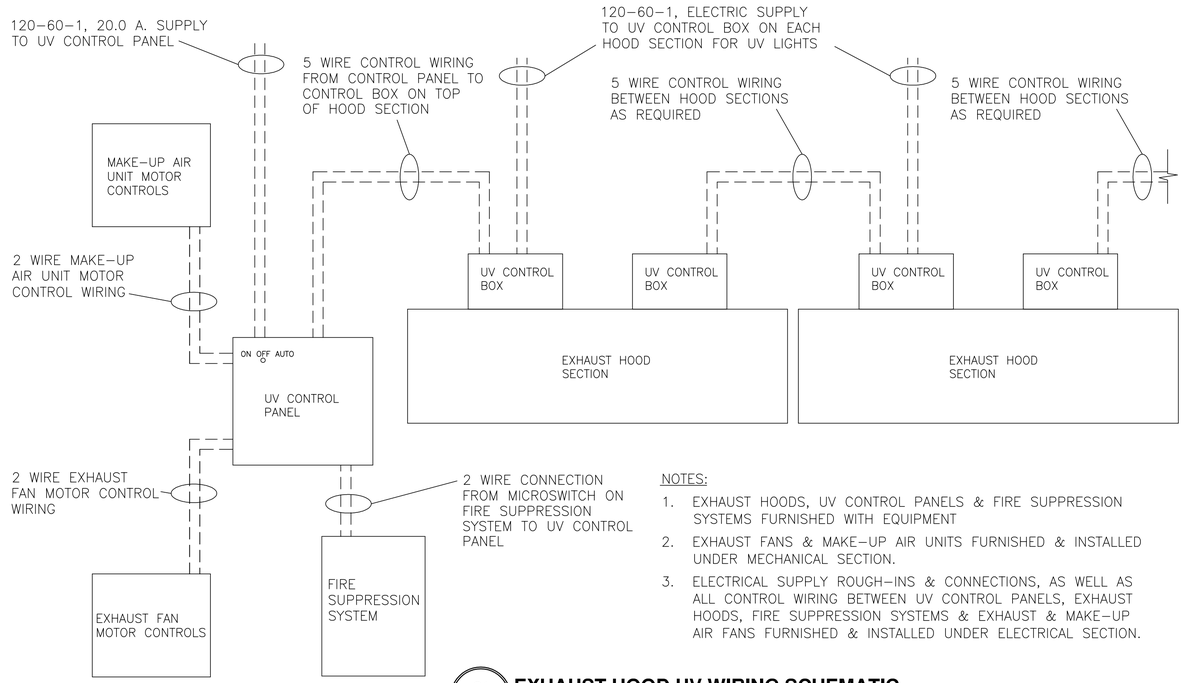

NOTES:

1. EXHAUST HOODS, UV CONTROL PANELS & FIRE SUPPRESSION SYSTEMS FURNISHED WITH EQUIPMENT
2. EXHAUST FANS & MAKE-UP AIR UNITS FURNISHED & INSTALLED UNDER MECHANICAL SECTION.
3. ELECTRICAL SUPPLY ROUGH-INS & CONNECTIONS, AS WELL AS ALL CONTROL WIRING BETWEEN UV CONTROL PANELS, EXHAUST HOODS, FIRE SUPPRESSION SYSTEMS & EXHAUST & MAKE-UP AIR FANS FURNISHED & INSTALLED UNDER ELECTRICAL SECTION.

C1 / QF503 EXHAUST HOOD UV WIRING SCHEMATIC
SCALE: NONE

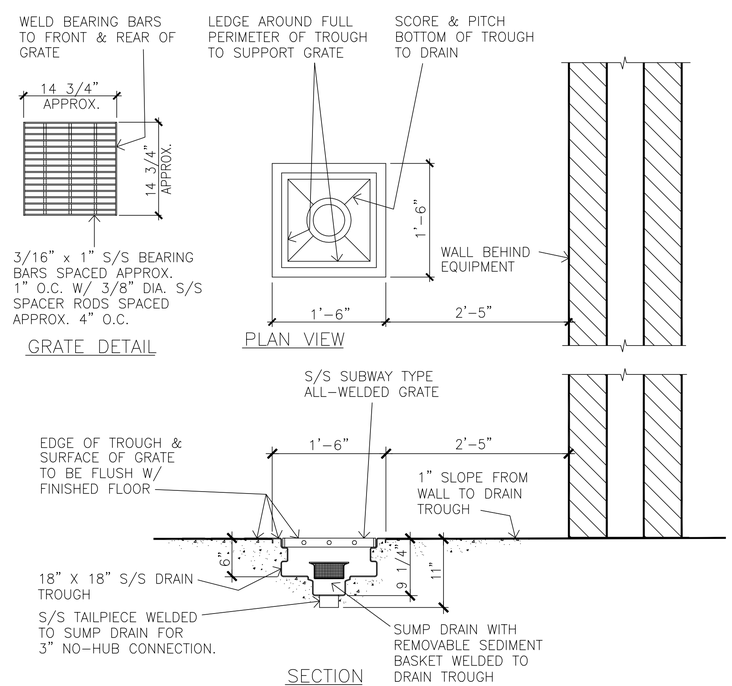

A1 / QF503 DRAIN TROUGH AT KETTLES
SCALE: NONE

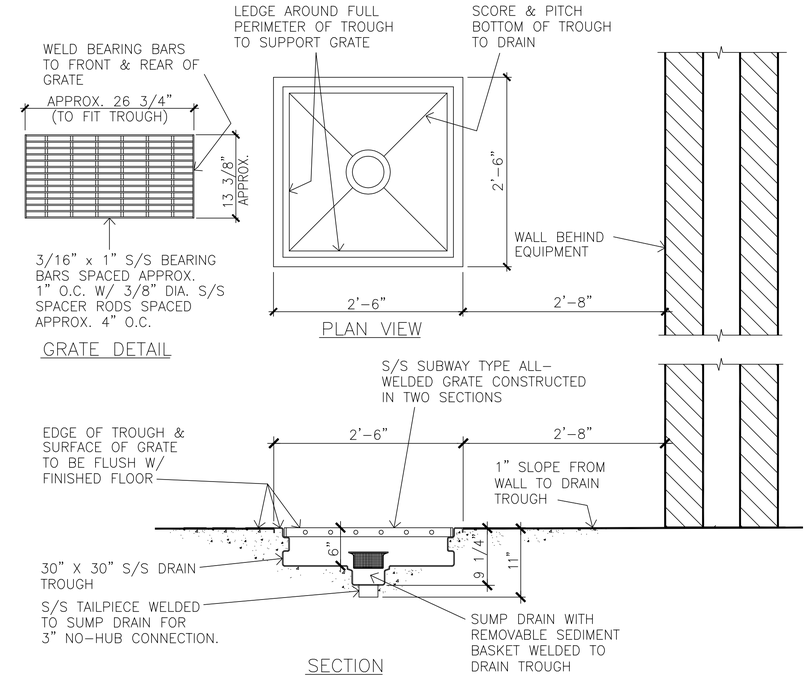

C3 / QF503 DRAIN TROUGH AT BRAISING PANS
SCALE: NONE

NOTE:

1. ALL PIPING, UNIONS, INSULATION AND GATE OR BALL VALVES FURNISHED & INSTALLED UNDER PLUMBING SECTION.
2. PRESSURE RELIEF VALVE, TEMPERATURE/ PRESSURE GAUGES & SHOCK ABSORBER FURNISHED WITH BOOSTER HEATER & INSTALLED UNDER PLUMBING SECTION.

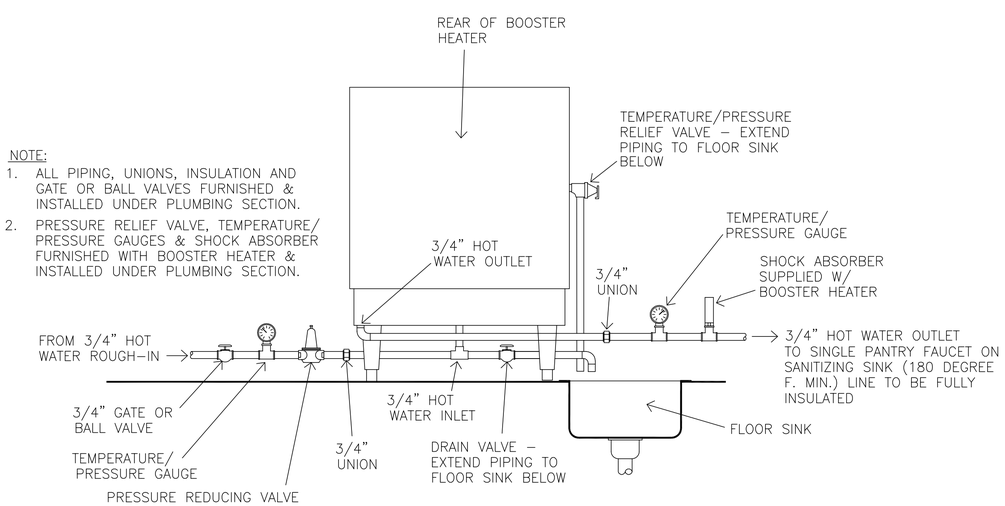

A3 / QF503 BOOSTER HEATER PIPING
SCALE: NONE

US Army Corps of Engineers
Norfolk District

SYMBOL	DATE	DESCRIPTION	BY	APP

DESIGNED: JK | CHECKED: JK | DATE: 12/11/09
DRAWN: JK, TJT | SUBMITTED: JK | SCALE: AS NOTED
PROJECT NO. — | NORFOLK DISTRICT FILE NO. —
DRAWING NO. QF503 | SPECIFICATION NO. —
Last Worked at Plot Scale: 1:1
File name: QF503.DWG

NORFOLK DISTRICT
CORPS OF ENGINEERS
NORFOLK, VIRGINIA

NAO CENTER OF STANDARDIZATION

US ARMY STANDARD DESIGN
800 SOLDIER PERMANENT PARTY DINING FACILITY

FOOD SERVICE DETAILS

SHEET REFERENCE NUMBER
QF503
SHEET OF

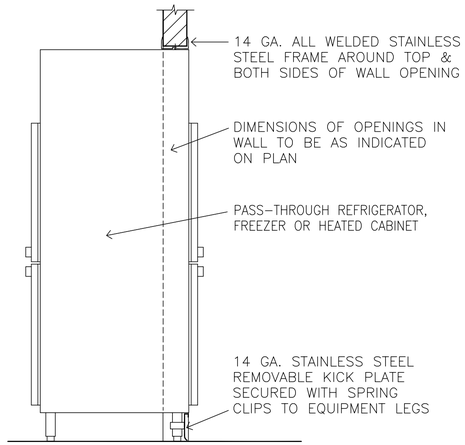

C1 / QF504 PASS THROUGH CABINET SECTION
SCALE: NONE

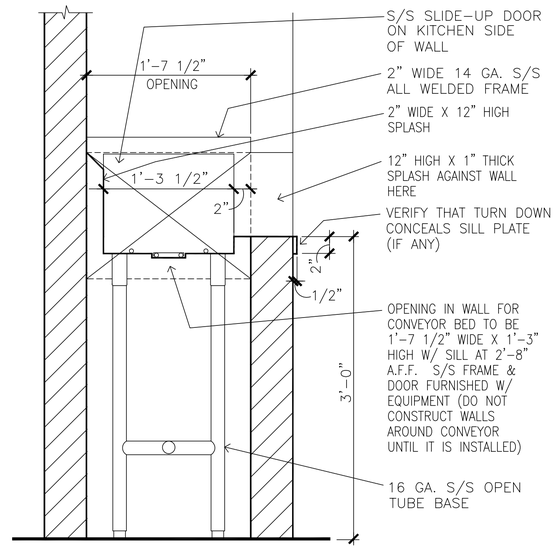

C2 / QF504 TRAY RETURN SECTION
SCALE: NONE

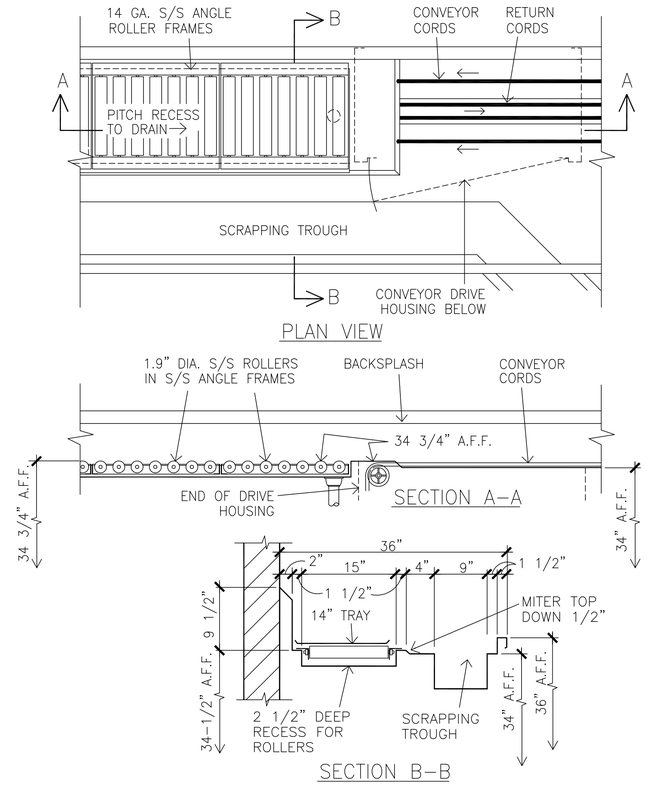

B4 / QF504 SOILED TRAY CONVEYOR DETAILS
SCALE: NONE

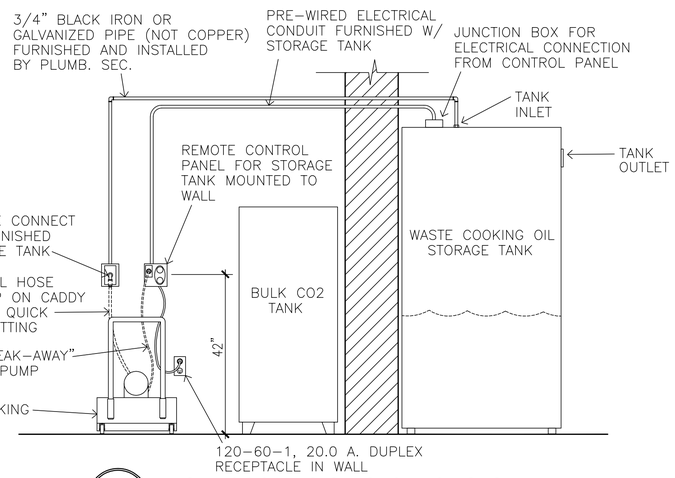

B1 / QF504 WASTE COOKING OIL STORAGE SYSTEM
SCALE: NONE

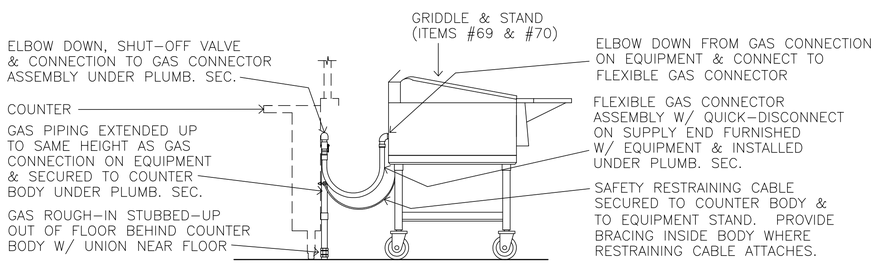

A1 / QF504 GAS CONNECTOR DETAIL
SCALE: NONE

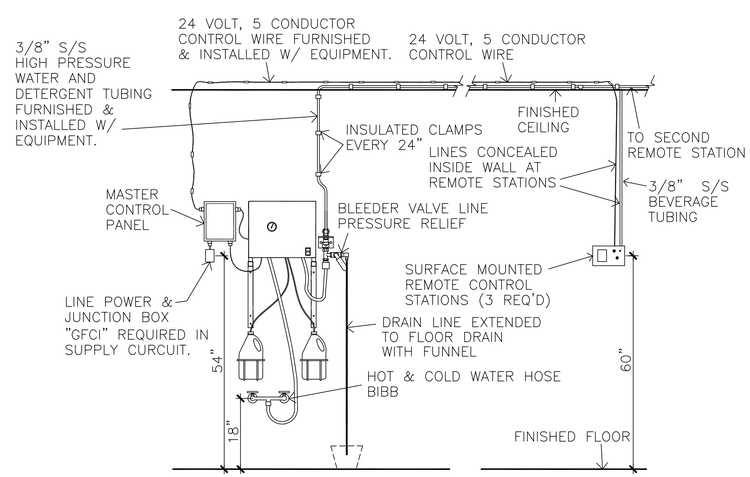

A3 / QF504 CENTRAL PRESSURE CLEANING SYSTEM
SCALE: NONE

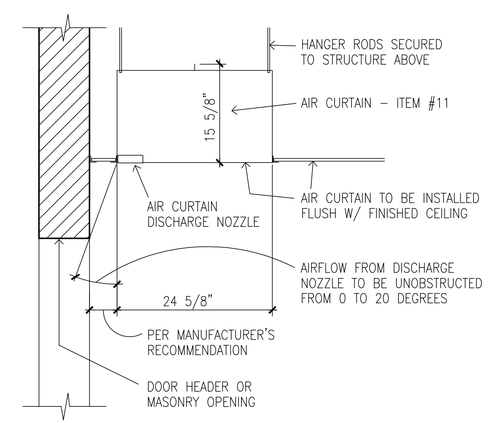

A4 / QF504 AIR CURTAIN SECTION
SCALE: NONE

US Army Corps of Engineers
Norfolk District

MARK	DATE	DESCRIPTION	BY	APP

DATE: 12/11/09
SCALE: AS NOTED
NORFOLK DISTRICT FILE NO. —
SPECIFICATION NO. —
Plot scale: 1:1

DESIGNED: JK
DRAWN: JK,TJT
PROJECT NO. —
CHECKED: JK
SUBMITTED: JK
DRAWING NO. QF504
Last revised: 12-11-09
File name: QF504.DWG

NORFOLK DISTRICT
CORPS OF ENGINEERS
NORFOLK, VIRGINIA

NAO CENTER OF STANDARDIZATION

US ARMY STANDARD DESIGN
800 SOLDIER PERMANENT PARTY DINING FACILITY

FOOD SERVICE DETAILS

SHEET REFERENCE NUMBER
QF504
SHEET OF

ITEM NUMBER	QTY.	DESCRIPTION	EQUIP. CLASS	COMMENTS	ELECTRICAL SCHEDULE: ELEC. SYMBOL	VOLTS	PHASE	AMPS	CONN.	HT. A.F.F.	REMARKS	PLUMBING SCHEDULE: PLUMBING SYMBOL	H.W.	C.W.	WASTE SIZE	WASTE TYPE	GAS	GAS MBTU	HT. A.F.F.	REMARKS	VENTILATION SCHEDULE: VENTILATION SYMBOL	QTY.	EXHAUST COLLAR	EXHAUST CFM	SUPPLY COLLAR	SUPPLY CFM	STATIC PRESSURE	HT. A.F.F.
1	1	RECEIVING SCALE ON MOBILE STAND	C	DIAL INDICATING SCALE, 100 LB. CAPACITY																								
2	1	RECEIVING DESK	C	SINGLE PEDESTAL STEEL DESK	2A	120	1	10.0	D.R.	24"	CONVENIENCE RECEPTACLE																	
3	4	SHELVING UNITS, NON FOOD	C	18" X 36" AND 18" X 42" MOBILE SHELVING UNITS																								
4	2	PLATFORM TRUCKS	C	28" X 60" ALUMINUM PLATFORM																								
5	43	SHELVING UNITS	C	24" X 48" MOBILE SHELVING UNITS																								
6	1	FREEZER COND. UNIT & EVAPORATORS	A		6A	208	3	24.5	J.B.	4"	CONNECT TO CONDENSING UNIT & FROM CONDENSING UNIT TO EVAPORATOR INSIDE WALK-IN – SEE WALK-IN NOTES																	
7	3	REFRIGERATOR COND. UNITS & EVAPORATORS	A		7A	208	3	5.8	J.B.	4"	CONNECT TO CONDENSING UNIT – SEE WALK-IN NOTES																	
					7B	120	1	5.4	J.B.	120"	CONNECT TO EVAPORATOR INSIDE WALK-IN																	
8	4	DOORWAY CLOSURES	A																									
9	4	FAUCET HOSE STATIONS	A									9A	1/2"						48"	140 DEGREES F. MIN. – CONNECT TO MIXING VALVE, INLETS 6" O.C.								
												9B		1/2"					48"	CONNECT TO MIXING VALVE, INLETS 6" O.C.								
10	1	WALK-IN REFRIGERATORS & FREEZER	A		10A	120	1	12.0	J.B.	113"	CONNECT TO J.B. IN WALK-IN FOR P.W. DOOR LIGHT, DOOR HEATER & FIELD WIRED CENTER LIGHTS, PRESSURE RELIEF PORT AND DRAIN LINE HEAT TAPE	10A			2"	F.F.D.			S.U.	EXTEND DRAIN LINE FROM 5 EVAPORATORS INSIDE WALK-IN AND FROM URN STAND – ITEM #97								
					10B	120	1	7.0	J.B.	113"	CONNECT TO J.B. IN WALK-IN FOR P.W. DOOR LIGHT, DOOR HEATER & FIELD WIRED CENTER LIGHTS																	
11	4	AIR CURTAINS	A		11A	120	1	14.4	J.B.	104"	CONNECT TO DOOR SWITCHES, AND FROM SWITCHES TO AIR CURTAIN																	
					11B	120	1	14.4	J.B.	–	J.B. ABOVE FINISHED CEILING. CONNECT TO AIR CURTAIN. ALSO INTERWIRE FROM AIR CURTAIN TO DOOR SWITCHES AND TO REMOTE SPEED SELECTOR SWITCH.																	
					11C						NOT USED																	
12	2	FLOOR TROUGHS W/ GRATES	A									12A			3"	DIRECT			S.U.	CONNECT TO RECESSED TROUGH IN FLOOR – SEE DETAIL #C4/QF501								
12a	3	CAN RACKS	C																									
13	1	DUNNAGE RACK	C																									
14	1	VEGETABLE PREP SINK	A		14A	120	1	10.0	D.R.	52"	CONVENIENCE RECEPTACLE	14A	1/2"						18"	CONNECT TO FAUCET								
												14B			2"	12" X 12" F.S.			S.U.	EXTEND DRAIN LINE FROM SINK								
												14C		1/2"					18"	CONNECT TO FAUCET								
												14D			3"	12" X 12" F.S.			S.U.	EXTEND DRAIN LINE FROM 2 SINKS								
15	2	DISPOSERS	A		15A	208	3	8.4	J.B.	24"	CONNECT TO SWITCH & FROM SWITCH TO DISPOSER & SOLENOID VALVE	15A			3'	DIRECT			8"	CONNECT TO DISPOSER								
												15B		1/2"					–	CONNECT FROM PRE-RINSE SPRAY C.W. ROUGH-IN – SEE #52A								
16	1	REFRIGERATOR, ROLL-IN	A	ONE SECTION, W/ MOBILE RACK	16A	120	1	10.6	J.B.	–	PROVIDE J.B. ABOVE CEILING & PENDANT CORD WITH D.R. AT 78" A.F.F.																	
17	2	TABLES	C		17A	120	1	15.0	J.B.	–	PROVIDE J.B. ABOVE CEILING & PENDANT CORD WITH CONVENIENCE D.R. AT 78" A.F.F.																	
18	–	NOT USED	–																									
19	3	EQUIPMENT STANDS	C																									
20	1	STORAGE SHELVING SYSTEM	A																									
21	2	TABLES W/ SINK	A		21A	120	1	15.0	J.B.	–	PROVIDE J.B. ABOVE CEILING & PENDANT CORD WITH CONVENIENCE D.R. AT 78" A.F.F.	21A		1/2"					S.U.	CONNECT TO FAUCET								
												21B			2"	12" X 12" F.S.			S.U.	EXTEND DRAIN LINE FROM SINK								
												21C	1/2"						S.U.	CONNECT TO FAUCET								
22	2	MEAT SLICING MACHINES	C		22A	120	1	6.0	J.B.	–	PROVIDE J.B. ABOVE CEILING & PENDANT CORD WITH D.R. AT 78" A.F.F.																	
23	1	VEGETABLE PEELING MACHINE	A	60 LB. W/ DISPOSER AND STAND	23A	208	3	3.8	J.B.	24"	CONNECT TO PEELER	23A			2"	DIRECT			8"	CONNECT TO DISPOSER BELOW PEELER								
					23B	208	1	7.7	J.B.	24"	CONNECT TO DISPOSER BELOW PEELER	23B		1/2"					24"	CONNECT TO COMMON WATER CONNECTION ON PEELER/DISPOSER UNIT								
24	1	WASTE PULPER	A	CLOSE-COUPLED PULPER & EXTRACTOR	24A	480	3	20.0	J.B.	60"	CONNECT TO WALL MOUNTED CONTROL PANEL & FROM CONTROL PANEL TO WASTE PULPER	24A			3"	12" X 12" F.S.			S.U.	PROVIDE 3/4 GRATE AND EXTEND DRAIN LINE FROM DRAIN VALVE ON PULPER								
												24B		1/2"					18"	CONNECT TO PULPER. 60 G.P.H. REQUIRED AT 30 P.S.I.								
												24C	1/2"						18"	CONNECT TO PULPER. 60 G.P.H. REQUIRED AT 30 P.S.I.								
25	1	FOOD PROCESSOR	C		25A	120	1	10.0	D.R.	48"																		
26	2	POT RACKS	A	OVERHEAD RACK MOUNTED ON ITEM #21																								
27	1	RANGE	A	6 BURNER, HEAVY DUTY	27A	120	1	1.0	D.R.	24"	ELECTRONIC IGNITION	27A					3/4"	250	30"	CONNECT TO GAS SUPPLY WITH FLEXIBLE CONNECTOR ASSEMBLY FURNISHED WITH EQUIPMENT. SEE DETAIL #A4/QF502								

US Army Corps of Engineers
Norfolk District

MARK	DATE	DESCRIPTION	BY	APP.

DATE: 12/11/09
SCALE: NONE
CHECKED: JK
SUBMITTED: JK
NORFOLK DISTRICT FILE NO. –
SPECIFICATION NO. –
DESIGNED: JK
DRAWN: JK,TJT
PROJECT NO. –
DRAWING NO. QF601
Last revised on: 12-11-09
File name: QF601.DWG
Plot scale: 1:1

NORFOLK DISTRICT
CORPS OF ENGINEERS
NORFOLK, VIRGINIA

NAO CENTER OF STANDARDIZATION

US ARMY STANDARD DESIGN
800 SOLDIER PERMANENT PARTY DINING FACILITY

FOOD SERVICE EQUIPMENT SCHEDULES

SHEET REFERENCE NUMBER
QF601
SHEET OF

					ELECTRICAL SCHEDULE							PLUMBING SCHEDULE									VENTILATION SCHEDULE							
ITEM NUMBER	QTY.	DESCRIPTION	EQUIP. CLASS	COMMENTS	ELEC. SYMBOL	VOLTS	PHASE	AMPS	CONN.	HT. A.F.F.	REMARKS	PLUMBING SYMBOL	H.W.	C.W.	WASTE SIZE	WASTE TYPE	GAS	GAS MBTU	HT. A.F.F.	REMARKS	VENTILATION SYMBOL	QTY.	EXHAUST COLLAR	EXHAUST CFM	SUPPLY COLLAR	SUPPLY CFM	STATIC PRESSURE	HT. A.F.F.
28	2	BRAISING PANS	A	40 GALLONS	28A	120	1	10.0	D.R.	18"	BRAISING PAN CONTROLS	28A					3/4"	200	12"	CONNECT TO BRAISING PAN								
29	1	CENTRAL PRESSURE CLEANING SYSTEM	A		29A	208	1	9.0	J.B.	54"	CONNECT TO MASTER CONTROL PANEL FOR CENTRAL PRESSURE CLEANING SYSTEM (GFCI PROTECTION REQUIRED). ALSO EXTEND 24 VOLT CONTROL WIRING (FIVE CONDUCTOR, DOUBLE INSULATED) FROM MASTER CONTROL PANEL TO #29B REMOTE CONTROL PANELS (THREE PLACES). SEE DETAIL #A3/QF504	29A	1/2"						18"	PROVIDE HOT AND COLD WATER HOSE BIBB. SEE DETAIL #A3/QF504							
					29B				E.C.	60"	EXTEND 24 VOLT CONTROL WIRING (FIVE CONDUCTOR, DOUBLE INSULATED) FROM MASTER CONTROL PANEL ON CENTRAL PRESSURE CLEANING SYSTEM AND CONNECT TO REMOTE CONTROL PANEL. SEE DETAIL #A3/QF504	29B		1/2"					18"	PROVIDE HOT AND COLD WATER HOSE BIBB. SEE DETAIL #A3/QF504							
												29C			2"	F.F.D.			S.U.	EXTEND DRAIN LINE FROM BLEEDER VALVE LINE PRESSURE RELIEF VALVE. SEE DETAIL #A3/QF504								
												29D							54"	EXTEND 3/8" STAINLESS STEEL HIGH PRESSURE WATER AND DETERGENT TUBING FROM CENTRAL PRESSURE CLEANING SYSTEM TO HOSE OUTLETS AT REMOTE STATIONS #29E (THREE PLACES). HIGH PRESSURE TUBING SHALL BE EXTENDED ABOVE FINISHED CEILING AND SHALL BE SECURED W/ CUSHIONED STRAPS 24" ON CENTER. SEE DETAIL #A3/QF504								
												29E							60"	REMOTE OUTLET FOR CENTRAL PRESSURE CLEANING SYSTEM. EXTEND 3/8" STAINLESS STEEL HIGH PRESSURE WATER AND DETERGENT TUBING FROM #29D. SEE DETAIL #A3/QF504								
30	2	FLOOR TROUGHS W/ GRATE	A									30A			3"	DIRECT			S.U.	CONNECT TO RECESSED TROUGH IN FLOOR – SEE DETAIL #C3/QF503								
31	1	FREEZER	A	TWO SECTION, REACH-IN	31A	120	1	14.9	J.B.	–	PROVIDE J.B. ABOVE CEILING & PENDANT CORD WITH D.R. AT 90" A.F.F. – NEMA #5-20P PLUG FURNISHED ON FREEZER																	
32	2	CONVECTION OVENS	A	DOUBLE DECK	32A	120	1	6.0+6.0	D.R.	48"	OVEN FAN MOTORS	32A					3/4"	120	30"	MANIFOLD TWO OVEN DECKS TOGETHER & CONNECT TO GAS SUPPLY WITH FLEXIBLE CONNECTOR ASSEMBLY FURNISHED WITH EQUIPMENT. SEE DETAIL #A4/QF502								
32a	1	COMBINATION OVEN/STEAMER	A	ROLL-IN	32aA	120	1	15.0	D.R.	48"		32aA					1"	215	18"	CONNECT TO COMBINATION OVEN/STEAMER								
												32aB		3/4"					18"	CONNECT TO CONDENSER INLET, & THROUGH WATER FILTER TO STEAM GENERATOR INLET. 40-50 P.S.I. REQUIRED. WATER FILTER FURNISHED WITH EQUIPMENT & MOUNTED TO WALL AT 48" A.F.F. BACKFLOW PREVENTER REQUIRED.								
												32aC			2"	12" X 12" F.S.			S.U.	EXTEND DRAIN LINE FROM COMBINATION OVEN/STEAMER								
33	2	CAN OPENERS	C		–	120	1	1.2	–	–	PLUGS INTO #17A & #21A																	
34	1	MIXING MACHINE	A	60 QUART	34A	208	3	10	J.B.	–	PROVIDE J.B. ABOVE CEILING & PENDANT CORD WITH S.R. AT 78" A.F.F. ALSO FURNISH & INSTALL CORD & PLUG ON MIXER TO MATCH RECEPTACLE.																	
35	1	MIXING MACHINE	C	20 QUART	35A	120	1	8.2	J.B.	–	PROVIDE J.B. ABOVE CEILING & PENDANT CORD WITH D.R. AT 78" A.F.F.																	
36	1	KETTLE	A	40 GALLON	36A	120	1	10.0	D.R.	18"	KETTLE CONTROLS	36A					3/4"	140	18"	CONNECT TO KETTLE								
												36B		1/2"					36"	CONNECT TO FAUCET ON KETTLE								
												36C	1/2"						36"	CONNECT TO FAUCET ON KETTLE								
37	10	SHELVING UNITS	C	STATIONARY SHELVING UNITS																								
38	2	KETTLES W/ STAND	A	(2) 6 GALLON SELF-CONTAINED KETTLES W/ STAND	38A	480	3	19.6	J.B.	24"	CONNECT TO KETTLES	38A			2"	12" X 12" F.S.			S.U.	EXTEND DRAIN LINE FROM KETTLE STAND								
												38B		1/2"					24"	CONNECT TO FAUCET ON KETTLE STAND								
												38C	1/2"						24"	CONNECT TO FAUCET ON KETTLE STAND								
39	1	EXHAUST HOOD – ISLAND TYPE	A	(4) UV TYPE EXHAUST HOOD SECTIONS	39A	120	1	15.0	J.B.	48"	PROVIDE SWITCH IN WALL AT 48" A.F.F. AND EXTEND CONDUIT & WIRING IN A CONCEALED MANNER TO J.B.'S ON TOP EXTERIOR OF HOOD SECTIONS FOR INCANDESCENT HOOD LIGHTS										39A	4	10" X 25"	3060 EA.			1.60"	108"
					39B	120	1	12.0	E.C.	104"	CONNECT TO UV CONTROL BOX ON TOP OF EXHAUST HOOD SECTION FOR UV LIGHTS (4 PLACES). SEE UV WIRING SCHEMATIC DETAIL #C1/QF503										39B	8			12" X 19"	1,225 EA.	0.20"	108"
					39C	120	1	20.0	E.C.	60"	CONNECT TO UV CONTROL PANEL. ALSO PROVIDE CONTROL INTERWIRING FROM CONTROL PANEL TO UV CONTROL BOXES ON TOP OF EXHAUST HOOD SECTIONS, TO EXHAUST FAN, TO MAKE-UP AIR UNIT & TO FIRE SUPPRESSION SYSTEM – ITEM #41 AS REQUIRED. SEE UV WIRING SCHEMATIC DETAIL #C1/QF503																	

US Army Corps of Engineers
Norfolk District

MARK	DATE	DESCRIPTION	BY	APP

DATE: 12/11/09
SCALE: NONE
DESIGNED: JK
CHECKED: JK
DRAWN: JK,TJT
SUBMITTED: JK
PROJECT NO. –
NORFOLK DISTRICT FILE NO. –
SPECIFICATION NO. –
DRAWING NO. QF602
Last Revised: 12-11-09
File name: QF602.DWG
Plot scale: 1:1

NORFOLK DISTRICT
CORPS OF ENGINEERS
NORFOLK, VIRGINIA

NAO CENTER OF STANDARDIZATION

US ARMY STANDARD DESIGN
800 SOLDIER PERMANENT PARTY DINING FACILITY

FOOD SERVICE EQUIPMENT SCHEDULES

SHEET REFERENCE NUMBER
QF602
SHEET OF

ITEM NUMBER	QTY.	DESCRIPTION	EQUIP. CLASS	COMMENTS	ELECTRICAL SCHEDULE: ELEC. SYMBOL	VOLTS	PHASE	AMPS	CONN.	HT. A.F.F.	REMARKS	PLUMBING SCHEDULE: PLUMBING SYMBOL	H.W.	C.W.	WASTE SIZE	WASTE TYPE	GAS	GAS MBTU	HT. A.F.F.	REMARKS	VENTILATION SCHEDULE: VENTILATION SYMBOL	QTY.	EXHAUST COLLAR	EXHAUST CFM	SUPPLY COLLAR	SUPPLY CFM	STATIC PRESSURE	HT. A.F.F.
40	1	FLOOR TROUGH W/ GRATE	A									40A			3"	DIRECT			S.U.	CONNECT TO RECESSED TROUGH IN FLOOR – SEE DETAIL #A1/QF503								
41	1	FIRE SUPPRESSION SYSTEM	A	SERVES EXHAUST HOOD #39	41A	120	1	20.0	J.B.	96"	CONNECT TO MICROSWITCH ON WET CHEMICAL FIRE SUPPRESSION SYSTEM & RUN CONDUIT AND WIRE IN A CONCEALED MANNER TO FUEL AND POWER SHUT-OFF DEVICES FOR ALL APPLIANCES LOCATED UNDER THE EXHAUST HOOD. THIS SYSTEM SERVES ITEM #39. ALSO CONNECT TO BUILDING FIRE ALARM SYSTEM AS REQUIRED.																	
					41B				J.B.	48"	PROVIDE CONCEALED CONDUIT AND RECESSED JUNCTION BOX IN WALL FOR REMOTE MANUAL PULL STATION FOR FIRE SUPPRESSION SYSTEM. SEE DETAIL #A2/QF502																	
42	1	FRYERS & FILTER	A	BATTERY OF (3) 68 LB. FRYERS W/ FILTER SYSTEM	42A	120	1	1.0 + 1.0	D.R.	18"	FRYER CONTROLS FOR TWO FRYERS	42A					1"	402 TOTAL	30"	MANIFOLD 3 FRYERS TOGETHER & CONNECT TO GAS SUPPLY WITH FLEXIBLE CONNECTOR ASSEMBLY FURNISHED WITH EQUIPMENT. SEE DETAIL #A4/QF502								
					42B	120	1	1.0+5.6	D.R.	18"	FRYER CONTROLS FOR ONE FRYER & FILTER PUMP																	
43	1	FRYERS	A	BATTERY OF (2) 68 LB. FRYERS	43A	120	1	1.0 + 1.0	D.R.	18"	FRYER CONTROLS FOR TWO FRYERS	43A					1"	268 TOTAL	30"	MANIFOLD 2 FRYERS TOGETHER & CONNECT TO GAS SUPPLY WITH FLEXIBLE CONNECTOR ASSEMBLY FURNISHED WITH EQUIPMENT. SEE DETAIL #A4/QF502								
44	1	FILTER STATION	A	CONNECTED TO ITEM #43	44A	120	1	5.6 + 4.0	D.R.	18"	FILTER PUMP & HEAT LAMPS																	
45	2	POT FILLER/SPRAY HOSE ASSEMBLIES	A									45A	1/2"						48"	CONNECT TO WALL MOUNTED FAUCET, INLETS 8" O.C.								
												45B		1/2"					48"	CONNECT TO WALL MOUNTED FAUCET, INLETS 8" O.C.								
46	1	TABLE, BAKERS	C		46A	120	1	15.0	J.B.	–	PROVIDE J.B. ABOVE CEILING & PENDANT CORD WITH CONVENIENCE D.R. AT 78" A.F.F.																	
47	1	STEAMER	A	W/(2) COMPARTMENTS, W/ (8) 2-1/2" DEEP PANS PER COMPARTMENT	47A	120	1	1.0	J.B.	18"	CONNECT TO STEAMER	47A			2"	12" X 12" F.S.			S.U.	EXTEND DRAIN LINE FROM STEAMER								
												47B					1"	300	12"	CONNECT TO STEAMER								
												47C		3/4"					18"	CONNECT TO CONDENSER INLET, & THROUGH WATER FILTER TO STEAM GENERATOR INLET. 35-60 P.S.I. REQUIRED. WATER FILTER FURNISHED WITH EQUIPMENT & MOUNTED TO WALL AT 48" A.F.F. BACKFLOW PREVENTER REQUIRED.								
48	7	HAND SINKS	A									48A	1/2"						24"	CONNECT TO FAUCET								
												48B			1-1/2"	DIRECT			20"	CONNECT TO SINK								
												48C		1/2"					24"	CONNECT TO FAUCET								
49	3	INGREDIENT BINS, MOBILE	C																									
50	1	UTENSIL WASHER	A	W/ BUILT-IN BOOSTER HEATER	50A	480	3	22.0	J.B.	24"	CONNECT TO UTENSIL WASHER	50A			3"	12" X 12" F.S.			S.U.	EXTEND DRAIN LINES FROM UTENSIL WASHER AND FROM EXHAUST HOOD – ITEM #55								
					50B	480	3	34.0	J.B.	24"	CONNECT TO BOOSTER HEATER CONNECTION ON UTENSIL WASHER	50B	1"						12"	CONNECT TO UTENSIL WASHER. 140 DEGREES F. MIN. AT 20-22 P.S.I. REQUIRED								
51	1	POT & PAN SINK	A	W/ RECIRCULATION UNIT ON WASH COMPARTMENT	51A	480	3	11.6	J.B.	18"	CONNECT TO POWER SOAK CONTROL PANEL	51A	3/4"						18"	CONNECT TO FAUCET								
												51B		3/4"					18"	CONNECT TO FAUCET								
												51C			2"	DIRECT			15"	CONNECT DRAIN LINE TO 3 SINKS & EXTEND TO GREASE INTERCEPTOR AS REQ'D.								
51a	1	BOOSTER HEATER	A	TO HEAT WATER TO FILL RINSE COMPARTMENT	51aA	480	3	21.7	J.B.	12"	CONNECT TO BOOSTER HEATER	51aA	3/4"						18"	CONNECT TO BOOSTER HEATER. 140 DEGREES F. MIN. REQUIRED								
												51aB	3/4"						6"	H.W. OUTLET ON BOOSTER HEATER. CONNECT TO SINGLE PANTRY FAUCET OVER SANITIZING SINK COMPARTMENT WITH INSULATED LINE								
												51aC			2"	12" X 12" F.S.			S.U.	EXTEND DRAIN LINES FROM BOOSTER HEATER, FROM SINK HEATER – ITEM #54 AND FROM EXHAUST HOOD – ITEM #53								
52	4	PRE-RINSE SPRAYS	A									52A		3/4"					18"	CONNECT TO FAUCET & DISPOSER								
												52B	1/2"						18"	CONNECT TO FAUCET								
												52C		1/2"					18"	CONNECT TO FAUCET								
53	1	EXHAUST HOOD	A	CONDENSATE HOOD OVER RINSE COMPARTMENT								–			1/2"	INDIRECT			80"	EXTEND CONDENSATE DRAIN LINE FROM EXHAUST HOOD TO F.S. #51aC	53A	1	7" X 7"	600			0.25"	108"
54	1	SINK HEATER	A	TO MAINTAIN HEAT IN RINSE COMPARTMENT	54A	208	3	25.0	J.B.	12"	CONNECT TO SINK HEATER																	
55	1	EXHAUST HOOD	A	CONDENSATE HOOD OVER UTENSIL WASHER								–			1/2"	INDIRECT			96"	EXTEND CONDENSATE DRAIN LINE FROM EXHAUST HOOD TO F.S. #50A	55A	1	8" X 8"	750			0.25"	124"

US Army Corps of Engineers
Norfolk District

MARK	DATE	DESCRIPTION	BY	APP

DATE: 12/11/09
SCALE: NONE
CHECKED: JK
SUBMITTED: JK
NORFOLK DISTRICT FILE NO. —
SPECIFICATION NO. —
DESIGNED: JK
DRAWN: JK,TJT
PROJECT NO. —
DRAWING NO. QF603
Last revised on 12-11-09
Plot scale: 1:1
File name: QF603.DWG

NORFOLK DISTRICT
CORPS OF ENGINEERS
NORFOLK, VIRGINIA

NAO
CENTER OF STANDARDIZATION

US ARMY STANDARD DESIGN
800 SOLDIER PERMANENT PARTY
DINING FACILITY

FOOD SERVICE EQUIPMENT SCHEDULES

SHEET REFERENCE NUMBER
QF603
SHEET OF

ITEM NUMBER	QTY.	DESCRIPTION	EQUIP. CLASS	COMMENTS	ELECTRICAL SCHEDULE: ELEC. SYMBOL	VOLTS	PHASE	AMPS	CONN.	HT. A.F.F.	REMARKS	PLUMBING SCHEDULE: PLUMBING SYMBOL	H.W.	C.W.	WASTE SIZE	WASTE TYPE	GAS	GAS MBTU	HT. A.F.F.	REMARKS	VENTILATION SCHEDULE: VENTILATION SYMBOL	QTY.	EXHAUST COLLAR	EXHAUST CFM	SUPPLY COLLAR	SUPPLY CFM	STATIC PRESSURE	HT. A.F.F.
56	7	POT & PAN RACKS	C																									
56a	1	MIXER ACCESSORY RACK	C																									
57	3	CASHIER STATIONS	A																									
58	2	COLD PANS (5 WELLS)	A		58A	120	1	10.7	D.R.	4"		58A			2"	F.F.D.			S.U.	EXTEND DRAIN LINES FROM COLD PAN, DRAIN VALVE ON HOT FOOD WARMER – ITEM #110 AND FROM DRAIN VALVES ON TWO SOUP WELLS – ITEM #59								
												58B			2"	F.F.D.			S.U.	EXTEND DRAIN LINES FROM TWO COLD PANS								
59	2	SOUP WELLS, DROP-IN	A		59A	120	1	6.9+6.9	J.B.	S.U.	CONNECT TO TWO SOUP WELLS	–			3/4"	INDIRECT			23"	EXTEND DRAIN LINE FROM DRAIN VALVE TO #58A								
60	2	BREAD CABINETS	A		60A	120	1	1.0	D.R.	48"																		
					60B	120	1	1.0	D.R.	4"																		
61	16	DISH DISPENSERS, DROP-IN	A																									
62	8	PLATE DISPENSERS	C		62A	120	1	10.0	D.R.	24"	CONVENIENCE RECEPTACLE																	
63	1	COLD PAN (4 WELLS)	A		63A	120	1	7.8	D.R.	4"		–			3/4"	INDIRECT			23"	EXTEND DRAIN LINE TO #58B								
64	5	SNEEZE GUARDS	A		64A	120	1	6.0	J.B.	4"	CONNECT TO FLUORESCENT LIGHTS IN (3) SNEEZE GUARDS																	
					64B	120	1	5.0	J.B.	4"	CONNECT TO FLUORESCENT LIGHTS IN (2) SNEEZE GUARDS																	
65	1	SALAD BAR COUNTER	A																									
66	1	HOT FOOD WARMER (6 WELLS)	A		66A	208	1	24.5	S.R.	4"	NEMA #L6-50P PLUG FURNISHED ON EQUIPMENT	66A			2"	F.F.D.			S.U.	EXTEND DRAIN LINE FROM DRAIN VALVE ON HOT FOOD WARMER								
												66B	1/2"						S.U.	CONNECT TO FILL FAUCET								
67	6	COUNTER PROTECTORS	A		67A	120	1	3.0	J.B.	4"	CONNECT TO FLUORESCENT LIGHTS IN COUNTER PROTECTOR																	
68	1	ENTREE COUNTER	A		68A	120	1	10.0+10.0	J.B.	4"	CONNECT TO J.B. IN BASE FOR 2 P.W. CONVENIENCE D.R.'S IN COUNTER																	
69	2	GRIDDLES	A									69A					3/4"	120	S.U.	EXTEND GAS PIPING UP TO HEIGHT OF CONNECTION ON GRIDDLE AND CONNECT TO GAS SUPPLY WITH FLEXIBLE CONNECTOR ASSEMBLY FURNISHED WITH EQUIPMENT. SEE DETAIL #A1/QF504								
70	2	GRIDDLE STANDS	A																									
70a	2	SPLASH GUARDS	A																									
71	2	EXHAUST HOODS – ISLAND TYPE	A	UV TYPE	71A	120	1	4.0 TOTAL	J.B.	48"	PROVIDE SWITCH IN WALL AT 48" A.F.F. AND EXTEND CONDUIT & WIRING IN A CONCEALED MANNER TO J.B.'S ON TOP EXTERIOR OF BOTH HOODS OVER GRIDDLES FOR INCANDESCENT HOOD LIGHTS										71A	2	10" X 17"	2,100 EA.			1.60"	108"
					71B	120	1	6.0	E.C.	104"	CONNECT TO UV CONTROL BOX ON TOP OF EXHAUST HOOD FOR UV LIGHTS. SEE UV WIRING SCHEMATIC DETAIL #C1/QF503										71B	2			12" X 24"	1,680 EA.	0.20"	108"
					71C	120	1	20.0	E.C.	60"	CONNECT TO UV CONTROL PANEL. ALSO PROVIDE CONTROL INTERWIRING FROM CONTROL PANEL TO UV CONTROL BOXES ON TOP OF EXHAUST HOODS #71, #71a & #139 (FOUR HOODS), TO EXHAUST FAN(S), TO MAKE-UP AIR UNIT(S) & TO FIRE SUPPRESSION SYSTEM – ITEM #140 AS REQUIRED. SEE UV WIRING SCHEMATIC DETAIL #_____																	
71a	1	EXHAUST HOOD – WALL TYPE	A	UV TYPE	71aA	120	1	2.0	J.B.	48"	PROVIDE SWITCH IN WALL AT 48" A.F.F. AND EXTEND CONDUIT & WIRING IN A CONCEALED MANNER TO J.B. ON TOP EXTERIOR OF EXHAUST HOOD FOR INCANDESCENT HOOD LIGHTS										71aA	1	10" X 12"	1,530			1.60"	108"
					71aB	120	1	6.0	J.B.	108"	CONNECT TO UV CONTROL BOX ON TOP OF EXHAUST HOOD FOR UV LIGHTS. SEE UV WIRING SCHEMATIC DETAIL #C1/QF503										71aB	1	12" X 24"	1,225			0.20"	108"
72	–	NOT USED	–																									
73	1	PASS THRU HEATED CABINET	A	TWO SECTION REACH-IN	73A	120/208	1	19.8	J.B.	88"	CONNECT TO PASS-THRU HEATED CABINET																	
74	2	PASTRY STORAGE CABINETS	C																									
75	1	DESSERT COUNTER	A		75A	120	1	10.0	J.B.	4"	CONNECT TO J.B. IN BASE FOR P.W. CONVENIENCE D.R. IN COUNTER																	
					75B	120	1	10.0	D.R.	48"	CONVENIENCE RECEPTACLE																	
76	1	COLD PAN (3 WELLS)	A		76A	120	1	6.0	D.R.	4"		76A			2"	F.F.D.			S.U.	EXTEND DRAIN LINE FROM COLD PAN								
77	1	DOUBLE DECK DISPLAY STAND	A		77A	120	1	4.0	J.B.	18"	CONNECT TO FLUORESCENT LIGHTS IN DOUBLE DECK DISPLAY																	
78	1	PASS THRU REFRIGERATOR	A	TWO SECTION REACH-IN	78A	120	1	11.0	D.R.	88"																		
79	2	TOASTERS	C		79A	208	1	24.0	S.R.	4"	VERIFY ELECTRICAL REQUIREMENTS W/ GOVERNMENT FURNISHED EQUIPMENT																	
80	1	BEVERAGE COUNTER W/ TROUGH	A	IN SERVING AREA								80A			2"	F.F.D.			S.U.	EXTEND DRAIN LINE FROM TROUGH IN COUNTER								
81	1	BEVERAGE COUNTER W/ TROUGHS	A	IN DINING ROOM	81A	120	1	10.0	D.R.	4"	CONVENIENCE RECEPTACLE	–				INDIRECT			32"	EXTEND DRAIN LINES FROM TWO DRIP TROUGHS TO #84B								
82	3	JUICE DISPENSERS	C	BULK JUICE DISPENSERS	82A	120	1	15.0	D.R.	18"		–		1/2"					34"	CONNECT C.W. FROM #99A								
					82B	120	1	15.0	D.R.	4"		–		1/2"					34"	CONNECT C.W. FROM #84A								

US Army Corps of Engineers
Norfolk District

MARK	DATE	DESCRIPTION	BY	APP.

DATE: 12/11/09
SCALE: NONE
CHECKED: JK
SUBMITTED: JK
NORFOLK DISTRICT FILE NO. –
SPECIFICATION NO. –
DESIGNED: JK
DRAWN: JK, TJT
PROJECT NO. –
DRAWING NO. QF604
Last Revised: Oct-11-09
File name: QF604.DWG
Plot scale: 1:1

NORFOLK DISTRICT
CORPS OF ENGINEERS
NORFOLK, VIRGINIA

NAO CENTER OF STANDARDIZATION

US ARMY STANDARD DESIGN
800 SOLDIER PERMANENT PARTY DINING FACILITY

FOOD SERVICE EQUIPMENT SCHEDULES

SHEET REFERENCE NUMBER
QF604
SHEET OF

					ELECTRICAL SCHEDULE							PLUMBING SCHEDULE									VENTILATION SCHEDULE							
ITEM NUMBER	QTY.	DESCRIPTION	EQUIP. CLASS	COMMENTS	ELEC. SYMBOL	VOLTS	PHASE	AMPS	CONN.	HT. A.F.F.	REMARKS	PLUMBING SYMBOL	H.W.	C.W.	WASTE SIZE	WASTE TYPE	GAS	GAS MBTU	HT. A.F.F.	REMARKS	VENTILATION SYMBOL	QTY.	EXHAUST COLLAR	EXHAUST CFM	SUPPLY COLLAR	SUPPLY CFM	STATIC PRESSURE	HT. A.F.F.
83	1	SANDWICH UNIT	A		83A	120	1	6.3	D.R.	4"																		
84	2	ICE AND SODA DISPENSERS	L	MANUAL LOAD ICE DISPENSERS W/ SODA VALVES	84A	120	1	15.0	F.R.	4"	TWO ICE AND SODA DISPENSERS. VERIFY ELECTRICAL REQUIREMENTS W/ VENDOR FURNISHED EQUIPMENT	84A		3/4"					S.U.	CONNECT TO CARBONATOR IN BASE OF COUNTER, TWO JUICE DISPENSERS – ITEM #82, TEA BREWER – ITEM #85, COFFEE BREWER – ITEM #95 AND TO CAPPUCCINO DISPENSER – ITEM #99. BACKFLOW PREVENTER REQUIRED ON CONNECTION TO CARBONATOR.								
					84B	120	1	15.0	F.R.	4"	CARBONATOR IN BASE OF COUNTER. VERIFY ELECTRICAL REQUIREMENTS W/ VENDOR FURNISHED EQUIPMENT	84B				F.F.D.			S.U.	EXTEND DRAIN LINES FROM TWO ICE AND SODA DISPENSERS AND FROM TWO DRIP TROUGHS IN BEVERAGE COUNTER – ITEM #81								
85	1	TEA BREWER	L		85A	120	1	15.0	D.R.	4"	VERIFY ELECTRICAL REQUIREMENTS W/ VENDOR FURNISHED EQUIPMENT	–		1/2"					34"	CONNECT C.W. FROM #84A								
86	1	MICROWAVE OVEN	C		86A	120	1	15.0	D.R.	4"																		
87	3	MILK DISPENSERS	C		87A	120	1	2.7	D.R.	48"		–																
					87B	120	1	2.7 + 2.7	D.R.	4"	TWO MILK DISPENSERS																	
88	6	CUP & GLASS RACK DISPENSERS	C																									
89	1	BREAD COUNTER	A		89A	120	1	10.0	D.R.	48"	CONVENIENCE RECEPTACLE																	
90	1	DISPLAY REFRIGERATOR	A		90A	120	1	10.4	D.R.	86"																		
91	2	FLOOR TROUGHS W/ GRATE	A									91A			2"	DIRECT			S.U.	CONNECT TO RECESSED TROUGH IN FLOOR – SEE DETAIL #D4/QF501								
92	2	ICE MAKING MACHINES	A		92A	208	3	12.8	J.B.	76"	CONNECT TO ICE MACHINE, AND FROM ICE MACHINE TO REMOTE CONDENSER ON BUILDING ROOF	92A			2"	F.F.D.			S.U.	EXTEND DRAIN LINES FROM ICE MAKER AND ICE BIN								
												92B		1/2"					60"	CONNECT TO WATER FILTER & FROM WATER FILTER TO ICE MACHINE. BACKFLOW PREVENTER REQUIRED.								
93	1	CEREAL DISPLAY RACK	L																									
94	3	CO2 TANK STORAGE RACKS	C																									
95	1	COFFEE BREWER	A	SATELLITE BREWER W/ (2) 3 GALLON REMOVABLE DISPENSERS	95A	120/208	3	38.3	J.B.	4"	CONNECT TO COFFEE BREWER.	–		1/2"					34"	CONNECT C.W. FROM #84A								
96	1	COFFEE URN	A	TWIN 6 GALLON CAPACITY, FIELD FEEDING AREA	96A	120/208	1	36.0	J.B.	48"	CONNECT TO COFFEE URN	96A		1/2"					48"	CONNECT TO COFFEE URN								
97	1	URN STAND	A	FIELD FEEDING AREA								97A								NOT USED								
98	1	BULK JUICE DISPENSER	L	FIELD FEEDING AREA	98A	120	1	10.0	D.R.	24"	VERIFY ELECTRICAL REQUIREMENTS W/ VENDOR FURNISHED EQUIPMENT																	
99	2	CAPPUCCINO DISPENSERS	L		99A	120	1	15.0	D.R.	48"	VERIFY ELECTRICAL REQUIREMENTS W/ VENDOR FURNISHED EQUIPMENT	99A		1/2"					18"	CONNECT TO CAPPUCCINO DISPENSER AND TO JUICE DISPENSER – ITEM #82								
					99B	120	1	15.0	D.R.	4"	VERIFY ELECTRICAL REQUIREMENTS W/ VENDOR FURNISHED EQUIPMENT	–		1/2"					34"	CONNECT TO CAPPUCCINO DISPENSER AND TO JUICE DISPENSER – CONNECT C.W. FROM #84A								
100	1	ICE CREAM CABINET	L		100A	120	1	10.0	D.R.	24"	VERIFY ELECTRICAL REQUIREMENTS W/ VENDOR FURNISHED EQUIPMENT																	
101	1	SOILED TRAY CONVEYOR	A		101A	120	1	15.0	J.B.	24"	CONNECT TO CONTROL PANEL & FROM CONTROL PANEL TO CONVEYOR MOTOR	101A			2"	F.F.D.				EXTEND DRAIN LINES FROM CONVEYOR BED AND RECESS BELOW ROLLERS								
102	1	RACK SHELF	A																									
103	2	SILVERWARE SOAK SINKS	C																									
104	1	DISHWASHING MACHINE	A		104A	480	3	47.6	J.B.	66"	CONNECT TO CONTROL PANEL ON TOP OF DISHWASHER	104A			2"	F.F.D.			S.U.	EXTEND DRAIN LINES FROM SIDE LOADER AND FROM RECESS BELOW ROLLERS ON SOILED TRAY CONVEYOR – ITEM #101								
					104B	120	1	10.0	D.R.	66"	DETERGENT DISPENSER BY VENDOR	104B	3/4"						12"	180 DEGREES F. MIN. H.W. INLET ON DISHWASHER. CONNECT FROM BOOSTER HEATER H.W. OUTLET #105A WITH INSULATED LINE								
												104C			3"	12" X 12" F.S.			S.U.	EXTEND DRAIN LINES FROM DISHWASHER, FROM CLEAN DISH TABLE – ITEM #106 AND FROM DRAIN VALVE AND TEMPERATURE/PRESSURE RELIEF VALVE ON BOOSTER HEATER – ITEM #105								
105	1	BOOSTER HEATER	A	FOR DISHWASHER	105A	480	3	21.7	J.B.	18"	CONNECT TO BOOSTER HEATER	105A	3/4"						6"	180 DEGREES F. MIN. H.W. OUTLET ON BOOSTER HEATER. CONNECT TO H.W. INLET #104B ON DISHWASHER WITH INSULATED LINE								
												105B	3/4"						12"	CONNECT TO BOOSTER HEATER. (140 DEGREES F. MIN.) 132 G.P.H. AT 20 P.S.I. FLOW PRESSURE REQUIRED								
												–			(2) 3/4"	INDIRECT			4"/22"	EXTEND DRAIN LINES FROM DRAIN VALVE AND TEMPERATURE/PRESSURE RELIEF VALVE TO #104C								
106	1	CLEAN DISH TABLE	A									–			1–1/2"	INDIRECT			34"	EXTEND DRAIN LINE TO #104C								
107	2	VENT DUCT EXTENSIONS	A																		107A	1	4" X 16"	400				6" ABOVE CEILING
																					107B	1	4" X 16"	200				6" ABOVE CEILING
108	2	RACK DOLLIES	C																									

US Army Corps of Engineers
Norfolk District

MARK	DATE	DESCRIPTION	BY	APP

DATE: 12/11/09
SCALE: NONE
NORFOLK DISTRICT FILE NO. —
SPECIFICATION NO. —
PROJECT NO. —
DRAWING NO. QF605
Last saved on 12-11-09
Plot scale: 1:1
File name: QF605.DWG

DESIGNED: JK
DRAWN: JK,TJT
CHECKED: JK
SUBMITTED: JK

NORFOLK DISTRICT
CORPS OF ENGINEERS
NORFOLK, VIRGINIA

NAO CENTER OF STANDARDIZATION

US ARMY STANDARD DESIGN
800 SOLDIER PERMANENT PARTY DINING FACILITY

FOOD SERVICE EQUIPMENT SCHEDULES

SHEET REFERENCE NUMBER
QF605
SHEET OF

					ELECTRICAL SCHEDULE							PLUMBING SCHEDULE									VENTILATION SCHEDULE							
ITEM NUMBER	QTY.	DESCRIPTION	EQUIP. CLASS	COMMENTS	ELEC. SYMBOL	VOLTS	PHASE	AMPS	CONN.	HT. A.F.F.	REMARKS	PLUMBING SYMBOL	H.W.	C.W.	WASTE SIZE	WASTE TYPE	GAS	GAS MBTU	HT. A.F.F.	REMARKS	VENTILATION SYMBOL	QTY.	EXHAUST COLLAR	EXHAUST CFM	SUPPLY COLLAR	SUPPLY CFM	STATIC PRESSURE	HT. A.F.F.
109	2	SERVICE SINKS (FLOOR MOUNTED)	A									109A		1/2"					36"	CONNECT TO FAUCET, INLETS 8" O.C.								
												109B			3"	DIRECT			S.U.	CONNECT TO SINK								
												109C	1/2"						36"	CONNECT TO FAUCET, INLETS 8" O.C.								
110	1	HOT FOOD WARMER (3 WELLS)	A		110A	208	1	12.3	S.R.	4"	NEMA #L6-20P PLUG FURNISHED ON HOT FOOD WARMER	–			3/4"	INDIRECT			25"	EXTEND DRAIN LINE TO #58A								
111	1	FOOD BAR COUNTER	A																									
112	1	WORK COUNTER	A		112A	120	1	10.0	D.R.	48"	CONVENIENCE RECEPTACLE	112A			2"	12" X 12" F.S.			S.U.	EXTEND DRAIN LINE FROM SINK								
												112B		1/2"					18"	CONNECT TO FAUCET								
												112C	1/2"						18"	CONNECT TO FAUCET								
113	1	CLEAN/SANITIZING MACHINE	C		113A	120	1	15.0	D.R.	18"	LOCATED NEAR FAUCET HOSE STATIONS – ITEM #9 AND SERVICE SINKS – ITEM #109 (4 PLACES)																	
114	2	DISH CARTS	C																									
115	2	PULP CONTAINERS	C																									
116	1	WALL MOUNTED FLAT SHELF	A																									
117	6	TRAY DISPENSERS	C																									
118	6	BREAD RACKS	L																									
119	1	PROOFING CABINET	C		119A	120	1	16.6	J.B.	–	PROVIDE J.B. ABOVE CEILING & PENDANT CORD WITH D.R. AT 78" A.F.F.																	
120	8	SYRUP BOX RACKS	L		120A	120	1	10.0	D.R.	24"	CONVENIENCE RECEPTACLE																	
121	–	NOT USED	–																									
122	4	OPEN RACKS	C																									
123	1	UTENSIL TABLE	A																									
124	4	UTILITY CARTS	C																									
125	1	COOK & HOLD CABINET	A		125A	208	1	28.8	J.B.	–	PROVIDE J.B. ABOVE CEILING & PENDANT CORD WITH S.R. AT 78" A.F.F. ALSO FURNISH & INSTALL CORD & PLUG ON CABINET TO MATCH RECEPTACLE.																	
126	1	PREP SINK	A		126A	120	1	15.0	J.B.	–	PROVIDE J.B. ABOVE CEILING & PENDANT CORD WITH CONVENIENCE D.R. AT 78" A.F.F.	126A	3/4"						S.U.	CONNECT TO FAUCET AND TO FAUCET ON ITEM #21 – TABLE W/ SINK								
												126B		3/4"					S.U.	CONNECT TO FAUCET AND TO FAUCET ON ITEM #21 – TABLE W/ SINK								
												126C			3"	12" X 12" F.S.			S.U.	EXTEND DRAIN LINES FROM TWO SINKS AND FROM SINK ON ITEM #21 – TABLE W/ SINK								
127	1	CARVING STATION W/ HOLDING CABINET	A		127A	120	1	8.6	D.R.	24"																		
128	–	NOT USED	–																									
129	1	GRILL/ACTION STATION	A		129A	120	1	10.0 + 10.0	J.B.	4"	CONNECT TO J.B. IN BASE FOR 2 P.W. CONVENIENCE D.R.'S IN COUNTER																	
130	1	COLD PAN (2 WELLS)	A		130A	120	1	6.0	D.R.	4"		130A			2"	F.F.D.			S.U.	EXTEND DRAIN LINE FROM COLD PAN								
131	2	HOT FOOD WARMER (4 WELLS)	A		131A	208	1	16.3	S.R.	4"	NEMA #L6-30P PLUG FURNISHED ON HOT FOOD WARMER	131A			2"	F.F.D.			S.U.	EXTEND DRAIN LINE FROM DRAIN VALVE ON HOT FOOD WARMER								
												131B	1/2"						S.U.	CONNECT TO FILL FAUCET								
132	1	ROTISSERIE OVEN W/ VENTLESS HOOD	A		132A	208	3	34.0	S.R.	24"	ROTISSERIE OVEN AND VENTLESS HOOD. PROVIDE CORD AND PLUG W/ MATCHING RECEPTACLE																	
					132B	120	1	14.6	D.R.	24"	NEMA #5-20P PLUG FURNISHED ON HEATED HOLDING CABINET																	
133	1	WORK COUNTER	A		133A	120	1	10.0	D.R.	48"	CONVENIENCE RECEPTACLE	133A		1/2"					18"	CONNECT TO FAUCET								
												133B			2"	12" X 12" F.S.			S.U.	EXTEND DRAIN LINE FROM SINK								
												133C	1/2"						18"	CONNECT TO FAUCET								
134	1	GRILL COUNTER	A		134A	120	1	10.0 + 10.0	J.B.	4"	CONNECT TO J.B. IN BASE FOR 2 P.W. CONVENIENCE D.R.'S IN COUNTER																	
135	1	PASS THRU FREEZER	A		135A	120	1	11.9	D.R.	88"																		
136	1	WORK COUNTER	A		136A	120	1	10.0	D.R.	48"	CONVENIENCE RECEPTACLE																	
137	1	PIZZA ASSEMBLY TABLE	A		137A	120	1	15.0	D.R.	18"																		
138	1	CONVEYOR PIZZA OVEN	A	DOUBLE DECK	138A	208	1	29.0	J.B.	48"	CONNECT TO CONVEYOR PIZZA OVEN																	
139	1	EXHAUST HOOD – WALL TYPE	A	UV TYPE	139A	120	1	1.0	J.B.	48"	PROVIDE SWITCH IN WALL AT 48" A.F.F. AND EXTEND CONDUIT & WIRING IN A CONCEALED MANNER TO J.B. ON TOP EXTERIOR OF EXHAUST HOOD FOR INCANDESCENT HOOD LIGHTS										139A	1	10" X 8"	1,020			1.60"	108"
					139B	120	1	6.0	J.B.	108"	CONNECT TO UV CONTROL BOX ON TOP OF EXHAUST HOOD FOR UV LIGHTS. SEE UV WIRING SCHEMATIC DETAIL #C1/QF503										139B	1			12" X 15"	815	0.20"	108"
140	1	FIRE SUPPRESSION SYSTEM	A	SERVES EXHAUST HOODS #71, 71a & #139	140A	120	1	20.0	J.B.	96"	CONNECT TO MICROSWITCH ON WET CHEMICAL FIRE SUPPRESSION SYSTEM & RUN CONDUIT AND WIRE IN A CONCEALED MANNER TO FUEL AND POWER SHUT-OFF DEVICES FOR ALL APPLIANCES LOCATED UNDER THE EXHAUST HOODS. THIS SYSTEM SERVES ITEMS #71, #71a AND #139. ALSO CONNECT TO BUILDING FIRE ALARM SYSTEM AS REQUIRED.																	
					140B				J.B.	48"	PROVIDE CONCEALED CONDUIT AND RECESSED JUNCTION BOX IN WALL FOR REMOTE MANUAL PULL STATION FOR FIRE SUPPRESSION SYSTEM. SEE DETAIL #A2/QF502																	

US Army Corps of Engineers
Norfolk District

MARK	DATE	DESCRIPTION	BY	APP

DATE: 12/11/09
SCALE: NONE
NORFOLK DISTRICT FILE NO. —
SPECIFICATION NO. —
Plot scale: 1:1

CHECKED: JK
SUBMITTED: JK
DESIGNED: JK
DRAWN: JK,TJT
PROJECT NO. —
DRAWING NO. QF606
Last saved on 12-11-09
File name: QF606.DWG

NORFOLK DISTRICT
CORPS OF ENGINEERS
NORFOLK, VIRGINIA

NAO CENTER OF STANDARDIZATION

US ARMY STANDARD DESIGN
800 SOLDIER PERMANENT PARTY DINING FACILITY

FOOD SERVICE EQUIPMENT SCHEDULES

SHEET REFERENCE NUMBER
QF606
SHEET OF

					ELECTRICAL SCHEDULE							PLUMBING SCHEDULE									VENTILATION SCHEDULE							
ITEM NUMBER	QTY.	DESCRIPTION	EQUIP. CLASS	COMMENTS	ELEC. SYMBOL	VOLTS	PHASE	AMPS	CONN.	HT. A.F.F.	REMARKS	PLUMBING SYMBOL	H.W.	C.W.	WASTE SIZE	WASTE TYPE	GAS	GAS MBTU	HT. A.F.F.	REMARKS	VENTILATION SYMBOL	QTY.	EXHAUST COLLAR	EXHAUST CFM	SUPPLY COLLAR	SUPPLY CFM	STATIC PRESSURE	HT. A.F.F.
141	1	PIZZA OVEN COUNTER	A		141A	120	1	10.0	D.R.	48"	CONVENIENCE RECEPTACLE																	
142	1	REFRIGERATOR	A	ONE SECTION REACH-IN	142A	120	1	8.0	D.R.	86"																		
143	1	PIZZA WARMING SHELF	A		143A	120	1	12.0	D.R.	4"																		
144	1	PIZZA AND DELI COUNTER	A		144A	120	1	10.0 + 10.0	J.B.	4"	CONNECT TO J.B. IN BASE FOR 2 P.W. CONVENIENCE D.R.'S IN COUNTER																	
145	1	SOFT SERVE MACHINE	A		145A	208	3	14.0	J.B.	4"	PROVIDE CORD, PLUG AND MATCHING RECEPTACLE & CONNECT TO LEFT CONNECTION ON MACHINE	145A	1/2"						S.U.	PROVIDE FLEXIBLE HOSE W/ QUICK DISCONNECT & CONNECT TO FAUCET ON SOFT SERVE MACHINE								
					145B	208	3	13.0	J.B.	4"	PROVIDE CORD, PLUG AND MATCHING RECEPTACLE & CONNECT TO RIGHT CONNECTION ON MACHINE	145B		1/2"					S.U.	PROVIDE FLEXIBLE HOSE W/ QUICK DISCONNECT & CONNECT TO FAUCET ON SOFT SERVE MACHINE								
146	1	REFRIGERATOR	A	ONE SECTION REACH-IN	146A	120	1	8.0	D.R.	86"																		
147	4	POS MACHINES	C		147A	120	1	10.0	D.R.	18"	DEDICATED CIRCUIT REQUIRED. ALSO PROVIDE NETWORK CONNECTION																	
					147B	120	1	10.0	D.R.	4"	DEDICATED CIRCUIT REQUIRED. ALSO PROVIDE NETWORK CONNECTION																	
148 TO 151 NOT USED																												
152	1	WASTE COOKING OIL STORAGE TANK	A		152A	120	1	20.0	D.R.	18"		152A							42"	PLUMB. SEC. TO FURNISH AND INSTALL 3/4" BLACK IRON OR GALVANIZED PIPING (NOT COPPER) FROM WASTE COOKING OIL STORAGE TANK TO REMOTE QUICK CONNECT FITTING - SEE DETAIL #B1/QF504.								
153	1	WASTE COOKING OIL CADDY	A																									
154	1	WORK TABLE	A		154A	120	1	10.0	D.R.	48"	CONVENIENCE RECEPTACLE	154A		1/2"					18"	CONNECT TO FAUCET								
												154B			2"	12"X12" F.S.			S.U.	EXTEND DRAIN LINE FROM SINK								
												154C	1/2"						18"	CONNECT TO FAUCET								
155	1	CAN CRUSHER	A		155A	120	1	20.0	D.R.	48"																		
156	4	RECYCLING BINS	C																									
CARRY OUT AREA																												
C1	1	HAND SINK	A									C1A		1/2"					24"	CONNECT TO FAUCET								
												C1B			1-1/2"	DIRECT			20"	CONNECT TO SINK								
												C1C	1/2"						24"	CONNECT TO FAUCET								
C2	4	SHELVING UNITS	C	18" X 48" MOBILE SHELVING UNITS																								
C3	1	WORK TABLE W/ SINK	A		C3A	120	1	10.0	D.R.	48"	CONVENIENCE RECEPTACLE	C3A		1/2"					18"	CONNECT TO FAUCET								
												C3B			2"	12" X 12" F.S.			S.U.	EXTEND DRAIN LINE FROM SINK								
												C3C	1/2"						18"	CONNECT TO FAUCET								
C4	1	HEATED CABINET	A	PORTABLE	C4A	120	1	16.0	D.R.	24"	NEMA #5-20P PLUG FURNISHED ON HEATED CABINET																	
C5	1	FOOD WARMER, DRAWER TYPE	A	MOUNTED ON ELEVATED SHELF	C5A	208	1	17.3	S.R.	56"	NEMA #L6-30P PLUG FURNISHED ON FOOD WARMER																	
C6	1	CONVEYOR TOASTER & STAND	C		C6A	208	1	16.0	S.R.	24"	NEMA #6-20P PLUG FURNISHED ON CONVEYOR TOASTER. VERIFY ELECT. REQUIREMENTS WITH GOVERNMENT FURNISHED EQUIPMENT.																	
C7	1	WORK TABLE	A		C7A	120	1	10.0	D.R.	48"	CONVENIENCE RECEPTACLE	C7A			2"	F.F.D.			S.U.	EXTEND DRAIN LINE FROM DRIP TROUGH IN TABLE								
C8	2	SANDWICH REFRIGERATORS	A		C8A	120	1	6.3	D.R.	18"																		
C9	1	MICROWAVE OVEN	C	MOUNTED ON ELEVATED SHELF	C9A	120	1	15.0	D.R.	56"																		
C10	1	EXHAUST HOOD - ISLAND TYPE	A	(1) SECTION UV TYPE	C10A	120	1	4.0	J.B.	48"	PROVIDE SWITCH IN WALL AT 48" A.F.F. AND EXTEND CONDUIT & WIRING IN A CONCEALED MANNER TO J.B. ON TOP EXTERIOR OF HOOD FOR INCANDESCENT HOOD LIGHTS										C10A	1	10" X 29"	3,570			1.60"	108"
					C10B	120	1	12.0	E.C.	104"	CONNECT TO UV CONTROL BOX ON TOP OF EXHAUST HOOD SECTION FOR UV LIGHTS. SEE UV WIRING SCHEMATIC DETAIL #C1/QF503										C10B	2			12" X 24"	1,430 EA.	0.20"	108"
					C10C	120	1	20.0	E.C.	60"	CONNECT TO UV CONTROL PANEL. ALSO PROVIDE CONTROL INTERWIRING FROM CONTROL PANEL TO UV CONTROL BOX ON TOP OF EXHAUST HOOD, TO EXHAUST FAN, TO MAKE-UP AIR UNIT & TO FIRE SUPPRESSION SYSTEM - ITEM #C11 AS REQUIRED. SEE UV WIRING SCHEMATIC DETAIL #C1/QF503																		
C11	1	FIRE SUPPRESSION SYSTEM	A	SERVES EXHAUST HOOD #C10	C11A	120	1	20.0	J.B.	96"	CONNECT TO MICROSWITCH ON WET CHEMICAL FIRE SUPPRESSION SYSTEM & RUN CONDUIT AND WIRE IN A CONCEALED MANNER TO FUEL AND POWER SHUT-OFF DEVICES FOR ALL APPLIANCES LOCATED UNDER THE EXHAUST HOOD. THIS SYSTEM SERVES ITEM #C10.																		
					C11B				J.B.	48"	PROVIDE CONCEALED CONDUIT AND RECESSED JUNCTION BOX IN WALL FOR REMOTE MANUAL PULL STATION FOR FIRE SUPPRESSION SYSTEM. SEE DETAIL #A2/QF502																	

US Army Corps of Engineers
Norfolk District

MARK	DATE	DESCRIPTION	BY	APP

DATE: 12/11/09
SCALE: NONE
CHECKED: JK
SUBMITTED: JK
NORFOLK DISTRICT FILE NO. —
SPECIFICATION NO.
DESIGNED: JK
DRAWN: JK,TJT
PROJECT NO. —
DRAWING NO. QF607
Last Revised: 12-11-09
File name: QF607.DWG
Plot scale: 1:1

NORFOLK DISTRICT
CORPS OF ENGINEERS
NORFOLK, VIRGINIA

NAO CENTER OF STANDARDIZATION

US ARMY STANDARD DESIGN
800 SOLDIER PERMANENT PARTY DINING FACILITY

FOOD SERVICE EQUIPMENT SCHEDULES

SHEET REFERENCE NUMBER
QF607
SHEET OF

					ELECTRICAL SCHEDULE							PLUMBING SCHEDULE									VENTILATION SCHEDULE							
ITEM NUMBER	QTY.	DESCRIPTION	EQUIP. CLASS	COMMENTS	ELEC. SYMBOL	VOLTS	PHASE	AMPS	CONN.	HT. A.F.F.	REMARKS	PLUMBING SYMBOL	H.W.	C.W.	WASTE SIZE	WASTE TYPE	GAS	GAS MBTU	HT. A.F.F.	REMARKS	VENTILATION SYMBOL	QTY.	EXHAUST COLLAR	EXHAUST CFM	SUPPLY COLLAR	SUPPLY CFM	STATIC PRESSURE	HT. A.F.F.
C12	2	FRYERS W/ FILTER	A		C12A	120	1	1.0 + 1.0	D.R.	18"	FRYER CONTROLS	C12A					1"	268 TOTAL	30"	MANIFOLD 2 FRYERS TOGETHER & CONNECT TO GAS SUPPLY WITH FLEXIBLE CONNECTOR ASSEMBLY FURNISHED WITH EQUIPMENT. SEE DETAIL #A4/QF502								
					C12B	120	1	5.6 + 4.0	D.R.	18"	FILTER PUMP & HEAT LAMPS																	
C13	1	GRIDDLE & STAND	A									C13A					3/4"	120	30"	CONNECT TO GAS SUPPLY WITH FLEXIBLE CONNECTOR ASSEMBLY FURNISHED WITH EQUIPMENT. SEE DETAIL #A4/QF502								
C14	1	BREAD RACK	L																									
C15	2	POS MACHINES	C		C15A	120	1	10.0	D.R.	48"	DEDICATED CIRCUIT REQUIRED. ALSO PROVIDE NETWORK CONNECTION																	
					C15B	120	1	10.0	D.R.	4"	DEDICATED CIRCUIT REQUIRED. ALSO PROVIDE NETWORK CONNECTION																	
C16	1	SERVING COUNTER	A		C16A	120	1	10.0 + 10.0	J.B.	18"	CONNECT TO J.B. IN BASE FOR 2 P.W. CONVENIENCE D.R.'S IN COUNTER	C16A			2"	F.F.D.			S.U.	EXTEND DRAIN LINES FROM TWO TROUGHS IN COUNTER, FROM DRAIN VALVE ON HOT FOOD WARMER – ITEM #C19 AND FROM ICE AND SODA DISPENSER – ITEM #C38								
					C16B	120	1	10.0	J.B.	4"	CONNECT TO J.B. IN BASE FOR P.W. CONVENIENCE D.R. IN COUNTER																	
C17	1	COMBINATION OVEN/STEAMER	A	SINGLE COMPARTMENT, (5) 13" X 18" SHEET PANS OR (5) 12" X 20" X 2 1/2" DEEP PANS	C17A	208	3	26.0	J.B.	30"	CONNECT TO COMBINATION OVEN/STEAMER	C17A			2"	12" X 12" F.S.			S.U.	EXTEND DRAIN LINE FROM COMBINATION OVEN/STEAMER								
												C17B		3/4"					30"	CONNECT THROUGH WALL-MOUNTED WATER FILTER TO COMBINATION OVEN/STEAMER. 40-50 P.S.I. REQUIRED. WATER FILTER FURNISHED WITH EQUIPMENT & MOUNTED TO WALL AT 48" A.F.F. BACKFLOW PREVENTER REQUIRED.								
C18	–	NOT USED	–																									
C19	1	HOT FOOD WARMER (4 WELLS)	A		C19A	208	1	16.3	S.R.	4"	NEMA #L6-30P PLUG FURNISHED ON FOOD WARMER	–			3/4"	INDIRECT			25"	EXTEND DRAIN LINE TO #C16A								
												C19A	1/2"						S.U.	CONNECT TO FILL FAUCET								
C20	2	COUNTER PROTECTORS	A		C20A	120	1	3.0	J.B.	4"	CONNECT TO FLUORESCENT LIGHTS IN COUNTER PROTECTOR																	
					C20B	120	1		J.B.	18"	CONNECT TO FLUORESCENT LIGHTS IN COUNTER PROTECTOR																	
C21	1	DISPLAY FREEZER	A	TWO SECTION, REACH-IN	C21A	120	1	14.9	D.R.	86"	NEMA #5-20P PLUG FURNISHED ON DISPLAY FREEZER																	
C22	1	DISPLAY REFRIGERATOR	A	TWO SECTION, REACH-IN	C22A	120	1	10.4	D.R.	86"																		
C23	4	CUP/LID DISPENSERS	A																									
C24	2	COFFEE BREWERS	L		C24A	120/208	1	30.0	J.B.	48"	CONNECT TO COFFEE BREWER. VERIFY ELECTRICAL REQUIREMENTS W/ VENDOR FURNISHED EQUIPMENT	C24A		1/2"					48"	CONNECT TO COFFEE BREWER								
					C24B	120/208	1	30.0	J.B.	4"	CONNECT TO COFFEE BREWER. VERIFY ELECTRICAL REQUIREMENTS W/ VENDOR FURNISHED EQUIPMENT																	
C25	2	CONDIMENT RACKS	C																									
C26	1	BASKET COUNTER	A		C26A	120	1	10.0	D.R.	48"	CONVENIENCE RECEPTACLE																	
C27	–	NOT USED	–		C27A						NOT USED																	
C28	1	WRAPPING COUNTER	A		C28A	120	1	10.0	D.R.	48"	CONVENIENCE RECEPTACLE																	
C29	1	BEVERAGE/CASHIER COUNTER	A		C29A	120	1	10.0	D.R.	48"	CONVENIENCE RECEPTACLE																	
C30	1	REFRIGERATOR, REACH-IN	A	TWO SECTION, REACH-IN	C30A	120	1	10.4	D.R.	86"																		
C31	1	FREEZER, REACH-IN	A	TWO SECTION, REACH-IN	C31A	120	1	14.9	D.R.	86"	NEMA #5-20P PLUG FURNISHED ON FREEZER																	
C32	1	WORK TABLE	C		C32A	120	1	10.0	D.R.	48"	CONVENIENCE RECEPTACLE																	
C33	2	REFRIGERATORS, REACH-IN	A	ONE SECTION, REACH-IN	C33A	120	1	8.0	D.R.	86"																		
C34	1	TRASH BIN	C																									
C35	1	ANGLE RACK	C																									
C36	1	UTILITY CART	C																									
C37	1	FREEZER, REACH-IN	A	ONE SECTION, REACH-IN	C37A	120	1	11.5	D.R.	18"																		
C38	1	ICE AND SODA DISPENSER	L	MANUAL LOAD ICE DISPENSER W/ SODA VALVES	C38A	120	1	15.0	F.R.	4"	ICE AND SODA DISPENSER AND CARBONATOR IN BASE OF COUNTER. VERIFY ELECTRICAL REQUIREMENTS W/ VENDOR FURNISHED EQUIPMENT	C38A		3/4"					S.U.	CONNECT TO CARBONATOR IN BASE OF COUNTER, COFFEE BREWER – ITEM #C24, TEA BREWER – ITEM #C40 AND TO JUICE DISPENSER – ITEM #C41. BACKFLOW PREVENTER REQUIRED ON CONNECTION TO CARBONATOR.								
C39	–	NOT USED	–																									
C40	2	TEA BREWERS	L		C40A	120	1	15.0	D.R.	48"	VERIFY ELECTRICAL REQUIREMENTS W/ VENDOR FURNISHED EQUIPMENT																	
					C40B	120	1	15.0	D.R.	4"	VERIFY ELECTRICAL REQUIREMENTS W/ VENDOR FURNISHED EQUIPMENT																	
C41	2	JUICE DISPENSERS, CONCENTRATE	L		C41A	120	1	15.0	D.R.	48"	VERIFY ELECTRICAL REQUIREMENTS W/ VENDOR FURNISHED EQUIPMENT																	
					C41B	120	1	15.0	D.R.	4"	VERIFY ELECTRICAL REQUIREMENTS W/ VENDOR FURNISHED EQUIPMENT																	
C42	1	SYRUP BOX SHELVING UNIT	L									C42A			2"	F.D.			S.U.									
C43	1	ICE/SODA DISPENSER	L		C43A	120	1	15.0	F.R.	18"	TRANSFORMER FOR SODA DISPENSING HEADS AND CARBONATOR IN BASE OF COUNTER. VERIFY ELECTRICAL REQUIREMENTS W/ VENDOR FURNISHED EQUIPMENT	C43A			F.F.D.				S.U.	EXTEND DRAIN LINE FROM ICE AND SODA DISPENSER								
												C43B		1/2"					18"	CONNECT TO CARBONATOR IN BASE OF COUNTER, TO TEA BREWER – ITEM #C40 AND TO JUICE DISPENSER – ITEM #C41. BACKFLOW PREVENTER REQUIRED ON CONNECTION TO CARBONATOR.								

US Army Corps of Engineers
Norfolk District

MARK	DATE	DESCRIPTION	BY	APP

DATE: 12/11/09
SCALE: NONE
DESIGNED: JK
CHECKED: JK
DRAWN: JK,TJT
SUBMITTED: JK
PROJECT NO. –
NORFOLK DISTRICT FILE NO. –
SPECIFICATION NO. –
DRAWING NO. QF608
Last Revised: Jan 20, 2011-09
File name: QF608.DWG
Plot scale: 1:1

NORFOLK DISTRICT
CORPS OF ENGINEERS
NORFOLK, VIRGINIA

NAO CENTER OF STANDARDIZATION

US ARMY STANDARD DESIGN
800 SOLDIER PERMANENT PARTY DINING FACILITY

FOOD SERVICE EQUIPMENT SCHEDULES

SHEET REFERENCE NUMBER
QF608
SHEET OF